"Apollo" Valves | INDUSTRIAL PRODUCTS

technical sheets

www.apollovalves.com

customer service 704.841.6000

IPCA9000

aalberts integrated piping systems

INDUSTRIAL PRODUCTS

CONTENTS

INTRODUCTION

TABLE OF CONTENTS BY SERIES NO.
APOLLO NUMBERING SYSTEM
WARRANTY & TERMS OF SALE

BALL VALVES

SECTION A - 2-PIECE
SECTION B - 3-PIECE
SECTION C - UNI-BODY
SECTION D - ASME FLANGED
SECTION E - 3-WAY
SECTION F - UNION END
SECTION G - STEAM PREP
SECTION H - SPECIALTY
SECTION J - OPTIONAL CONFIGURATIONS
SECTION M - ENGINEERING DATA
SECTION N - TOP ENTRY

NEEDLE VALVES

SECTION P - METAL SEATED, GLOBE PATTERN, VEE-TIP

ACTUATION

SECTION R - ACTUATORS

BUTTERFLY VALVES

SECTION S - HIGH PERFORMANCE BUTTERFLY VALVES

LEADFREE CERTIFIED

LEADFREE OPTIONS

THROUGHOUT THIS CATALOG, PRODUCTS THAT ARE CERTIFIED **LEAD FREE*** OR HAVE A **LEAD FREE*** OPTION WILL BE IDENTIFIED WITH THESE LOGOS.

*LEAD FREE: The wetted surfaces of this product shall contain no more than 0.25% lead by weighted average. Complies with Federal Public Law 111-380. ANSI 3rd party approved and listed.

Conbraco Industries offers a wide range of Apollo® products for potable and non-potable applications. When the use of lead free valves is required by code, specification or legislation, it is the sole responsibility of our customers to ensure that only lead free Apollo® products are installed in systems intended for potable water service. Further information related to our product offering and the U.S. Safe Drinking Water Act (SDWA) is available at www.apollovalves.com/lead_free or by contacting Conbraco Customer Service.

**Any imported products will be clearly identified as “Apollo International™” or “Conbraco International™” .

TABLE OF CONTENTS

SERIES NUMBER

60A-100 Series P-3
60A-700 Series P-4
60B-100/200 Series P-5
60B-700/800 Series P-6
7A-130-26 Series H-3
7H-800 Series H-4
7K-100 Series H-5
7K-100-SV Series H-10
70-100 Series A-3
70LF-100 Series A-4
70B-140 Series A-5
70-200 Series A-6
70LF-200 Series A-7
70-300 Series F-3
70-400 Series F-4
70-600 Series E-3
70-800 Series A-8
70-900 Series E-4
71-100 Series A-9
71-AR Series A-10
71-500 Series H-6
72-100-A Series A-11
72-900-A Series A-12
73A-100 Series A-13
73-300 Series F-5, H-17
73-400 Series F-6, H-18
74-100 Series H-7
75-100 Series H-8
76-100 Series A-14-16
76-AR Series A-17
76-300 Series F-7
76-400 Series F-8
76-500 Series H-9
76-600 Series E-5
76F-100-A Series A-18
76FJ-100-A Series A-19
76FK-100-A Series A-20
76J-100 Series A-21-23
76J-AR Series A-24
76K-100 Series A-25-27
76K-AR Series A-28
77-100 Series A-29
77-100-SV Series H-11
77-AR Series A-32
77-200 Series A-30
77-640 Series E-6
77-900 Series A-31
77D-14X Series A-33
78-124 & 78-125 Series H-12
78-248, 250, 256, 438 Series H-13
78-257 Thru 78-267 Series H-14
78-621 Thru 78-625 Series H-15
82-100/82A-140 Series B-3
82LF-100/140 Series B-4
82-200/82A-240 Series B-5
82LF-200/240 Series B-6
83A-140 Series B-7
83A-240 Series B-8
83A-340 Series B-9
83A-440 Series B-10
83A-540 Series B-11
83A-640 Series B-12
83B-140 Series B-13
83B-240 Series B-14
83B-340 Series B-15
83B-440 Series B-16
83B-540 Series B-17
83B-640 Series B-18
83L-140 Series B-19
83L-240 Series B-20
83L-340 Series B-21
83L-440 Series B-22
83L-540 Series B-23
83L-640 Series B-24
83R-140 Series B-63-64
83R-240 Series B-65-66
83R-740 Series B-67
86A-100 Series B-25
86A-200 Series B-26
86A-300 Series B-27
86A-400 Series B-28
86A-500 Series B-29
86A-600 Series B-30
86B-100 Series B-31
86B-200 Series B-32
86B-300 Series B-33
86B-400 Series B-34
86B-500 Series B-35
86B-600 Series B-36
86C-100 Series B-37
86C-200 Series B-38
86C-300 Series B-39
86C-400 Series B-40
86C-500 Series B-41
86C-600 Series B-42
86D-100 Series B-43
86D-200 Series B-44
86G-100 Series B-45
86G-200 Series B-46
86G-300 Series B-47
86G-400 Series B-48
86G-500 Series B-49
86G-600 Series B-50
86J-100 Series B-51
86J-200 Series B-52
86J-300 Series B-53
86J-400 Series B-54
86J-500 Series B-55
86J-600 Series B-56
86K-100 Series B-57
86K-200 Series B-58
86K-300 Series B-59
86K-400 Series B-60
86K-500 Series B-61
86K-600 Series B-62
86R-100 Series B-68-69
86R-200 Series B-70-71
86R-700 Series B-72
87A-100 Series D-5-8
87A-200 Series D-9-12
87A-400 Series D-89-91
87A-500 Series D-92-94
87A-700 Series D-13-16
87A-900 Series D-17-20
87A-F00 Series D-95-99
87B-100 Series D-21-22
87J-100 Series D-23-26
87J-200 Series D-27-30
87J-700 Series D-31-34
87J-900 Series D-35-38
87K-100 Series D-39-42
87K-200 Series D-43-46
87K-700 Series D-47-50
87K-900 Series D-51-54
88A-100 Series D-55-58
88A-200 Series D-59-62
88A-700 Series D-63-66
88A-900 Series D-67-70
88A-F00 Series D-100-104
88B-100 Series D-71-72
88L-140 Series D-73-76
88L-240 Series D-77-80
88L-740 Series D-81-84
88L-940 Series D-85-88
88L-F40 Series D-105-109
89-100 Series A-34-36
89-AR Series A-37
89-500 Series H-16
9A-100 Series C-3
90-100 Series C-4
92-100 Series C-5
93-100 Series C-6
96-100 Series C-7
96J-100 Series C-8
96K-100 Series C-9
215L/215W Series S-6
230L/230W Series S-7
260L/260W Series S-8
399-100 Series A-38-39
489-100 Series H-19

APOLLO NUMBERING SYSTEM

PLEASE USE ALL DIGITS WHEN ORDERING.

00-000-00

MATERIAL OR STYLE

2-PIECE & UNIBODY VALVES	
70	Bronze
71	Bronze with Pads
72-A	Carbon Steel (Forged Body)
73	Carbon Steel
73A	A105 Carbon Steel
74	Nickel
75	Pad-Locking Bronze
76	CF8M Stainless Steel
76F	CF8M Stainless Steel, Full Port
77	Bronze Full Port
77C	Bronze Full Port Economy
78	Special Valves and Kits
79	Refrigerant Valves
7A	Chlorine Carbon Steel
7K	Bronze Full Port Drain
80	Bronze, UL Listed
81	Bronze, UL Listed Plain Ball
82	Bronze 3-Piece Full Port
89	Cast Carbon Steel w/ Pads
9A	Bronze, Heavy Patt., Unibody
90	Bronze, Unibody UL Listed
91	Bronze, Unibody
92	Cast Carbon Steel Unibody
93	Carbon Steel Unibody
95	Bronze & Stop Drain
96	CF8M Stainless Steel Unibody
399	Alloy-20 NPT

3-PIECE VALVES	
83A	CS 3-Piece 1500 lb Full Port
83B	CS 3-Piece ASME Class 600 Full Port
86A	SS 3-Piece 1500 lb Full Port
86B	SS 3-Piece ASME Class 600 Full Port
86C	Alloy-20 3-Piece, ASME Class 600 Full Port
83R	CS 3-Piece, Full Port (2"& 3" only)
86R	SS 3-Piece, Full Port (2"& 3" only)

FLANGED VALVES	
87A	CF8M SS Flanged
87A	Alloy 20 Flanged
87B	CF8M SS Flanged Unibody
88A	Carbon Steel Flanged
88B	Carbon Steel Flanged Unibody
88L	Low Temp Carbon Steel Flanged

TYPE

2-PIECE & UNIBODY VALVES	
1	NPT Female or Std Connection
2	Solder/Socket Weld
3	Union End x NPT (70-3) Double UNION END (73-3, 76-3)
4	Union End x Solder Socket Weld Double Union End (76-4)
5	Spring Return Handle
6	3-Way NPT
7	Full Port Refrigeration Valves
8	Male X Female NPT
9	3-Way Solder / O-Ring Boss (70-9) SAE Straight Threads (72, 77)

3-PIECE VALVES	
1	NPT Female
2	Solder (82)/Socket Weld (83/86)
3	Schedule 5 Butt Weld
4	Schedule 10 Butt Weld
5	Schedule 40 Butt Weld
6	Schedule 80 Butt Weld

FLANGED VALVES	
1	Class 150 Standard Port
2	Class 150 Full Port
3	(AAR Valves)
4	Class 150, Standard Port, Alloy 20 (87A)
5	Class 150, Full Port, Alloy 20 (87A)
6	Class 300, Full Port, Alloy 20 (87A)
7	Class 300, Standard Port
8	Class 300, Standard Port, Alloy 20 (87A)
9	Class 300 Full Port
F	Class 600 Full Port

VARIATIONS

0	Standard Configuration
3	Ni-Cu Ball & Stem
4	SS Ball & Stem
8	SS Stem
9*	Pinned Retainer
A	Alloy 20
H	Hastelloy® C Ball & Stem
N	Nickel

**Bronze valves only*

aalberts integrated piping systems

APOLLO NUMBERING SYSTEM

NOTE: NOT ALL OPTIONS AND COMBINATIONS AVAILABLE ON ALL SIZES AND SERIES. REVIEW THE SPECIFIC TECHNICAL SHEET TO DETERMINE AVAILABILITY.

Modifying Suffixes

- The "01" suffix represents the standard configuration detailed in the Technical Literature.
- If an option is desired, replace the "01" suffix with the suffix of the option.
- If multiple options are desired, replace the "01" suffix with the desired suffixes in the order shown below.
  Example: 87A-10A-1424MG

SIZE

1	1/4"
2	3/8"
3	1/2"
4	3/4"
5	1"
6	1.25"
7	1.5"
8	2"
9	2.5"
0	3"
A	4"
C	6"
E	8"
G	10"
H	12"

OPTIONS

-01	Standard Configuration
-02	Grounded
-04	2-1/4" Stem Extension
-05	Plain Ball
-07	Tee Handle
-08	90° Reversed Stem
-10	SS Lever and Fastener
-11	Therma-Seal™ Handle
-12	Stamped "157 SWP" & Bagged
-13	Stamped "157 SWP"
-14	Side Vented Ball (Uni-Directional)
-15	Round Handle, Steel
-16	Chain Lever - Valve in Vertical Position
-17	Rough Chrome Plated
-18	Plain Yellow Grip
-19	Pad-Locking
-20	Slot Vented Ball (Bi-Directional)
-21	UHMWPE Trim (Non PTFE)
-22	Viton Union Seals
-23	Tank Flange (2" 3-Pc. Valves Only)
-24	Graphite Packing (Not Always Firesafe)
-26	For Chlorine Service: Side Vented,Cleaned (CS, HC, Monel Only)
-27	SS Latch Lock Lever & Nut
-29	Graphite Packing & Seals (Firesafe)
-30	Cam-Lock Handle And Grounded
-31	7B Series w/Boss Not Drilled/Tapped
-32	SS Tee Handle & Nut (Hi-Rise Handle)
-33	73-300 Series w/Pad Drilled/Tapped
-34	Nylatron Seats (96 Series)
-35	PTFE (Virgin TFE)
-36	SS Hi-Rise Round Handle, SS Nut
-38	Peek Seats & Bearing, Graphite Packing & Seals
-39	SS Hi-Rise Locking Round Handle, SS Nut
-40	Cyl-Loc & Grounded
-41	Automatic Drain (Uni-Directional)
-42	Non-Vented Ball, No Hole in Slot (CS & SS)
-43	Cyl-Loc, Grounded Ball & Stem, 680 Loctite or 3 Tack Welds
-44	Seal Welded (76-100 & 89-100 Series)
-45	Less Lever & Nut (No Hangtag)
-46	Latch-Lock Lever - Lock in Closed Position Only
-47	SS Oval Latch-Lock Handle
-48	SS Oval Handle (No Latch)
-49	Assembled Dry
-50	2-1/4" Locking Stem Extension
-51	One Tack Weld
-52	Two Tack Welds
-53	Three Tack Welds
-54	Four Tack Welds
-56	Multifill Seats (MPTFE) Not Available When 250#SWP Applies
-57	Cleaned for Oxygen Service (N/A on LF Bronze with Solder Extensions)
-58	Chain Lever - Valve in Horizontal Position
-59	SS External Trim (3-Pc. and Flange Valves)
-60	Grounded Ball & Stem
-62	Body Center Section
-63	NPT x Solder / Socket Weld
-64	250# SWP (MPTFE Seats & Packing)
-65	MPTFE Seats & Graphite Packing (-24 & -56)
-66	FNPT x Butt Weld
-67	Cleaned for Industrial Gas (CS Valves) (I7361 Desiccant)
-69	Purge Ports (Drilled/Tapped at Bottom & Approx. 45°)
-70	4" Extended Bonnet
-72	RTFE Packing
-73	TFE Packing, Spiral Wound Body Seals, TFE Fillers
-75	MPTFE Seats, PTFE Packing, RPTFE Gaskets
-76	Live Loaded - with Lever
-77	Live Loaded - Actuated or Gear Operated
-78	Delrin Seats
-79	Nylon Seats - Graphite Packing (72 Series)
-8R	15% Glass Filled TFM 1600 Seats, PEEK Bearing
-80	Dyneon TFE 1600 Seats, PEEK Bearing
-81	Graphite Packing with Braided End Rings (Flange Valves)
-82	Flat Face Flanges
-83	SS Tee Handle & Nut (SS Version of -07) (77 Series)
-84	Reverse SS Lever & Nut (77B Series)
-85	Short SS Tee Handle & Nut (Silicone Bronze Retainer) (77B 1/2")
-86	Reverse Locking SS lever (77B Series) (Locking Version of -84)
-87	Safety Latch (Flange Valves)
-88	Panel Mount (60A Series)
-89	PFA Seats
-9P	Double Packed Extended Bonnet with Port
-90	Double Packed Extended Bonnet
-91	Latch-Lock Tee Handle, SS
-92	Balancing Stop
-94	-04 & Balancing Stop
-95	Devlon Seats, Graphite Packing, PEEK Bearing
-96	PCTFE Seats, Graphite Packing
-97	Ground, Round Handle, Pinned or Tack Welded
-99	For 7B Series: -99A Less Lever, Side Tap | -99B Less Lever, No Tap
-AR	Actuator Ready (MPTFE Seats, Live Loaded, Less Lever)
-BC	Ball Check
-BK	PCTFE Bearing
-CE	CE Approved (1-1/4" and Above Only)
-DP	Dye Penetrate
-EF	Fugitive Emissions Packing (Graphite)
-EP	Garlock EVSP Packing, Graphite Spiral Wound Gasket
-GS	Gas Service; CSA Approved
-HC	3/4" Hose Thread Retainer with Brass Cap & Chain
-KF	Kel-F Bearing
-MG	Gear Operated, Standard Hand Wheel
-MH	Gear Operated, Standard Hand Wheel & Lockout Device
-MJ	Gear Operated, Oversize Hand Wheel
-MK	Gear Operated, Oversize Hand Wheel & Lockout Device
-MP	Material Positive (PMI Testing)
-PH	17-4 PH Stem
-RR	Oiled and Bagged for Rust Prevention on Carbon Steel Valves
-SR	Spring Return Handle (83A/B & 86A/B Series)
-SV	Safety Vent (77-100 / 7K-100 Series) (Auto Drain)
-SW	Limit Switch Mounted
-TC	Tested, Hydrostatic w/Certification
-TD	Tested to API 6D w/Certification
-TH	Tested, Hydrostatic
-TM	MTR
-TR	Tested, Hydrostatic w/Certification and MTR
-TS	Tested, Special, Customer Specified
-TW	Tested, Hydrostatic w/Witness and Certification
-UA	AIS Compliant
-US	Made in USA
-ZG	Cup & Cone Style Packing, Graphite
-ZP	Cup & Cone Style Packing, PTFE
-ZP1	Fugitive Emissions Packing (Viton)
-ZP2	Fugitive Emissions Packing (Buna-N)
-ZP3	Fugitive Emissions Packing (Kalrez)
-SP3	Corrosion Testing to ASTM A262 Practice A (SS Valves Only)

WARRANTY INFORMATION

TERMS & CONDITIONS

5 YEAR WARRANTY
MADE IN USA

Conbraco Industries, Inc. warrants, to its initial purchaser only, that its products which are delivered to this initial purchaser will be of the kind described in the order or price list and will be free of defects in workmanship or material for a period of FIVE years from the date of delivery to you, our initial purchaser. This warranty applies to Apollo brand product with "Made in the USA" markings only.

Should any failure to conform to this warranty appear within **FIVE** years after the date of the initial delivery to our initial purchaser, Conbraco will, upon written notification thereof and substantiation that the goods have been stored, installed, maintained and operated in accordance with Conbraco's recommendations and standard industry practice, correct such defects by suitable repair or replacement at Conbraco's own expense.

APOLLO INTERNATIONAL PRODUCTS: Conbraco Industries, Inc. warrants its International products, to its initial purchaser only, that its international products which are delivered to this initial purchaser will be of the kind described in the order or price list and will be free of defects in workmanship or material for a period of TWO years from the date of delivery to you, our initial purchaser.

THIS WARRANTY IS EXCLUSIVE AND IS IN LIEU OF ANY IMPLIED WARRANTY OF MERCHANTABILITY, FITNESS FOR A PARTICULAR PURPOSE OR OTHER WARRANTY OF QUALITY, WHETHER EXPRESSED OR IMPLIED, EXCEPT THE WARRANTY OF TITLE AND AGAINST PATENT INFRINGEMENT. Correction of non-conformities, in the manner and for the period of time provided above, shall constitute fulfillment of all liabilities of Conbraco to our initial purchaser, with respect to the goods, whether based on contract, negligence, strict tort or otherwise. It is the intention of Conbraco Industries, Inc. that no warranty of any kind, whether expressed or implied shall pass through our initial purchaser to any other person or corporation.

LIMITATION OF LIABILITY: Conbraco Industries, inc. SHALL NOT UNDER ANY CIRCUMSTANCES BE LIABLE FOR SPECIAL OR CONSEQUENTIAL DAMAGES SUCH AS, BUT NOT LIMITED TO, DAMAGES OR TO LOSS OF OTHER PROPERTY OR EQUIPMENT, LOSS OF PROFITS OR REVENUE, COST OF CAPITAL, COST OF PURCHASED OR REPLACEMENT GOODS, OR CLAIMS OF CUSTOMERS OF OUR INITIAL PURCHASER. THE REMEDIES OF OUR INITIAL PURCHASER, AND ALL OTHERS, SET FORTH HEREIN, ARE EXCLUSIVE, AND THE LIABILITY OF CONBRACO WITH RESPECT TO SAME SHALL NOT, EXCEPT AS EXPRESSLY PROVIDED HEREIN, EXCEED THE PRICE OF THE GOODS UPON WHICH SUCH LIABILITY IS BASED.

* It is the end user's responsibility to confirm that items intended for use satisfy local codes and standards.

TERMS AND CONDITIONS OF SALE

- Payment: 2% 10th prox. Net 30 days.
- All prices F.O.B. shipping point with freight allowed on shipments of 750 pounds and/or $5,000 net minimum to all shipping points within the United States, excluding Alaska and Hawaii. No freight allowed on Air Freight or Parcel Post shipments. Claims for shortages must be made within 10 days of receipt of material. Our responsibility ends when a receipt is furnished us by the carrier.
- No invoice rendered for less than $50.00.
- No freight will be allowed on Air Freight, Air Express, Parcel Post or U.P.S. shipments.
- All Conbraco products may be combined to make sufficient weight for full freight allowance.
- Phone order quoted prices are subject to correction. Prices and designs are subject to change without notice.
- Orders for material or special design or specification are made to customer's order and are not subject to cancellation or return.
- All goods returned to us will not be accepted unless a full explanation has been made and our written authorized permission obtained in advance. All goods returned – if accepted – will be credited at invoice price, less 30% for service and rehandling charges, plus shipping expenses.
- We reserve the right to adjust orders to box quantities.

"Apollo"® Valves | INDUSTRIAL PRODUCTS

2-Piece Ball Valves

section A

SECTION A

2-PIECE BALL VALVES

SERIES	DESCRIPTION	PAGE
BRONZE		
70-100 SERIES	Threaded Bronze	A-3
70LF-100 SERIES	Lead Free* Threaded Bronze	A-4
70B-140 SERIES	Threaded Power Piping Bronze Ball Valve	A-5
70-200 SERIES	Solder Bronze	A-6
70LF-200 SERIES	Lead Free* Solder Bronze	A-7
70-800 SERIES	M x F Threaded Bronze	A-8
71-100 SERIES	Threaded Bronze with Mounting Pad	A-9
71-AR SERIES	Actuator Ready Threaded Bronze	A-10
77-100 SERIES	Threaded Full Port Bronze with Mounting Pad	A-29
77-200 SERIES	Solder Bronze, Full Port	A-30
77-900 SERIES	SAE Straight Thread Bronze	A-31
77-AR SERIES	Actuator Ready Threaded Full Port Bronze	A-32
77D-14X SERIES	Threaded Bronze, Full Port with Direct Mount ISO Mounting Pad	A-33
CARBON STEEL		
72-100-A SERIES	Threaded High Pressure Carbon Steel	A-11
72-900 SERIES	SAE Straight Thread Carbon Steel	A-12
73A-100 SERIES	Threaded Forged Carbon Steel	A-13
89-100 SERIES	Threaded Carbon Steel with Mounting Pad	A-34-36
89-AR SERIES	Actuator Ready Threaded Carbon Steel	A-37
STAINLESS STEEL		
76-100 SERIES	Threaded Stainless Steel with Mounting Pad	A-14-16
76-AR SERIES	Actuator Ready	A-17
76F-100-A SERIES	Threaded Stainless Steel Full Port	A-18
76J-AR	Threaded Duplex Stainless Steel with ISO Mounting Pad	A-24
76FJ-100-A SERIES	Threaded Full Port Duplex Stainless Steel	A-19
76FK-100-A SERIES	Threaded Full Port Super Duplex Stainless Steel	A-20
76J-100 SERIES	Threaded Duplex Stainless Steel with Mounting Pad	A-21-23
76K-100 SERIES	Threaded Super Duplex Stainless Steel with Mounting Pad	A-25-27
76K-AR SERIES	Threaded Super Duplex Stainless Steel with ISO Mounting Pad	A-28
OTHER ALLOYS		
399-100 SERIES	Threaded Alloy-20 with Mounting Pad	A-38-39

SECTION A

TWO PIECE BALL VALVES

SERIES	CWP (PSIG)					PORT	SIZE RANGE	1/4"	3/8"	1/2"	3/4"	1"	1-1/4"	1-1/2"	2"	2-1/2"	3"	4"	DESIGN	
CARBON STEEL																				
72-1xx-A					3000	Full Port	1/2" to 2"			•	•	•	•	•	•				Forged	
72-9xx-A					3000	Full Port	1/4" to 2"	•	•	•	•	•	•	•	•				Forged	SAE Straight Thread
73A-1xx-A				2000		Standard	1/4" to 1"	•	•	•	•	•							Forged	
			1500			Standard	1-1/4" to 2"						•	•	•				Forged	
89-1xx				2000		Standard	1/4" to 1"	•	•	•	•	•							Cast	w/ Mounting Pad
			1500			Standard	1-1/4" to 2"						•	•	•				Cast	w/ Mounting Pad
		1000				Standard	2-1/2" to 3"									•	•		Cast	w/ Mounting Pad
89-AR				2000		Standard	1/4" to 1"	•	•	•	•	•							Cast	w/ ISO Mounting Pad (Actuator Ready, "AR")
			1500			Standard	1-1/4" to 2"						•	•	•				Cast	w/ ISO Mounting Pad (Actuator Ready, "AR")
		1000				Standard	2-1/2" to 3"									•	•		Cast	w/ ISO Mounting Pad (Actuator Ready, "AR")
STAINLESS STEEL																				
76-1xx 76J-1xx 76K-1xx				2000		Standard	1/4" to 1"	•	•	•	•	•							Cast	w/ Mounting Pad
			1500			Standard	1-1/4" to 2"						•	•	•				Cast	w/ Mounting Pad
		1000				Standard	2-1/2" to 3"									•	•		Cast	w/ Mounting Pad
76-AR 76J-AR 76K-AR				2000		Standard	1/4" to 1"	•	•	•	•	•							Cast	w/ ISO Mounting Pad (Actuator Ready, "AR")
			1500			Standard	1-1/4" to 2"						•	•	•				Cast	w/ ISO Mounting Pad (Actuator Ready, "AR")
		1000				Standard	2-1/2" to 3"									•	•		Cast	w/ ISO Mounting Pad (Actuator Ready, "AR")
76F-1xx-A 76FJ-1xx-A 76FK-1xx-A		1000				Full Port	1/2" to 3"			•	•	•	•	•	•		•		Cast	
ALLOY 20																				
399-1xx	1500 to 2000					Standard	1/4" to 2"	•	•	•	•	•	•	•	•				Cast	w/ Mounting Pad
BRONZE																				
70-1xx	600					Standard	1/4" to 4"	•	•	•	•	•	•	•	•	•	•	•	Cast	
70LF-1xx	600					Standard	1/4" to 4"	•	•	•	•	•	•	•	•	•	•	•	Cast	Lead Free*
70B-14x	600					Standard	1/4" to 2"	•	•	•	•	•	•	•	•				Cast	Threaded Power Piping Bronze Ball Valve
70-2xx	600					Standard	3/8" to 2"		•	•	•	•	•	•	•	•	•	•	Cast	Solder Ends
70LF-2xx	600					Standard	3/8" to 2"		•	•	•	•	•	•	•	•	•	•	Cast	Solder Ends, Lead Free*
70-800	600					Standard	1/4" to 1-1/2"	•	•	•	•	•	•	•					Cast	Male x Female Threaded
71-1xx	600					Standard	3/4" to 3"				•	•	•	•	•		•		Cast	w/ Mounting Pad
71-AR	600					Standard	3/4" to 3"				•	•	•	•	•	•	•		Cast	w/ ISO Mounting Pad (Actuator Ready, "AR")
77-1xx	600					Full Port	1/4" to 2-1/2"	•	•	•	•	•	•	•	•	•			Cast	w/ Mounting Pad
77-2xx	600					Full Port	3/4" to 2-1/2"				•	•	•	•	•	•			Cast	Solder Ends
77-900	600					Full Port	1/4" to 2"	•	•	•	•	•	•	•	•				Cast	SAE Straight Thread
77-AR	600					Full Port	1/4" to 2"	•	•	•	•	•		•	•				Cast	w/ ISO Mounting Pad (Actuator Ready, "AR")
77D-14X	600					Full Port	1/2" to 2"			•	•	•	•	•	•				Cast	w/ Direct Mount AR ISO Mounting Pad

LEADFREE CERTIFIED

LEADFREE OPTIONS

PRODUCTS THAT ARE CERTIFIED LEAD FREE* OR HAVE A LEAD FREE* OPTION WILL BE IDENTIFIED WITH THESE LOGOS.

*LEAD FREE: THE WETTED SURFACES OF THIS PRODUCT SHALL CONTAIN NO MORE THAN 0.25% LEAD BY WEIGHTED AVERAGE. COMPLIES WITH FEDERAL PUBLIC LAW 111-380. ANSI 3RD PARTY APPROVED AND LISTED.

**ANY IMPORTED PRODUCTS WILL BE CLEARLY IDENTIFIED AS "APOLLO INTERNATIONAL™" OR "CONBRACO™ INTERNATIONAL" .

REV. 20JAN17

70-100 SERIES

BRONZE BALL VALVE

Female NPT Thread, 600 CWP (psig), Cold Non-Shock. 150 psig Saturated Steam. (See referenced P/T charts)
Vacuum Service to 29 inches Hg.
MSS SP-110 Compliant.

FEATURES

- Two-piece body
- Reinforced seats
- Blowout-proof stem design
- Adjustable packing gland

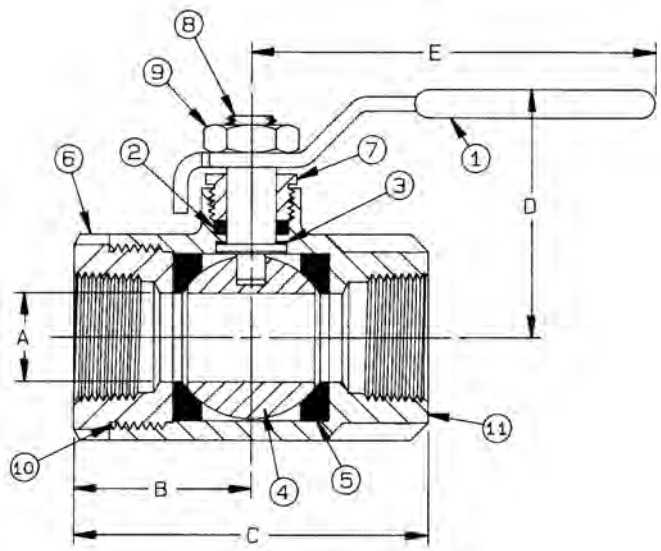

STANDARD MATERIAL LIST

	PART	MATERIAL
1	Lever and grip	Steel, zinc plated w/vinyl
2	Stem packing	MPTFE
3	Stem bearing	RPTFE
4	Ball	B16 Brass, chrome plated
5	Seat (2)	RPTFE (1/4" to 3"); TFM (4")
6	Retainer	B16 Brass (1/4" to 1") B584-C84400 (1-1/4" to 4")
7	Gland nut	B16 Brass
8	Stem	B16 Brass
9	Lever nut	Steel, zinc plated
10	Body seal	PTFE (1-1/4" to 4")
11	Body	B584-C84400

DIMENSIONS

PART NO.	SIZE	A	B	C	D	E	WT.
70-101-01	1/4"	0.37	1.03	2.06	1.75	3.87	0.60
70-102-01	3/8"	0.37	1.03	2.06	1.75	3.87	0.56
70-103-01	1/2"	0.50	1.12	2.17	1.75	3.87	0.63
70-104-01	3/4"	0.68	1.50	3.00	2.12	4.87	1.39
70-105-01	1"	0.87	1.68	3.37	2.25	4.87	1.72
70-106-01	1-1/4"	1.00	2.00	4.00	2.62	5.50	3.26
70-107-01	1-1/2"	1.25	2.18	4.37	3.06	8.00	4.61
70-108-01	2"	1.50	2.34	4.68	3.25	8.00	6.06
70-109-01A	2-1/2"	2.00	3.12	6.25	3.72	8.00	17.25
70-100-01	3"	2.50	3.37	6.75	4.12	8.00	18.60
70-10A-01	4"	3.12	3.69	7.37	5.25	9.94	25.50

VARIATIONS AVAILABLE

- 70-140 Series (316 SS Ball & Stem)
- 70-190 Series (Locked Retainer)

OPTIONS AVAILABLE

(MORE INFORMATION IN SECTION J)

- Minimum quantities apply
- To specify an option, replace the "01" standard suffix with the suffix of the option.
- To specify multiple options, replace the "01" suffix with the desired suffixes in the numerical order shown below. NOTE: Not all suffixes can be combined together.

(SUFFIX)	OPTION	SIZES
-01	Standard Configuration	All
-P -01-	BSPP (Parallel) Thread Connection	1/4" to 3"
-T -01-	BSPT (Tapered) Thread Connection	1/4" to 3"
-02-	Stem Grounded	All
-04-	2-1/4" Stem Extension (Carbon Steel, Zinc Plated)	1/4" to 3"
-05-	Plain Ball	1/4" to 3"
-07-	Steel Tee Handle	1/4" to 2"
-08-	90º Reversed Stem	1/4" to 3"
-10-	SS Lever & Nut	1/4" to 3"
-11-	Therma-Seal™ Insulating Tee Handle	1/4" to 2"
-14-	Side Vented Ball (Uni-Directional)	All
-15-	Wheel Handle, Steel	1/4" to 2"
-16-	Chain Lever - Vertical	3/4" to 2"
-17-	Rough Chrome Plated - Bronze Valves	1/4" to 3"
-21-	UHMWPE Trim (Non-PTFE)	1/4" to 3"
-24-	Graphite Packing	1/4" to 3"
-27-	SS Latch-Lock Lever & Nut	All
-30-	Cam-Lock and Grounded	1/4" to 2"
-32-	SS Tee Handle & Nut	1/4" to 2"
-35-	PTFE Trim	1/4" to 3"
-36-	SS Hi-Rise Round Handle, SS Nut	1/4" to 2"
-39-	SS Hi-Rise Locking Wheel Handle, SS Nut	1/4" to 2"
-40-	Cyl-Loc and Grounded	1/4" to 2"
-41-	Automatic Drain (+50°F to 200°F limit. 125 psig max.)	1/4" to 2"
-45-	Less Lever & Nut	1/4" to 3"
-46-	Latch Lock Lever - Lock in Closed Position Only	1/4" to 3"
-47-	SS Oval Latch-Lock Handle & Nut	1/4" to 2"
-48-	SS Oval Handle (No Latch) & Nut	1/4" to 2"
-49-	No Lubrication. Assembled Dry.	All
-50-	2-1/4" CS Locking Stem Extension	1/4" to 3"
-56-	Multifill Seats & Packing	1/4" to 3"
-57-	Oxygen Cleaned	All
-58-	Chain Lever - Horizontal	3/4" to 2"
-60-	Static Grounded Ball & Stem	1/4" to 3"
-63-	NPT x Solder/Socket Weld	3/8" to 4"
-64-	250# Steam Trim (MPTFE Seats & Packing) Use with 316 SS Ball & Stem Variation	1/4" to 3"
-92-	Balancing Stop	1/4" to 3"
-94-	2-1/4" Stem Extension, Balancing Stop	1/4" to 3"
-HC-	Hose Cap & Chain	1/2" to 1"

Pressure/Temperature Ratings - Page M-10, Graph No. 4

70LF-100 SERIES

LEAD FREE* BRONZE BALL VALVE

Female NPT Thread, 600 CWP (psig). 150 psig SWP. (See referenced P/T charts)
Vacuum Service to 29 inches Hg.
MSS SP-110 Compliant.
CRN: OC10908.5C

FEATURES

- Lead Free* brass and bronze materials
- NSF/ANSI/CAN 61 Section 8, Annex G
- Easily identifiable blue hang tag & white lever grip
- RPTFE seats and stuffing box ring
- Designed, manufactured, and 100% factory tested in the USA
- NSF/ANSI 372 - Drinking Water System Components - Lead Content

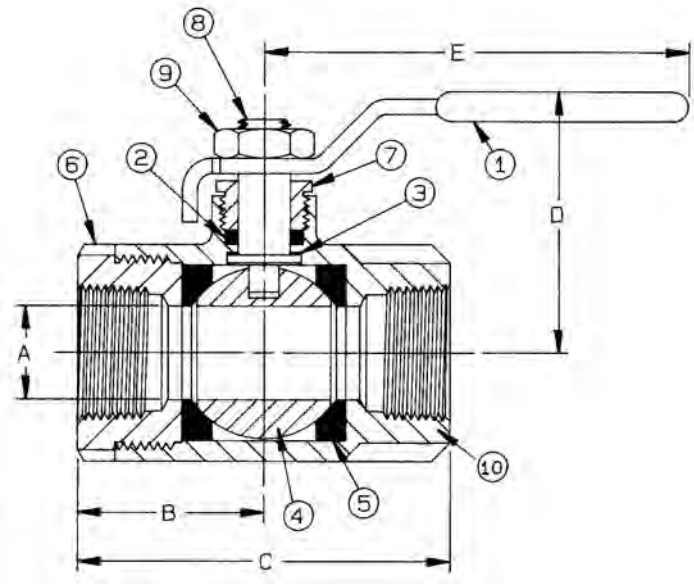

VARIATIONS AVAILABLE

- 70LF-140 Series (316 SS Ball & Stem)
- 70LF-HC Hose Cap & Chain

OPTIONS AVAILABLE

(MORE INFORMATION IN SECTION J)

- Minimum quantities apply
- To specify an option, replace the "01" standard suffix with the suffix of the option.
- To specify multiple options, replace the "01" suffix with the desired suffixes in the numerical order shown below. NOTE: Not all suffixes can be combined together.

(SUFFIX)	OPTION	SIZES
-01	Standard Configuration	All
-04-	2-1/4" Stem Extension (Carbon Steel, Zinc Plated)	1/4" to 3"
-07-	Steel Tee Handle	1/4" to 2"
-10-	SS Lever & Nut	All
-11-	Therma-Seal™ Insulating Tee Handle	1/4" to 2"
-27-	SS Latch-Lock Lever & Nut	1/2" to 4"
-32-	SS Tee Handle & Nut	1/2" to 2"
-47-	SS Oval Latch-Lock Handle & Nut	1/2" to 2"
-92-	Balancing Stop	1/4" to 3"
-94-	2-1/4" Stem Extension, Balancing Stop	1/4" to 3"
-HC-	Hose Cap & Chain with SS Lever & Nut	1/2" to 1"

Pressure/Temperature Ratings - Page M-10, Graph No. 3

STANDARD MATERIAL LIST

	PART	MATERIAL
1	Lever and grip	Steel, zinc plated w/vinyl
2	Stem packing	RPTFE
3	Stem bearing	RPTFE
4	Ball	C27451 Lead Free* Brass, Chrome Plated
5	Seat (2)	RPTFE
6	Retainer	C27451 Lead Free* Brass (1/4"-1") C89836 Lead Free* Bronze (1-1/4"-4")
7	Gland Nut	B16 Brass
8	Stem	C27451 Lead Free* Brass
9	Lever Nut	Steel, Zinc Plated
10	Body	C89836 Lead Free* Bronze

DIMENSIONS

PART NO.	SIZE	A	B	C	D	E	WT.
70LF-101-01	1/4"	0.37	1.03	2.06	1.75	3.87	0.60
70LF-102-01	3/8"	0.37	1.03	2.06	1.75	3.87	0.56
70LF-103-01	1/2"	0.50	1.12	2.25	1.75	3.87	0.63
70LF-104-01	3/4"	0.68	1.50	3.00	2.12	4.87	1.39
70LF-105-01	1"	0.87	1.68	3.37	2.25	4.87	1.72
70LF-106-01	1-1/4"	1.00	2.00	4.00	2.62	5.50	3.26
70LF-107-01	1-1/2"	1.25	2.18	4.37	3.06	8.00	4.61
70LF-108-01	2"	1.50	2.34	4.68	3.25	8.00	6.06
70LF-109-01	2-1/2"	2.00	3.12	6.25	3.72	8.00	13.96
70LF-100-01	3"	2.50	3.37	6.75	4.12	8.00	18.60
70LF-10A-01	4"	3.12	3.68	7.37	5.25	10.00	25.50

**LEAD FREE: The wetted surfaces of this product shall contain no more than 0.25% lead by weighted average. Complies with Federal Public Law 111-380. ANSI 3rd party approved and listed.*

70B-140 SERIES

BRONZE BALL VALVE - ASME B31.1 MATERIALS

Female NPT Thread, 600 CWP (psig), Cold Non-Shock. 250 psig Saturated Steam. (See referenced P/T charts)
Vacuum Service to 29 inches Hg.
MSS SP-110 Compliant.

FEATURES

- Two-piece body
- MPTFE seats & packing
- 85-5-5-5 body & retainer
- Slot Vented Ball
- Stainless steel ball & stem
- Blowout-proof stem design
- Adjustable packing gland

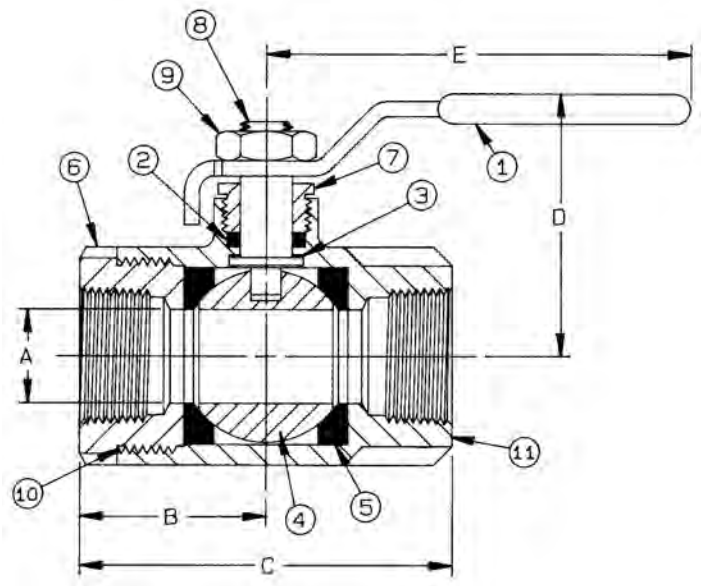

STANDARD MATERIAL LIST

	PART	MATERIAL
1	Lever and grip	Steel, zinc plated w/vinyl
2	Stem packing	MPTFE
3	Stem bearing	RPTFE
4	Ball	A276-316
5	Seat (2)	MPTFE
6	Retainer	B505-C83600 (1/4" to 1") B62-C83600 (1-1/4" to 2")
7	Gland Nut	B16 Brass
8	Stem	A276-316
9	Lever Nut	Steel, zinc plated
10	Body seal	PTFE (1-1/4" to 4")
11	Body	B62-C83600

DIMENSIONS

PART NO.	SIZE	A	B	C	D	E	WT.
70B-141-64	1/4"	0.37	1.03	2.06	1.75	3.87	0.60
70B-142-64	3/8"	0.37	1.03	2.06	1.75	3.87	0.56
70B-143-64	1/2"	0.50	1.12	2.25	1.75	3.87	0.63
70B-144-64	3/4"	0.68	1.50	3.00	2.12	4.87	1.39
70B-145-64	1"	0.87	1.68	3.37	2.25	4.87	1.72
70B-146-64	1-1/4"	1.00	2.00	4.00	2.62	5.50	3.26
70B-147-64	1-1/2"	1.25	2.18	4.37	3.06	8.00	4.61
70B-148-64	2"	1.50	2.34	4.68	3.25	8.00	6.06

OPTIONS AVAILABLE

(MORE INFORMATION IN SECTION J)

- Minimum quantities apply
- To specify an option, replace the "64" standard suffix with the suffix of the option.
- To specify multiple options, replace the "64" suffix with the desired suffixes in the numerical order shown below. NOTE: Not all suffixes can be combined together.

(SUFFIX)	OPTION	SIZES
-64	Standard Configuration	All
-P -64-	BSPP (Parallel) Thread Connection	All
-T -64-	BSPT (Tapered) Thread Connection	All
-07-	Steel Tee Handle	All
-08-	90º Reversed Stem	All
-10-	SS Lever & Nut	All
-14-	Side Vented Ball (Uni-Directional)	All
-15-	Wheel Handle, Steel	All
-16-	Chain Lever - Vertical	3/4" to 2"
-27-	SS Latch-Lock Lever & Nut	All
-30-	Cam-Lock and Grounded	All
-32-	SS Tee Handle & Nut	All
-36-	SS Hi-Rise Round Handle, SS Nut	All
-39-	SS Hi-Rise Locking Wheel Handle, SS Nut	All
-40-	Cyl-Loc and Grounded	All
-45-	Less Lever & Nut	All
-46-	Latch Lock Lever - Lock in Closed Position Only	All
-47-	SS Oval Latch-Lock Handle & Nut	1/4" to 1"
-48-	SS Oval Handle (No Latch) & Nut	All
-49-	No Lubrication. Assembled Dry.	All
-50-	2-1/4" CS Locking Stem Extension	All
-58-	Chain Lever - Horizontal	3/4" to 2"
-60-	Static Grounded Ball & Stem	All
-65-	Graphite Packing	All

Pressure/Temperature Ratings - Page M-10, Graph No. 4

REV. 30JUN16

70-200 SERIES

SOLDER END BRONZE BALL VALVE

Solder End, 600 CWP (psig), Cold Non-Shock. 150 psig Saturated Steam. (See referenced P/T charts)
Vacuum Service to 29 inches Hg.
MSS SP-110 Compliant.

FEATURES

- Two-piece body
- Blowout-proof stem design
- Reinforced seats
- Adjustable packing gland

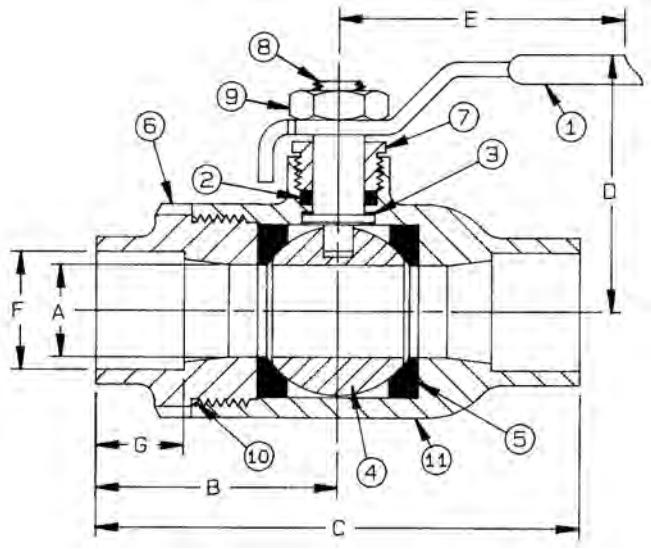

STANDARD MATERIAL LIST

	PART	MATERIAL
1	Lever and grip	Steel, zinc plated w/vinyl
2	Stem packing	MPTFE
3	Stem bearing	RPTFE
4	Ball	B16 Brass, chrome plated
5	Seat (2)	RPTFE (3/8" to 3"); TFM (4")
6	Retainer	B16 Brass (3/8" to 1") B584-C84400 (1-1/4" to 4")
7	Gland nut	B16 Brass
8	Stem	B16 Brass
9	Lever nut	Steel, zinc plated
10	Body seal (1-1/4" to 4")	PTFE
11	Body	B584-C84400

The 70-200 is designed to be soft soldered into lines without disassembly. This allows a tested valve to be installed without disturbing the seats and seals in any way. Soldering temperature not to exceed 500ºF.

VARIATIONS AVAILABLE

- 70-240 Series (316 SS Ball & Stem)
- 70LF-HC Hose Cap & Chain

OPTIONS AVAILABLE

(MORE INFORMATION IN SECTION J)

- Minimum quantities apply
- To specify an option, replace the "01" standard suffix with the suffix of the option.
- To specify multiple options, replace the "01" suffix with the desired suffixes in the numerical order shown below. NOTE: Not all suffixes can be combined together.

(SUFFIX)	OPTION	SIZES
-01	Standard Configuration	All
-02-	Stem Grounded	All
-04-	2-1/4" Stem Extension (Carbon Steel, Zinc Plated)	3/8" to 3"
-05-	Plain Ball	3/8" to 3"
-07-	Steel Tee Handle	3/8" to 2"
-08-	90º Reversed Stem	3/8" to 3"
-10-	SS Lever & Nut	3/8" to 3"
-11-	Therma-Seal™ Insulating Tee Handle	3/8" to 2"
-14-	Side Vented Ball (Uni-Directional)	All
-15-	Wheel Handle, Steel	3/8" to 2"
-16-	Chain Lever - Vertical	3/4" to 2"
-24-	Graphite Packing	3/8" to 3"
-27-	SS Latch-Lock Lever & Nut	3/8" to 3"
-32-	SS Tee Handle & Nut	3/8" to 2"
-35-	PTFE Trim	3/8" to 3"
-39-	SS Hi-Rise Locking Wheel Handle, SS Nut	3/8" to 2"
-45-	Less Lever & Nut	3/8" to 3"
-46-	Latch Lock Lever - Lock in Closed Position Only	3/8" to 3"
-47-	SS Oval Latch-Lock Handle & Nut	3/8" to 2"
-48-	SS Oval Handle (No Latch) & Nut	3/8" to 2"
-49-	No Lubrication. Assembled Dry.	All
-50-	2-1/4" CS Locking Stem Extension	3/8" to 3"
-56-	Multifill Seats & Packing	3/8" to 3"
-57-	Oxygen Cleaned	All
-58-	Chain Lever - Horizontal	3/4" to 2"
-60-	Static Grounded Ball & Stem	3/8" to 3"
-63-	NPT x Solder/Socket Weld	All
-92-	Balancing Stop	3/8" to 3"
-94	2-1/4" Stem Extension, Balancing Stop	3/8" to 3"
-HC-	Hose Cap & Chain with SS Lever & Nut	1/2" to 1"

Pressure/Temperature Ratings - Page M-10, Graph No. 3

DIMENSIONS

PART NO.	SIZE	A	B	C	D	E	F	G	WT.
70-202-01	3/8"	0.37	1.28	2.56	1.75	3.87	.505	0.37	0.63
70-203-01	1/2"	0.50	1.43	2.87	1.75	3.87	.630	0.50	0.71
70-204-01	3/4"	0.68	1.93	3.87	2.12	4.87	.880	0.75	1.44
70-205-01	1"	0.87	2.25	4.50	2.25	4.87	1.130	0.90	1.91
70-206-01	1-1/4"	1.00	2.31	4.62	2.62	5.50	1.380	0.96	2.95
70-207-01	1-1/2"	1.25	2.62	5.25	3.06	8.00	1.630	1.09	3.99
70-208-01	2"	1.50	3.18	6.37	3.25	8.00	2.130	1.34	5.71
70-209-01A	2-1/2"	2.00	3.74	7.51	3.72	8.00	2.630	1.48	15.53
70-200-01	3"	2.50	4.12	8.25	4.12	8.00	3.130	1.67	16.74
70-20A-01	4"	3.12	5.65	10.26	5.22	9.94	4.130	2.16	27.93

70LF-200 SERIES

LEAD FREE* SOLDER END BRONZE BALL VALVE

Solder End, 600 CWP (psig). 150 psig SWP. (See referenced P/T charts)
Vacuum Service to 29 inches Hg.
MSS SP-110 Compliant.
CRN: OC10908.5C

FEATURES

- Lead Free* brass and bronze materials
- RPTFE seats and stuffing box ring
- NSF/ANSI/CAN 61 Section 8, Annex G
- Designed, manufactured, and 100% factory tested in the USA
- Easily identifiable blue hang tag & white lever grip
- NSF/ANSI 372 - Drinking Water System Components - Lead Content

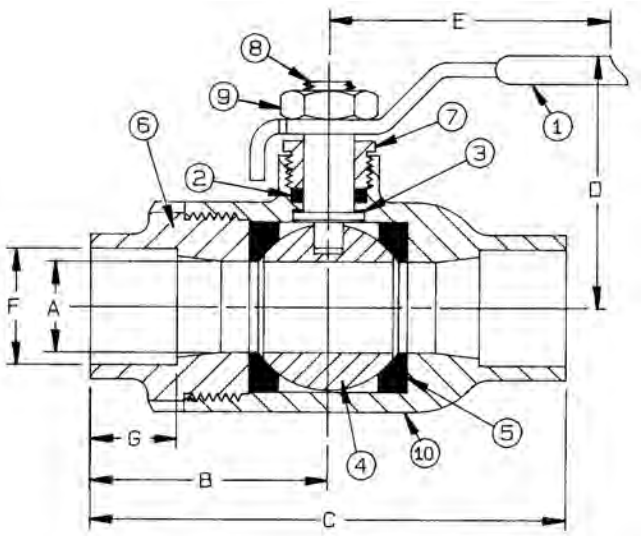

OPTIONS AVAILABLE

(MORE INFORMATION IN SECTION J)

- Minimum quantities apply
- To specify an option, replace the "01" standard suffix with the suffix of the option.
- To specify multiple options, replace the "01" suffix with the desired suffixes in the numerical order shown below. NOTE: Not all suffixes can be combined together.

(SUFFIX)	OPTION	SIZES
-01	Standard Configuration	All
-04-	2-1/4" Stem Extension (Carbon Steel, Zinc Plated)	3/8" to 3"
-07-	Steel Tee Handle	3/8" to 2"
-10-	SS Lever & Nut	3/8" to 3"
-11-	Therma-Seal™ Insulating Tee Handle	3/8" to 2"
-27-	SS Latch-Lock Lever & Nut	All
-32-	SS Tee Handle & Nut	3/8" to 2"
-47-	SS Oval Latch-Lock Handle & Nut	3/8" to 2"
-48-	SS Oval Handle (No Latch) & Nut	3/8" to 2"
-92-	Balancing Stop	3/8" to 3"
-94-	2-1/4" Stem Extension, Balancing Stop	3/8" to 3"
-HC-	Hose Cap & Chain with SS Lever & Nut	1/2" to 1"

Pressure/Temperature Ratings - Page M-10, Graph No. 4

STANDARD MATERIAL LIST

	PART	MATERIAL
1	Lever and grip	Steel, zinc plated w/vinyl
2	Stem packing	RPTFE
3	Stem bearing	RPTFE
4	Ball	C27451 Lead Free* Brass, Chrome Plated
5	Seat (2)	RPTFE (3/8" to 3"); TFM (4")
6	Retainer	C27451 Lead Free* Brass (3/8"-1") C89836 Lead Free* Bronze (1-1/4"-4")
7	Gland Nut	B16 Brass
8	Stem	C27451 Lead Free* Brass
9	Lever Nut	Steel, Zinc Plated
10	Body	C89836 Lead Free* Bronze

DIMENSIONS

PART NO.	SIZE	A	B	C	D	E	F	G	WT.
70LF-202-01	3/8"	0.37	1.28	2.56	1.75	3.87	0.51	0.37	0.63
70LF-203-01	1/2"	0.50	1.43	2.87	1.75	3.87	0.63	0.50	0.71
70LF-204-01	3/4"	0.68	1.93	3.87	2.12	4.87	0.88	0.75	1.44
70LF-205-01	1"	0.87	2.25	4.50	2.25	4.87	1.13	0.90	1.91
70LF-206-01	1-1/4"	1.00	2.31	4.62	2.62	5.50	1.38	0.96	2.95
70LF-207-01	1-1/2"	1.25	2.62	5.25	3.06	8.00	1.63	1.09	3.99
70LF-208-01	2"	1.50	3.18	6.37	3.25	8.00	2.13	1.34	5.71
70LF-209-01	2-1/2"	2.00	3.74	7.51	3.72	8.00	2.63	1.48	15.53
70LF-200-01	3"	2.50	4.12	8.25	4.12	8.00	3.13	1.67	16.74
70LF-20A-01	4"	3.13	5.65	10.26	5.22	9.94	4.13	2.16	27.93

**LEAD FREE: The wetted surfaces of this product shall contain no more than 0.25% lead by weighted average. Complies with Federal Public Law 111-380. ANSI 3rd party approved and listed.*

70-800 SERIES

MALE x FEMALE BRONZE BALL VALVE

5 YEAR WARRANTY MADE IN USA

Male x Female NPT Thread, 600 CWP (psig), Cold Non-Shock. 150 psig Saturated Steam. (See referenced P/T chart)
Vacuum Service to 29 inches Hg.
MSS SP-110 Compliant.

FEATURES

- Two-piece body
- Reinforced seats
- Male x female threaded end connections
- Blowout-proof stem design
- Adjustable packing gland

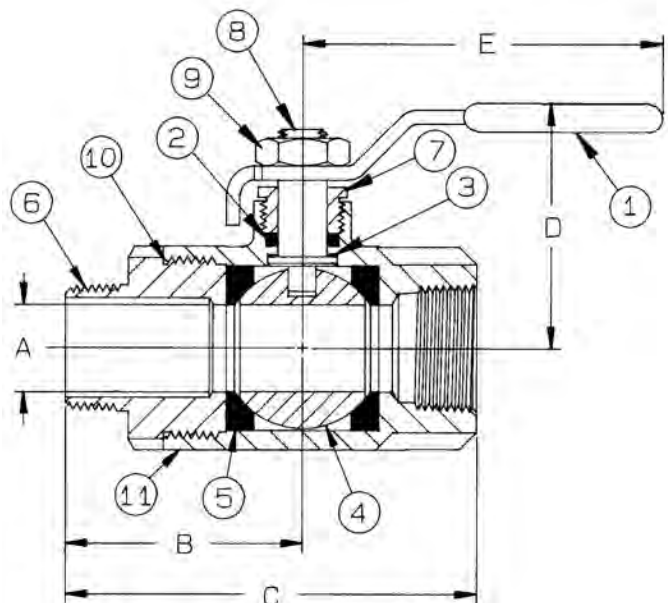

STANDARD MATERIAL LIST

	PART	MATERIAL
1	Lever and grip	Steel, zinc plated w/vinyl
2	Stem packing	MPTFE
3	Stem bearing	RPTFE
4	Ball	B16 Brass, chrome plated
5	Seat (2)	RPTFE
6	Retainer	B16 Brass
7	Gland nut	B16 Brass
8	Stem	B16 Brass
9	Lever nut	Steel, zinc plated
10	Body seal (1-1/4" to 1-1/2")	PTFE
11	Body	B584-C84400

DIMENSIONS

PART NO.	SIZE	A	B	C	D	E	WT.
70-801-01	1/4"	0.37	1.40	2.43	1.75	3.87	0.63
70-802-01	3/8"	0.37	1.46	2.50	1.75	3.87	0.60
70-803-01	1/2"	0.50	1.68	2.81	1.81	3.87	0.72
70-804-01	3/4"	0.68	2.00	3.50	2.12	4.87	1.42
70-805-01	1"	0.87	2.31	4.00	2.25	4.87	1.93
70-806-01	1-1/4"	1.00	2.31	4.31	2.62	5.50	3.19
70-807-01	1-1/2"	1.25	3.00	5.18	3.06	8.00	4.60

VARIATIONS AVAILABLE

- 70-840 Series (316 SS Ball & Stem)

OPTIONS AVAILABLE

(MORE INFORMATION IN SECTION J)

- Minimum quantities apply
- To specify an option, replace the "01" standard suffix with the suffix of the option.
- To specify multiple options, replace the "01" suffix with the desired suffixes in the numerical order shown below. NOTE: Not all suffixes can be combined together.

(SUFFIX)	OPTION	SIZES
-01	Standard Configuration	All
-02-	Stem Grounded	All
-04-	2-1/4" Stem Extension (Carbon Steel, Zinc Plated)	All
-05-	Plain Ball	All
-07-	Steel Tee Handle	All
-08-	90º Reversed Stem	All
-10-	SS Lever & Nut	All
-11-	Therma-Seal™ Insulating Handle	All
-14-	Side Vented Ball (Uni-Directional)	All
-15-	Wheel Handle, Steel	All
-16-	Chain Lever - Vertical	3/4" to 1-1/2"
-21-	UHMWPE Trim (Non-PTFE)	All
-24-	Graphite Packing	All
-27-	SS Latch-Lock Lever & Nut	All
-30-	Cam-Lock and Grounded	All
-32-	SS Tee Handle & Nut	All
-35-	PTFE Trim	All
-39-	SS Hi-Rise Locking Wheel Handle, SS Nut	All
-40-	Cyl-Loc and Grounded	All
-41-	Automatic Drain (+50°F to 200°F limit. 125 psig max.)	All
-45-	Less Lever & Nut	All
-46-	Latch Lock Lever - Lock in Closed Position Only	All
-47-	SS Oval Latch-Lock Handle & Nut	All
-48-	SS Oval Handle (No Latch) & Nut	All
-49-	No Lubrication. Assembled Dry.	All
-50-	2-1/4" CS Locking Stem Extension	All
-56-	Multifill Seats & Packing	All
-57-	Oxygen Cleaned	All
-58-	Chain Lever - Horizontal	3/4" to 1-1/2"
-60-	Static Grounded Ball & Stem	All
-64-	250# Steam Trim (MPTFE Seats & Packing) Use with 316 SS Ball & Stem Variation	All
-92-	Balancing Stop	All
-94	2-1/4" Stem Extension, Balancing Stop	All

Pressure/Temperature Ratings - Page M-10, Graph No. 4

aalberts integrated piping systems

71-100 SERIES

BRONZE BALL VALVE W/ MOUNTING PAD

Female NPT Thread, 600 CWP (psig), Cold Non-Shock. 150 psig Saturated Steam. (See referenced P/T chart)
Vacuum Service to 29 inches Hg.
MSS SP-110 Compliant.

FEATURES

- Two-piece body
- Reinforced seats
- Mounting pad for easy actuator mounting
- Blowout-proof stem design
- Adjustable packing gland

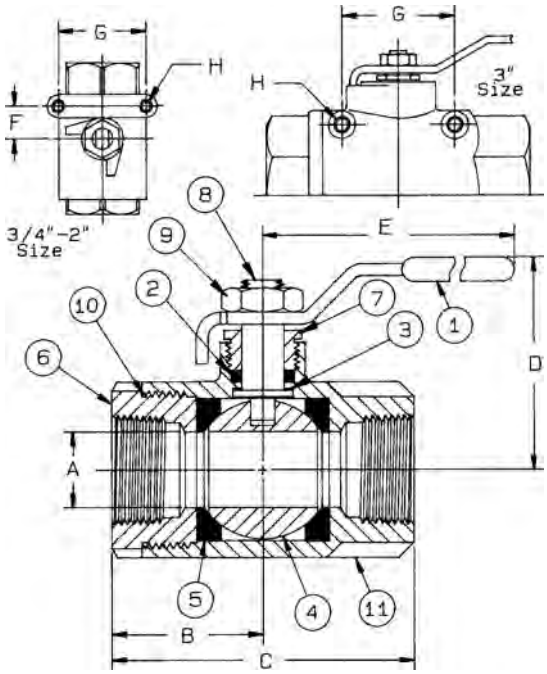

STANDARD MATERIAL LIST

	PART	MATERIAL
1	Lever and grip	Steel, zinc plated w/vinyl
2	Stem packing	MPTFE
3	Stem bearing	RPTFE
4	Ball	B16 Brass, chrome plated
5	Seat (2)	RPTFE
6	Retainer	B16 Brass (3/4" to 1") B584-C84400 (1-1/4" to 3")
7	Gland nut	B16 Brass
8	Stem	B16 Brass
9	Lever nut	Steel, zinc plated
10	Body seal (1-1/4" to 3")	PTFE
11	Body	B584-C84400

Pressure/Temperature Ratings - Page M-10, Graph No. 4

DIMENSIONS

PART NO.	SIZE	A	B	C	D	E	F	G	H	WT.
71-104-01	3/4"	0.68	1.50	3.00	2.12	4.87	0.87	1.37	10-24 NC	1.63
71-105-01	1"	0.87	1.68	3.37	2.25	4.87	0.87	1.37	10-24 NC	1.86
71-106-01	1-1/4"	1.00	2.00	4.00	2.62	5.50	0.93	1.50	1/4-20 NC	3.39
71-107-01	1-1/2"	1.25	2.18	4.37	2.87	8.00	0.93	1.50	1/4-20 NC	4.68
71-108-01	2"	1.50	2.34	4.68	3.06	8.00	0.93	1.50	1/4-20 NC	5.72
71-100-01	3"	2.50	3.37	6.75	4.12	8.00	N/A	2.75	1/4-20 NC	18.60

VARIATIONS AVAILABLE

- 71-140 Series (316 SS Ball & Stem)
- 71-190 Series (Locked Retainer)

OPTIONS AVAILABLE

(MORE INFORMATION IN SECTION J)

- Minimum quantities apply
- To specify an option, replace the "01" standard suffix with the suffix of the option.
- To specify multiple options, replace the "01" suffix with the desired suffixes in the numerical order shown below. NOTE: Not all suffixes can be combined together.

(SUFFIX)	OPTION	SIZES
-01	Standard Configuration	All
-P -01-	BSPP (Parallel) Thread Connection	All
-T -01-	BSPT (Tapered) Thread Connection	All
-02-	Stem Grounded	All
-04-	2-1/4" Stem Extension (Carbon Steel, Zinc Plated)	All
-05-	Plain Ball	All
-07-	Steel Tee Handle	3/4" to 2"
-08-	90º Reversed Stem	All
-10-	SS Lever & Nut	All
-11-	Therma-Seal™ Insulating Tee Handle	3/4" to 2"
-14-	Side Vented Ball (Uni-Directional)	All
-15-	Wheel Handle, Steel	3/4" to 2"
-16-	Chain Lever - Vertical	3/4" to 2"
-21-	UHMWPE Trim (Non-PTFE)	All
-24-	Graphite Packing	All
-27-	SS Latch-Lock Lever & Nut	All
-30-	Cam-Lock and Grounded	3/4" to 2"
-32-	SS Tee Handle & Nut	3/4" to 2"
-35-	PTFE Trim	All
-39-	SS Hi-Rise Locking Wheel Handle, SS Nut	3/4" to 2"
-40-	Cyl-Loc and Grounded	3/4" to 2"
-41-	Automatic Drain (+50°F to 200°F limit. 125 psig max.)	3/4" to 2"
-45-	Less Lever & Nut	All
-46-	Latch Lock Lever - Lock in Closed Position Only	All
-47-	SS Oval Latch-Lock Handle & Nut	3/4" to 1"
-48-	SS Oval Handle (No Latch) & Nut	3/4" to 2"
-49-	No Lubrication. Assembled Dry.	All
-50-	2-1/4" CS Locking Stem Extension	All
-56-	Multifill Seats & Packing	All
-57-	Oxygen Cleaned	All
-58-	Chain Lever - Horizontal	3/4" to 2"
-60-	Static Grounded Ball & Stem	All
-64-	250# Steam Trim (MPTFE Seats & Packing) Use with 316 SS Ball & Stem Variation	All
-92-	Balancing Stop	All
-94	2-1/4" Stem Extension, Balancing Stop	All

71-AR SERIES

BRONZE STANDARD PORT BALL VALVE
W/ ACTUATOR READY ISO MOUNTING PAD

Female NPT Thread, 600 CWP (psig), Cold Non-Shock. (See referenced P/T chart)
250 psig Saturated Steam.
Vacuum Service to 29 inches Hg.
MSS SP-110 Compliant.

FEATURES

- Multi-piece packing set
- ISO 5211 mounting pad
- Stainless ball & stem
- Blowout-proof stem design
- Adjustable packing gland
- Live loaded packing

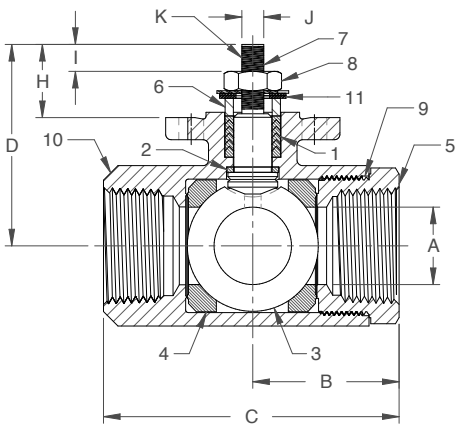

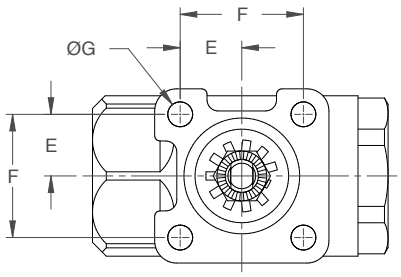

OPTIONS AVAILABLE

(MORE INFORMATION IN SECTION J)

- Minimum quantities apply
- To specify an option, replace the "01" standard suffix with the suffix of the option.
- To specify multiple options, replace the "01" suffix with the desired suffixes in the numerical order shown below. NOTE: Not all suffixes can be combined together.

(SUFFIX)	OPTION	SIZES
-64	Standard Configuration (Bare Stem)	All
-14-	Vented Ball	All
-24-	Graphite Packing	3/4" to 2"
-27-	Latch Lock Handle	All
-35-	PTFE Seats	All
-57-	Oxygen Cleaned	All

STANDARD MATERIAL LIST

	PART	MATERIAL
1	Stem packing	MPTFE
2	Stem bearing	PEEK/PTFE
3	Ball	316 SS
4	Seat (2)	MPTFE
5	Retainer	B16 Brass (3/4" to 1") B584-C84400 (1-1/4" to 3")
6	Gland	B16 Brass
7	Stem	316 SS
8	Jam nut	SS
9	Body seal	PTFE (1-1/4" to 3")
10	Body	B584-C84400
11	Bellville Washers(s)	Stainless Steel

Pressure/Temperature Ratings - Page M-10, Graph No. 4

DIMENSIONS

PART NO.	SIZE	A	B	C	D	E	F	G	H	I	J (FLATS)	K (THREADS) UNF	WT.
71-AR4-64	3/4"	0.68	1.50	3.00	2.16	0.70	1.39	0.28	0.84	0.37	.247/.249	3/8-24	1.38
71-AR5-64	1"	0.87	1.68	3.37	2.28	0.70	1.39	0.28	0.82	0.37	.247/.249	3/8-24	1.76
71-AR6-64	1-1/4"	1.00	1.98	3.97	2.92	0.98	1.95	0.34	1.16	0.37	.370/.372	5/8-18	3.51
71-AR7-64	1-1/2"	1.25	2.18	4.34	3.16	0.98	1.95	0.34	1.16	0.37	.370/.372	5/8-18	4.40
71-AR8-64	2"	1.50	2.34	4.68	3.32	0.98	1.95	0.34	1.16	0.37	.370/.372	5/8-18	5.89
71-AR9-64	2-1/2"	2.00	3.12	6.25	3.85	0.98	1.95	0.34	1.16	0.37	.370/.372	5/8-18	14.12
71-AR0-64	3"	2.50	3.37	6.75	4.18	0.98	1.95	0.34	1.16	0.37	.370/.372	5/8-18	18.55

72-1xx-A SERIES

CARBON STEEL HIGH PRESSURE BALL VALVE

Female NPT Thread, 3000 CWP (psig), Cold Non-Shock Body rating. (See referenced P/T chart)
150 psig Saturated Steam.
Vacuum Service to 29 inches Hg.
MSS SP-110 Compliant.

FEATURES

- Forged body design
- Reinforced seats
- Fire safe "by design" (requires -24 suffix)
- Zinc phosphate corrosion protection
- Adjustable packing gland
- Full port
- Blowout-proof stem design
- Heavy duty lever

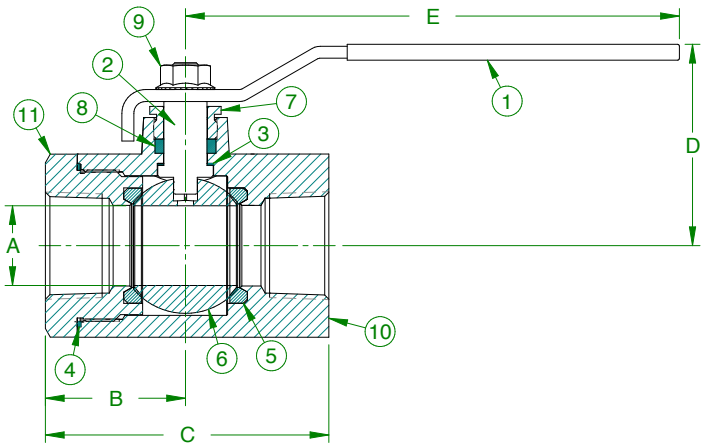

STANDARD MATERIAL LIST

	PART	MATERIAL
1	Lever and grip	Steel, zinc plated w/vinyl
2	Stem	A108-Carbon Steel
3	Stem bearing	RPTFE
4	Retainer seal	RPTFE
5	Seat (2)	RPTFE
6	Ball	ASTM A108, Carbon Steel, Chrome Plated or ASTM A276, Type 316 Stainless Steel
7	Gland nut	A108-Carbon Steel
8	Stem packing	MPTFE
9	Lever nut	Steel, zinc plated
10	Body	A105-Carbon Steel
11	Retainer	A108-Carbon Steel

DIMENSIONS

PART NO.	SIZE	A	B	C	D	E	WT.
72-103-01A	1/2"	0.62	1.40	2.78	2.09	4.76	1.65
72-104-01A	3/4"	0.81	1.83	3.66	2.27	4.76	2.87
72-105-01A	1"	1.00	1.99	3.98	2.94	7.76	4.68
72-106-01A	1-1/4"	1.25	2.20	4.45	3.17	7.76	7.52
72-107-01A	1-1/2"	1.50	2.59	5.09	3.36	7.76	10.62
72-108-01A	2"	2.00	2.91	5.76	4.21	9.91	17.41

VARIATIONS AVAILABLE

- 72-140 Series (316 SS Ball & Stem. NACE MR0175 (2000) & MR0103 (2003) compliant)

OPTIONS AVAILABLE

(MORE INFORMATION IN SECTION J)

- Minimum quantities apply
- To specify an option, replace the "01" standard suffix with the suffix of the option.
- To specify multiple options, replace the "01" suffix with the desired suffixes in the numerical order shown below. NOTE: Not all suffixes can be combined together.

(SUFFIX)	OPTION	SIZES
-01	Standard Configuration	All
-02-	Stem Grounded	All
-04-	2-1/4" Stem Extension (Carbon Steel, Zinc Plated)	1" to 1-1/2"
-07-	Steel Tee Handle	1/2" to 1-1/2"
-08-	90º Reversed Stem	All
-10-	SS Lever & Nut	1-1/2" to 2"
-14-	Side Vented Ball (Uni-Directional)	All
-21-	UHMWPE Trim (Non-PTFE)	All
-24-	Graphite Packing (Fire Safe "By Design")	All
-27-	Latch Lock Handle	All
-45-	Less Lever & Nut	All
-49-	No Lubrication. Assembled Dry	All
-52-	Two Tack Welds	All
-53-	Three Tack Welds	All
-56-	Multifill Seats & Packing	All
-60-	Static Grounded Ball & Stem	All
-64-	250# Steam Trim (MPTFE Seats & Packing) Use with 316 SS Ball & Stem Variation	All
-65-	Multi Fill Seats & Graphite Packing	All
-67-	Cleaned for Industrial Gas	All
-78-	Delrin Seats, Graphite Packing	All
-79-	Nylon Seats, Graphite Packing	All
-UA-	AIS (American Iron & Steel) Compliant	All

Pressure/Temperature Ratings - Page M-15, Graph No. 15

VALVE RATING:
The lowest rating determines the valve's practical pressure limitation. Review the pressure-temperature rating for the valve's seat and the valve's body.

REV. 18JUL19

72-9xx-A SERIES

CARBON STEEL SAE STRAIGHT THREAD BALL VALVE

5 YEAR WARRANTY MADE IN USA

SAE Straight Thread, 3000 CWP (psig), Cold Non-Shock Body Rating (See P/T Chart referenced below for seat rating).
150 psig Saturated Steam.
Vacuum Service to 29 inches Hg.
MSS SP-110 Compliant.

FEATURES

- Forged body design
- Reinforced seats
- Fire safe "by design" (requires -24 suffix)
- Zinc Phosphate corrosion protection
- Adjustable packing gland
- Full port
- Blowout-proof stem design
- Heavy duty lever
- SAE J512/J514 straight thread o-ring boss

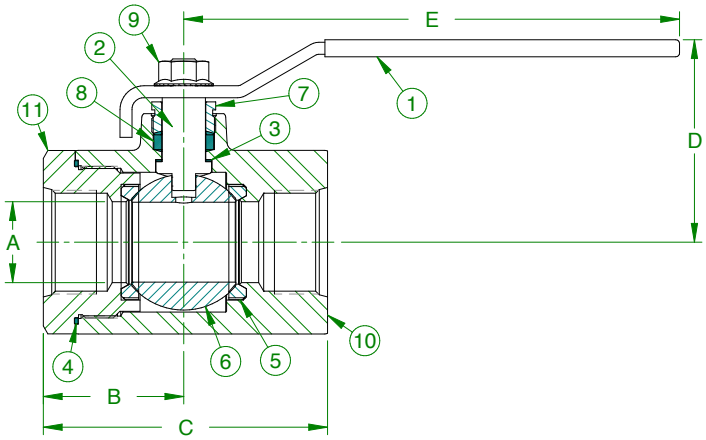

STANDARD MATERIAL LIST

	PART	MATERIAL
1	Lever and grip	Steel, zinc plated w/vinyl
2	Stem	A108-Carbon Steel
3	Stem bearing	RPTFE
4	Retainer seal	RPTFE
5	Seat (2)	RPTFE
6	Ball	ASTM A108, Carbon Steel, Chrome Plated or ASTM A276, Type 316 Stainless Steel
7	Gland nut	A108-Carbon Steel
8	Stem packing	MPTFE
9	Lever nut	Steel, zinc plated
10	Body	A105-Carbon Steel
11	Retainer	A108-Carbon Steel

VARIATIONS AVAILABLE

- 72-940 Series (316 SS Ball & Stem. NACE MR0175 (2000) & MR0103 (2003) compliant)

OPTIONS AVAILABLE

(MORE INFORMATION IN SECTION J)

- Minimum quantities apply
- To specify an option, replace the "01" standard suffix with the suffix of the option.
- To specify multiple options, replace the "01" suffix with the desired suffixes in the numerical order shown below. NOTE: Not all suffixes can be combined together.

(SUFFIX)	OPTION	SIZES
-01	Standard Configuration	All
-02-	Stem Grounded	All
-04-	2-1/4" Stem Extension (Carbon Steel, Zinc Plated)	1" to 1-1/2"
-07-	Steel Tee Handle	1/4" to 1-1/2"
-08-	90º Reversed Stem	All
-10-	SS Lever & Nut	1/4" to 1-1/2"
-14-	Side Vented Ball (Uni-Directional)	All
-21-	UHMWPE Trim (Non-PTFE)	All
-24-	Graphite Packing (Fire Safe "By Design")	All
-27-	Latch Lock Handle	1/2" to 2"
-45-	Less Lever & Nut	All
-49-	No Lubrication. Assembled Dry	1/2" to 2"
-52-	Two Tack Welds	1/2" to 2"
-53-	Three Tack Welds	1/2" to 2"
-56-	Multifill Seats & Packing	All
-60-	Static Grounded Ball & Stem	All
-64-	250# Steam Trim (MPTFE Seats & Packing) Use with 316 SS Ball & Stem Variation	All
-65-	Multi Fill Seats & Graphite Packing	1/2" to 2"
-67-	Cleaned for Industrial Gas	1/2" to 2"
-78-	Delrin Seats, Graphite Packing	All
-79-	Nylon Seats, Graphite Packing	All
-UA-	AIS (American Iron & Steel) Compliant	All

Pressure/Temperature Ratings - Page M-15, Graph No. 15

VALVE RATING:
The lowest rating determines the valve's practical pressure limitation. Review the pressure-temperature rating for the valve's seat and the valve's body.

DIMENSIONS

PART NO.	SIZE	THREAD	A	B	C	D	E	WT.
72-901-01A	1/4"	7/16"-20	0.39	1.40	2.78	2.09	4.76	1.76
72-902-01A	3/8"	9/16"-18	0.51	1.40	2.78	2.09	4.76	1.73
72-903-01A	1/2"	3/4"-16	0.62	1.40	2.78	2.09	4.76	1.66
72-904-01A	3/4"	1-1/16"-12	0.81	1.83	3.66	2.27	4.76	2.81
72-905-01A	1"	1-5/16"-12	1.00	1.99	3.98	2.94	7.76	4.61
72-906-01A	1-1/4"	1-5/8"-12	1.25	2.20	4.45	3.17	7.76	7.47
72-907-01A	1-1/2"	1-7/8"-12	1.50	2.59	5.09	3.36	7.76	10.57
72-908-01A	2"	2-1/2"-12	2.00	2.91	5.76	4.21	9.91	16.69

REV. 18JUL19

aalberts integrated piping systems

73A-100 SERIES

CARBON STEEL BALL VALVE

Female NPT Thread, 1/4" to 1" 2000 CWP (psig), 1-1/4" to 2" 1500 CWP(psig), Cold Non-Shock. 150 psig Saturated Steam.
(See referenced P/T chart)
Vacuum Service to 29 inches Hg.
MSS SP-110 Compliant.
AAR Approved #E999032

FEATURES

- Forged construction
- Raised handle stops
- Blowout-proof stem design
- Adjustable packing gland
- Zinc phosphate corrosion protection
- Fire safe to API 607 (requires -24 suffix)

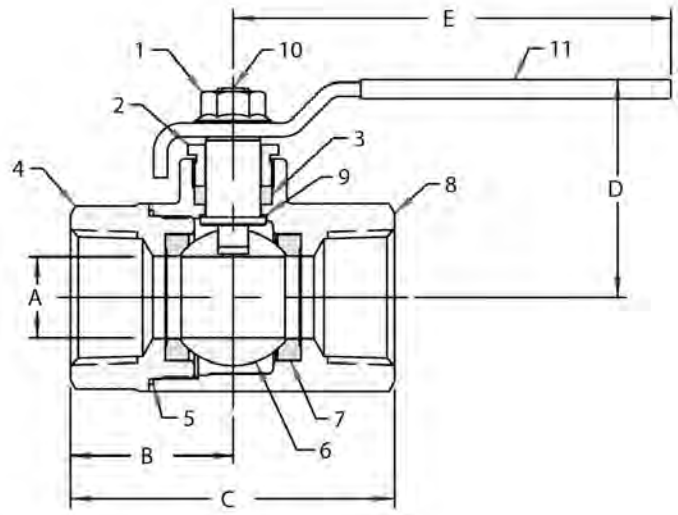

STANDARD MATERIAL LIST

	PART	MATERIAL
1	Lever nut	Steel, zinc plated
2	Gland nut	A108-CS
3	Stem packing	MPTFE
4	Retainer	A216-WCB
5	Body seal	RPTFE (1/2" to 2")
6	Ball	ASTM A108, Carbon Steel, Chrome Plated or ASTM A276, Type 316 Stainless Steel
7	Seat (2)	RPTFE
8	Body	A105
9	Stem bearing	RPTFE
10	Stem	ASTM A108, Carbon Steel or ASTM A276, Type 316 Stainless Steel
11	Lever/grip	Steel, zinc plated, with vinyl

DIMENSIONS

PART NO.	SIZE	A	B	C	D	E	WT.
73A10101A	1/4"	0.38	1.03	2.05	1.72	3.85	0.58
73A10201A	3/8"	0.38	1.03	2.05	1.72	3.85	0.54
73A10301A	1/2"	0.50	1.12	2.23	1.78	3.88	0.63
73A10401A	3/4"	0.68	1.47	2.97	2.05	4.75	1.27
73A10501A	1"	0.87	1.65	3.32	2.18	4.75	2.20
73A10601	1-1/4"	1.00	1.98	3.97	2.72	5.50	3.74
73A10701	1-1/2"	1.25	2.17	4.35	3.20	7.76	5.30
73A10801	2"	1.50	2.73	5.44	3.27	7.75	8.03

VARIATIONS AVAILABLE

- 73A-140 Series (316 SS Ball & Stem. NACE MR0175 (2000) & MR0103 (2003) compliant)

OPTIONS AVAILABLE

(MORE INFORMATION IN SECTION J)

- Minimum quantities apply
- To specify an option, replace the "01" standard suffix with the suffix of the option.
- To specify multiple options, replace the "01" suffix with the desired suffixes in the numerical order shown below. NOTE: Not all suffixes can be combined together.

(SUFFIX)	OPTION	SIZES
-01	Standard Configuration	All
-P -01	BSPP (Parallel) Thread Connection	All
-T -01	BSPT (Tapered) Thread Connection	All
-02-	Stem Grounded	All
-04-	2-1/4" Stem Extension (Carbon Steel, Zinc Plated)	All
-07-	Steel Tee Handle	1/4" to 1-1/2"
-08-	90º Reversed Stem	All
-10-	SS Lever & Nut	All
-14-	Vented Ball	All
-15-	Wheel Handle, Steel	1/4" to 1-1/2"
-16-	Chain Lever - Vertical	3/4" to 2"
-21-	UHMWPE Trim (non TFE)	All
-24-	Graphite Packing, PTFE Body Seal, RPTFE Bearing (API 607, 6th Edition, ISO 10497:2010)	All
-27-	SS Latch-Lock Lever & Nut	All
-30-	Cam-Lock & Grounded	All
-32-	SS Tee Handle & Nut	All
-35-	PTFE Trim	All
-39-	SS Hi-Rise Locking Round Handle, SS Nut	All
-40-	Cyl-Loc & Grounded	All
-45-	Less Lever & Nut	All
-47-	SS Oval Latch-Lock Handle & Nut	All
-48-	SS Oval Handle (No Latch) & Nut	All
-50-	2-1/4" CS Locking Stem Extension	All
-52-	Two Tack Welds	All
-56-	Multi-Fill Seats	All
-58-	Chain Lever - Horizontal	3/4" to 2"
-60-	Static Grounded Ball & Stem	All
-64-	250# Steam Trim (MPTFE Seats & Packing) Use with 316 SS Ball & Stem Variation	All
-67-	Cleaned for Industrial Gas - CS Valves	All
-UA-	AIS (American Iron & Steel) Compliant	All

Pressure/Temperature Ratings -
Page M-14, Graph No. 13 (1/4" to 1")
Page M-13, Graph No. 11 (1-1/4" to 2")

REV. 18JUL19

76-100 SERIES

STAINLESS STEEL BALL VALVE W/ MOUNTING PAD
1/4" - 1"

Female NPT Thread, 2000 CWP (psig). Cold Non-Shock. (See referenced P/T chart)
150 psig Saturated Steam.
Vacuum Service to 29 inches Hg.
MSS SP-110 Compliant.

FEATURES

- Investment cast components
- Reinforced seats
- Mounting pad for easy actuator mounting
- Blowout-proof stem design
- Adjustable packing gland
- Stainless steel lever and nut
- Fire safe to API 607 (requires -24 suffix)
- Meets NACE MR0175 (2000) & MR0103 (2012)
- CSA CGA 3.16-M88 (Requires "GS" suffix)
- NSF/ANSI/CAN 61 Section 8, Annex G
- NSF/ANSI 372 - Drinking Water System Components - Lead Content

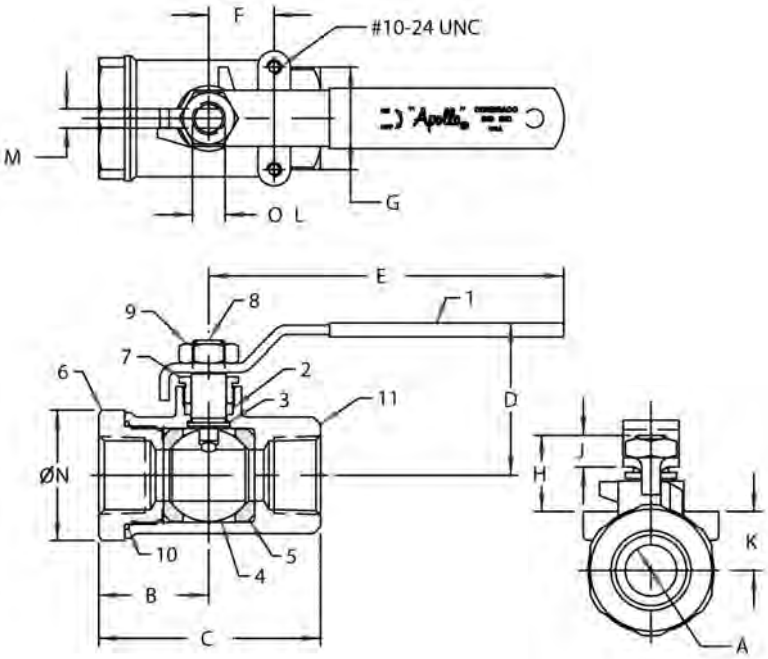

STANDARD MATERIAL LIST

	PART	MATERIAL
1	Lever and grip	304 SS w/vinyl
2	Stem packing	MPTFE
3	Stem bearing	RPTFE
4	Ball	A276-316 Stainless Steel
5	Seat (2)	RPTFE
6	Retainer	A351-CF8M SS or A276-316 SS
7	Gland nut	A276-316 Stainless Steel
8	Stem	A276-316 Stainless Steel
9	Lever nut	18-8 Stainless Steel
10	Body seal	PTFE
11	Body	A351-CF8M Stainless Steel

OPTIONS AVAILABLE

(MORE INFORMATION IN SECTION J)

- Minimum quantities apply
- To specify an option, replace the "01" standard suffix with the suffix of the option.
- To specify multiple options, replace the "01" suffix with the desired suffixes in the numerical order shown below. NOTE: Not all suffixes can be combined together.

(SUFFIX)	OPTION	SIZES
-01	Standard Configuration	All
-P -01-	BSPP (Parallel) Thread Connection	All
-T -01-	BSPT (Tapered) Thread Connection	All
-02-	Stem Grounded	All
-04-	2-1/4" Stem Extension (Carbon Steel, Zinc Plated)	All
-07-	Steel Tee Handle	All
-08-	90º Reversed Stem	All
-14-	Side Vented Ball (Uni-Directional)	All
-15-	Wheel Handle, Steel	All
-16-	Chain Lever - Vertical	3/4" to 2"
-19-	Lock Plate	All
-21-	UHMWPE Trim (Non-PTFE)	All
-24-	Graphite Packing, PTFE Body Seal, RPTFE Bearing (API 607, 6th Edition, ISO 10497:2010)	All
-27-	SS Latch-Lock Lever & Nut	All
-30-	Cam-Lock and Grounded	All
-32-	SS Tee Handle & Nut	All
-35-	PTFE Trim	All
-39-	SS Hi-Rise Locking Wheel Handle, SS Nut	All
-40-	Cyl-Loc and Grounded	All
-44-	Seal Welded	All
-45-	Less Lever & Nut	All
-46-	Latch Lock Lever - Lock in Closed Position Only	All
-47-	SS Latch Lock Oval Handle	All
-48-	SS Oval Handle (No Latch) & Nut	All
-49-	No Lubrication. Assembled Dry.	All
-50-	2-1/4" CS Locking Stem Extension	All
-57-	Oxygen Cleaned	All
-58-	Chain Lever - Horizontal	3/4" to 2"
-60-	Static Grounded Ball & Stem	All
-64-	250# Steam Trim (MPTFE Seats & Packing)	All
-GS-	CSA CGA 3.16	All
-UA-	AIS (American Iron & Steel) Compliant	All

Pressure/Temperature Ratings - Page M-14, Graph No. 14

DIMENSIONS

PART NO.	SIZE	A	B	C	D	E	F	G	H	J	K	L	M	N	WT.
76-101-01A	1/4"	0.37	1.02	2.05	1.71	3.85	0.50	1.12	0.88	0.34	0.53	0.375	0.234	1.16	0.58
76-102-01A	3/8"	0.37	1.02	2.05	1.71	3.85	0.50	1.12	0.88	0.34	0.53	0.375	0.234	1.16	0.55
76-103-01A	1/2"	0.50	1.12	2.23	1.79	3.85	0.50	1.12	0.90	0.34	0.59	0.375	0.234	1.38	0.63
76-104-01A	3/4"	0.68	1.47	2.96	2.03	4.75	0.87	1.37	1.02	0.42	0.78	0.437	0.256	1.75	1.30
76-105-01A	1"	0.87	1.67	3.34	2.16	4.75	0.87	1.37	1.02	0.42	0.91	0.437	0.256	1.94	1.60

**LEAD FREE: The wetted surfaces of this product shall contain no more than 0.25% lead by weighted average. Complies with Federal Public Law 111-380. ANSI 3rd party approved and listed.*

REV. 18JUL19

76-100 SERIES

STAINLESS STEEL BALL VALVE W/ MOUNTING PAD
1-1/4" - 2"

Female NPT Thread, 1500 CWP (psig). Cold Non-Shock. (See referenced P/T chart)
150 psig Saturated Steam.
Vacuum Service to 29 inches Hg.
MSS SP-110 Compliant.

FEATURES

- Investment cast components
- Reinforced seats
- Mounting pad for easy actuator mounting
- Blowout-proof stem design
- Adjustable packing gland
- Stainless steel lever and nut
- Fire safe to API 607 (requires -24 suffix)
- Meets NACE MR0175 (2000) & MR0103 (2012)
- CSA CGA 3.16-M88 (Requires "GS" suffix)
- NSF/ANSI/CAN 61 Section 8, Annex G
- NSF/ANSI 372 - Drinking Water System Components - Lead Content

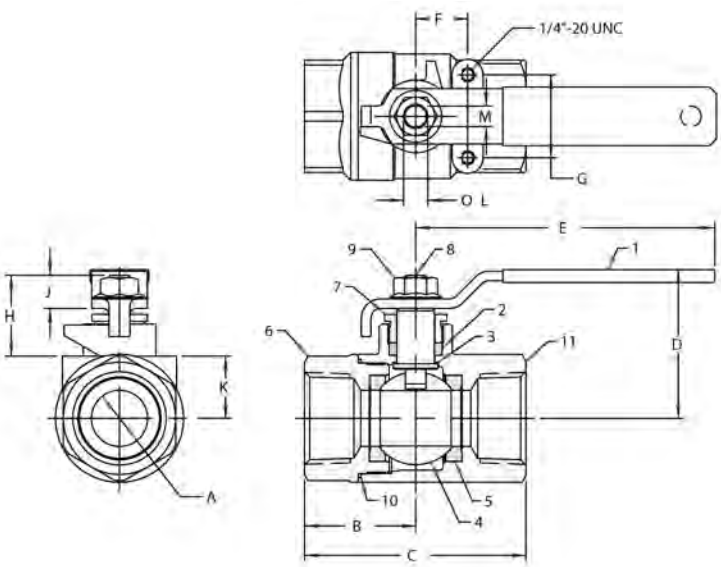

STANDARD MATERIAL LIST

	PART	MATERIAL
1	Lever and grip	304 SS w/vinyl
2	Stem packing	MPTFE
3	Stem bearing	RPTFE
4	Ball	A276-316 Stainless Steel
5	Seat (2)	RPTFE
6	Retainer	A351-CF8M Stainless Steel
7	Gland nut	A276-316 Stainless Steel
8	Stem	A276-316 Stainless Steel
9	Lever nut	18-8 Stainless Steel
10	Body seal	PTFE
11	Body	A351-CF8M Stainless Steel

OPTIONS AVAILABLE

(MORE INFORMATION IN SECTION J)

- Minimum quantities apply
- To specify an option, replace the "01" standard suffix with the suffix of the option.
- To specify multiple options, replace the "01" suffix with the desired suffixes in the numerical order shown below. NOTE: Not all suffixes can be combined together.

(SUFFIX)	OPTION	SIZES
-01	Standard Configuration	All
-P -01-	BSPP (Parallel) Thread Connection	All
-T -01-	BSPT (Tapered) Thread Connection	All
-02-	Stem Grounded	All
-04-	2-1/4" Stem Extension (Carbon Steel, Zinc Plated)	All
-07-	Steel Tee Handle	All
-08-	90º Reversed Stem	All
-14-	Side Vented Ball (Uni-Directional)	All
-15-	Wheel Handle, Steel	All
-16-	Chain Lever - Vertical	All
-19-	Lock Plate	All
-21-	UHMWPE Trim (Non-PTFE)	All
-24-	Graphite Packing, PTFE Body Seal, RPTFE Bearing (API 607, 6th Edition, ISO 10497:2010)	All
-27-	SS Latch-Lock Lever & Nut	All
-30-	Cam-Lock and Grounded	All
-32-	SS Tee Handle & Nut	All
-35-	PTFE Trim	All
-39-	SS Hi-Rise Locking Wheel Handle, SS Nut	All
-40-	Cyl-Loc and Grounded	All
-44-	Seal Welded	All
-45-	Less Lever & Nut	All
-46-	Latch Lock Lever - Lock in Closed Position Only	All
-47-	SS Latch Lock Oval Handle	All
-48-	SS Oval Handle (No Latch) & Nut	All
-49-	No Lubrication. Assembled Dry.	All
-50-	2-1/4" CS Locking Stem Extension	All
-57-	Oxygen Cleaned	All
-58-	Chain Lever - Horizontal	All
-60-	Static Grounded Ball & Stem	All
-64-	250# Steam Trim (MPTFE Seats & Packing)	All
-GS-	CSA CGA 3.16	All
-UA-	AIS (American Iron & Steel) Compliant	All

Pressure/Temperature Ratings - Page M-13, Graph No. 12

DIMENSIONS

PART NO.	SIZE	A	B	C	D	E	F	G	H	J	K	L	M	WT.
76-106-01	1-1/4"	1.00	2.00	4.00	2.68	5.40	0.94	1.50	1.50	0.60	1.12	0.625	0.377	3.10
76-107-01	1-1/2"	1.25	2.17	4.34	3.25	7.75	0.94	1.50	1.50	0.60	1.28	0.625	0.377	4.20
76-108-01	2"	1.50	2.69	5.43	3.24	7.75	0.94	1.50	1.46	0.60	1.50	0.625	0.377	6.10

**LEAD FREE: The wetted surfaces of this product shall contain no more than 0.25% lead by weighted average. Complies with Federal Public Law 111-380. ANSI 3rd party approved and listed.*

REV. 18JUL19

76-100 SERIES

STAINLESS STEEL BALL VALVE W/ MOUNTING PAD
2-1/2" - 3"

Female NPT Thread, 1000 CWP (psig). Cold Non-Shock. (See referenced P/T chart)
150 psig Saturated Steam.
Vacuum Service to 29 inches Hg.
MSS SP-110 Compliant.

FEATURES

- Investment cast components
- Reinforced seats
- Mounting pad for easy actuator mounting
- Blowout-proof stem design
- Adjustable packing gland
- Stainless steel lever and nut
- Fire safe to API 607 (requires -24 suffix)
- Meets NACE MR0175 (2000) & MR0103 (2012)
- CSA CGA 3.16-M88 (Requires "GS" suffix)
- NSF/ANSI/CAN 61 Section 8, Annex G
- NSF/ANSI 372 - Drinking Water System Components - Lead Content

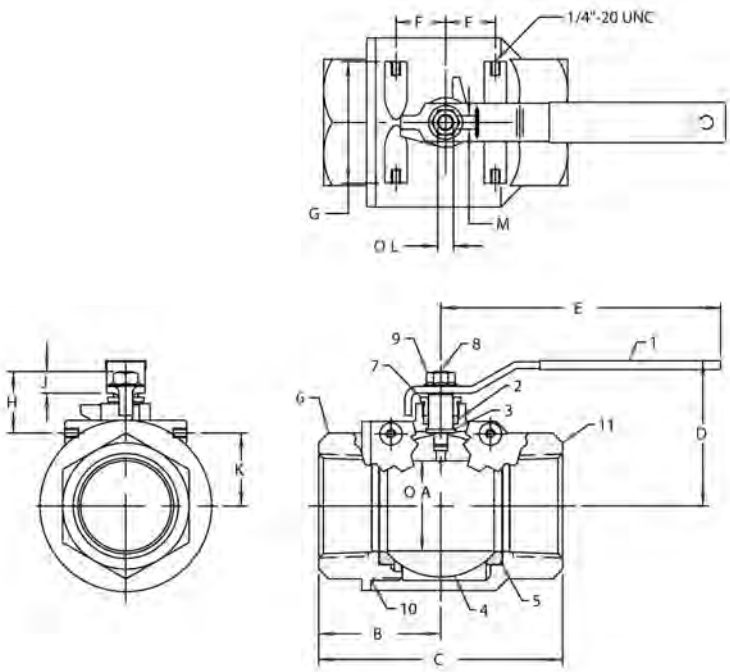

STANDARD MATERIAL LIST

	PART	MATERIAL
1	Lever and grip	304 SS w/vinyl
2	Stem packing	MPTFE
3	Stem bearing	RPTFE
4	Ball	A276-316 Stainless Steel
5	Seat (2)	RPTFE
6	Retainer	A351-CF8M Stainless Steel
7	Gland nut	A276-316 Stainless Steel
8	Stem	A276-316 Stainless Steel
9	Lever nut	18-8 Stainless Steel
10	Body seal	PTFE
11	Body	A351-CF8M Stainless Steel

OPTIONS AVAILABLE

(MORE INFORMATION IN SECTION J)

- Minimum quantities apply
- To specify an option, replace the "01" standard suffix with the suffix of the option.
- To specify multiple options, replace the "01" suffix with the desired suffixes in the numerical order shown below. NOTE: Not all suffixes can be combined together.

(SUFFIX)	OPTION	SIZES
-01	Standard Configuration	All
-02-	Stem Grounded	All
-04-	2-1/4" Stem Extension (Carbon Steel, Zinc Plated)	All
-07-	Steel Tee Handle	All
-08-	90º Reversed Stem	All
-14-	Side Vented Ball (Uni-Directional)	All
-15-	Wheel Handle, Steel	All
-16-	Chain Lever - Vertical	All
-19-	Lock Plate	All
-21-	UHMWPE Trim (Non-PTFE)	All
-24-	Graphite Packing, PTFE Body Seal, RPTFE Bearing (API 607, 6th Edition, ISO 10497:2010)	All
-27-	SS Latch-Lock Lever & Nut	All
-30-	Cam-Lock and Grounded	All
-32-	SS Tee Handle & Nut	All
-35-	PTFE Trim	All
-39-	SS Hi-Rise Locking Wheel Handle, SS Nut	All
-40-	Cyl-Loc and Grounded	All
-44-	Seal Welded	All
-45-	Less Lever & Nut	All
-46-	Latch Lock Lever - Lock in Closed Position Only	All
-47-	SS Latch Lock Oval Handle	All
-48-	SS Oval Handle (No Latch) & Nut	All
-49-	No Lubrication. Assembled Dry.	All
-50-	2-1/4" CS Locking Stem Extension	All
-57-	Oxygen Cleaned	All
-58-	Chain Lever - Horizontal	All
-60-	Static Grounded Ball & Stem	All
-64-	250# Steam Trim (MPTFE Seats & Packing)	All
-GS-	CSA CGA 3.16	All
-UA-	AIS (American Iron & Steel) Compliant	All

Pressure/Temperature Ratings - Page M-12, Graph No. 8

DIMENSIONS

PART NO.	SIZE	A	B	C	D	E	F	G	H	J	K	L	M	WT.
76-109-01	2-1/2"	2.50	3.38	6.75	4.03	7.75	1.38	3.37	1.71	0.60	2.00	0.625	0.377	15.60
76-100-01	3"	2.50	3.38	6.75	4.03	7.75	1.38	3.37	1.71	0.60	2.00	0.625	0.377	16.50

**LEAD FREE: The wetted surfaces of this product shall contain no more than 0.25% lead by weighted average. Complies with Federal Public Law 111-380. ANSI 3rd party approved and listed.*

REV. 18JUL19

aalberts integrated piping systems

76-AR SERIES

STAINLESS STEEL STD. PORT BALL VALVE
W/ ACTUATOR READY ISO MOUNTING PAD

5 YEAR WARRANTY MADE IN USA

Female NPT Thread, 1/4"-1" 2000 CWP (psig), 1-1/4"-2" 1500 CWP (psig), 2-1/2"-3" 1000 CWP (psig). Cold Non-Shock.
250 psig Saturated Steam. (See referenced P/T chart)
Vacuum Service to 29 inches Hg.
MSS SP-110 Compliant.

FEATURES

- Multi-piece packing set
- ISO 5211 mounting pad
- Blowout-proof stem design
- Fire safe "by design" (requires -24 suffix)
- Adjustable packing gland
- Live loaded packing

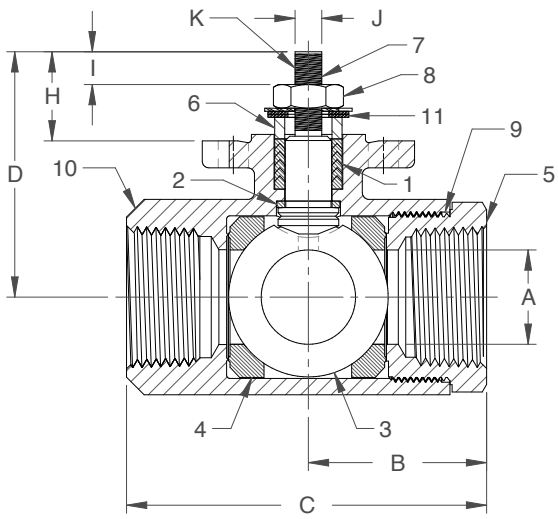

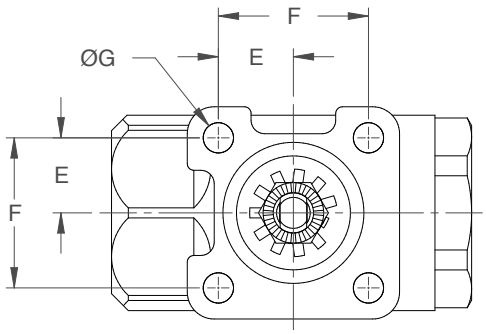

OPTIONS AVAILABLE

(MORE INFORMATION IN SECTION J)

- Minimum quantities apply
- To specify an option, replace the "01" standard suffix with the suffix of the option.
- To specify multiple options, replace the "01" suffix with the desired suffixes in the numerical order shown below. NOTE: Not all suffixes can be combined together.

(SUFFIX)	OPTION	SIZES
-64	Standard Configuration (Bare Stem)	All
-14-	Vented Ball	All
-24-	Graphite Packing (Fire Safe "By Design")	All
-27-	Latch Lock Handle	1/4" to 2"
-35-	PTFE Seats	All
-49-	No Lubrication. Assembled Dry.	All
-57-	Oxygen Cleaned	All

STANDARD MATERIAL LIST

	PART	MATERIAL
1	Stem packing	MPTFE
2	Stem bearing	PEEK/PTFE
3	Ball	316 SS
4	Seat (2)	MPTFE
5	Retainer	A276-316 (1/4" to 1") A351-CF8M (1-1/4" to 3")
6	Gland	A276-316
7	Stem	A276-316
8	Jam nut	SS
9	Body seal	PTFE (1-1/4" to 3")
10	Body	A351-CF8M
11	Bellville Washers(s)	Stainless Steel

Pressure/Temperature Ratings -
Page M-14, Graph No. 14 (1/4" to 1")
Page M-13, Graph No. 12 (1-1/4" to 2")
Page M-12, Graph No. 8 (2-1/2" to 3")

DIMENSIONS

PART NO.	SIZE	A	B	C	D	E	F	G	H	I	J (FLATS)	K (THREADS) UNF	WT.
76-AR1-64	1/4"	0.37	1.02	2.04	1.40	0.59	1.17	0.28	0.61	0.18	.247/.249	3/8-24	0.52
76-AR2-64	3/8"	0.37	1.02	2.04	1.40	0.59	1.17	0.28	0.61	0.18	.247/.249	3/8-24	0.48
76-AR3-64	1/2"	0.50	1.12	2.23	1.54	0.59	1.17	0.28	0.61	0.16	.247/.249	3/8-24	0.58
76-AR4-64	3/4"	0.68	1.47	2.96	2.16	0.70	1.39	0.28	0.84	0.37	.247/.249	3/8-24	1.26
76-AR5-64	1"	0.87	1.66	3.34	2.28	0.70	1.39	0.28	0.82	0.37	.247/.249	3/8-24	1.62
76-AR6-64	1-1/4"	1.00	2.00	4.00	2.92	0.98	1.95	0.34	1.16	0.37	.370/.372	5/8-18	3.22
76-AR7-64	1-1/2"	1.25	2.18	4.34	3.16	0.98	1.95	0.34	1.16	0.37	.370/.372	5/8-18	4.06
76-AR8-64	2"	1.50	2.75	5.43	3.32	0.98	1.95	0.34	1.16	0.37	.370/.372	5/8-18	6.18
76-AR9-64	2-1/2"	2.00	3.12	6.25	3.85	0.98	1.95	0.34	1.16	0.37	.370/.372	5/8-18	12.96
76-AR0-64	3"	2.50	3.37	6.75	4.18	0.98	1.95	0.34	1.16	0.37	.370/.372	5/8-18	17.06

76F-100-A SERIES

STAINLESS STEEL FULL PORT BALL VALVE

Female NPT Thread, 1/4"-3" 1000 CWP (psig), Cold Non-Shock. (See referenced P/T chart)
150 psig Saturated Steam.
Vacuum Service to 29 inches Hg.
MSS SP-110 Compliant.
Designed, cast, machined, assembled, and 100% factory tested in USA.

FEATURES

- Investment cast components
- Reinforced seats
- Blowout-proof stem design
- Adjustable packing gland
- Stainless steel lever and nut
- Fire safe to API 607 (requires -24 suffix)
- Meets NACE MR0175 (2000) & MR0103 (2012)
- CSA CGA 3.16-M88 (Requires "GS" suffix)
- NSF/ANSI/CAN 61 Section 8, Annex G (1/4" to 2")
- NSF/ANSI 372 - Drinking Water System Components - Lead Content

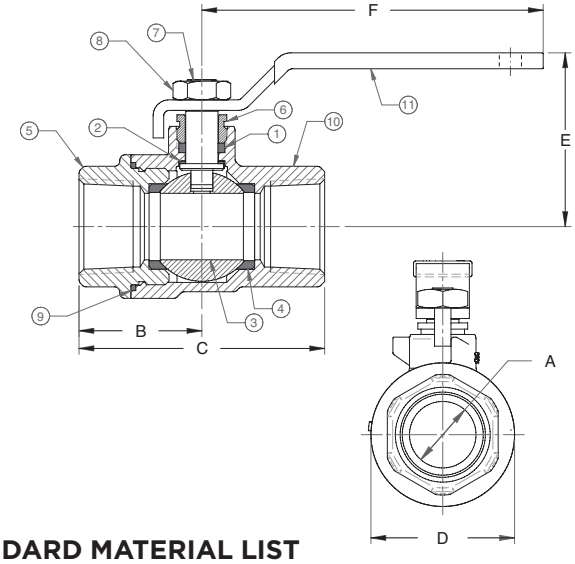

STANDARD MATERIAL LIST

	PART	MATERIAL
1	Stem packing	MPTFE
2	Stem bearing	RPTFE
3	Ball	A276-316SS (1/4" to 2", except 1-1/4") A276-316SS or A351-CF8M stainless (1-1/4") A351-CF8M stainless (3")
4	Seat (2)	RPTFE (2" & smaller); RTFM (3")
5	Retainer	ASTM A276-316SS (1/4" & 3/8") ASTM A351-CF8M stainless (1/2" to 3")
6	Gland	A276-316 Stainless Steel
7	Stem	A276-316 Stainless Steel
8	Lever nut	304 Stainless Steel
9	Body Seal	RPTFE (1/2" to 3")
10	Body	A351-CF8M
11	Lever and grip	SS w/vinyl

DIMENSIONS

PART NO.	SIZE	A	B	C	D	E	F	WT.
76F-101-01	1/4"	0.37	0.95	1.91	1.12	1.60	3.85	0.47
76F-102-01	3/8"	0.37	0.95	1.91	1.12	1.60	3.85	0.44
76F-103-01A	1/2"	0.50	1.21	2.35	1.27	1.73	3.85	0.57
76F-104-01A	3/4"	0.81	1.39	2.77	1.62	1.96	3.85	0.91
76F-105-01A	1"	1.00	1.67	3.34	2.00	2.27	4.75	1.38
76F-106-01A	1-1/4"	1.25	1.96	3.92	2.73	3.21	7.77	4.17
76F-107-01A	1-1/2"	1.50	2.05	4.10	2.92	3.31	7.77	4.69
76F-108-01A	2"	2.00	2.37	4.74	3.75	3.69	7.77	6.90
76F-100-01A	3"	3.00	3.70	7.40	5.68	5.23	10.00	22.40

OPTIONS AVAILABLE

(MORE INFORMATION IN SECTION J)

- Minimum quantities apply
- To specify an option, replace the "01" standard suffix with the suffix of the option.
- To specify multiple options, replace the "01" suffix with the desired suffixes in the numerical order shown below. NOTE: Not all suffixes can be combined together.

(SUFFIX)	OPTION	SIZES
-01	Standard Configuration	All
-P -01-	BSPP (Parallel) Thread Connection	1/2" to 2"
-T -01-	BSPT (Tapered) Thread Connection	1/2" to 3"
-02-	Stem Grounded	1/2" to 3"
-04-	2-1/4" Stem Extension (Carbon Steel, Zinc Plated)	1/2" to 2"
-08-	90º Reversed Stem	1/2" to 2"
-11-	Therma-Seal™ Insulating Tee Handle	1/4" to 2"
-14-	Side Vented Ball (Uni-Directional)	3/8" to 3"
-24-	Graphite Packing, PTFE Body Seal, RPTFE Bearing (API 607, 6th Edition, ISO 10497:2010)	1/2" to 3"
-27-	SS Latch-Lock Lever & Nut	3/8" to 3"
-30-	Cam-Lock and Grounded	1/2" to 2"
-32-	SS Tee Handle & Nut	1/2" to 2"
-35-	PTFE Trim	3"
-39-	SS Hi-Rise Locking Wheel Handle, SS Nut	1/2" to 2"
-40-	Cyl-Loc and Grounded	1/2" to 2"
-44-	Seal Welded	All
-45-	Less Lever & Nut	1/2" to 3"
-46-	Latch Lock Lever - Lock in Closed Position Only	1/2" to 2"
-47-	SS Latch Lock Oval Handle	1/2" to 2"
-48-	SS Oval Handle (No Latch) & Nut	1/4" to 2"
-49-	No Lubrication. Assembled Dry.	1/2" to 3"
-50-	2-1/4" CS Locking Stem Extension	1/2" to 2"
-56-	Multifill Seats & Packing	1/2" to 3"
-57-	Oxygen Cleaned	All
-60-	Static Grounded Ball & Stem	1/2" to 3"
-GS-	CSA CGA 3.16 (RTFE Seat - All sizes)	All
-UA-	AIS (American Iron & Steel) Compliant	All

Pressure/Temperature Ratings - Page M-12, Graph No. 8

**LEAD FREE: The wetted surfaces of this product shall contain no more than 0.25% lead by weighted average. Complies with Federal Public Law 111-380. ANSI 3rd party approved and listed.*

REV. 18JUL19

aalberts integrated piping systems

76FJ-100-A SERIES

DUPLEX STAINLESS STEEL FULL PORT BALL VALVE

Female NPT Thread, 1/4"-3" 1000 CWP (psig), Cold Non-Shock, (See referenced P/T chart)
150 psig Saturated Steam.
Vacuum Service to 29 inches Hg.
MSS SP-110 Compliant.
Designed, cast, machined, assembled, and 100% factory tested in USA.

FEATURES

- Investment cast components
- Reinforced seats
- Two-piece body
- Blowout-proof stem design
- Fire safe "by design" (requires -24 suffix)
- Adjustable packing gland
- Stainless steel lever and nut

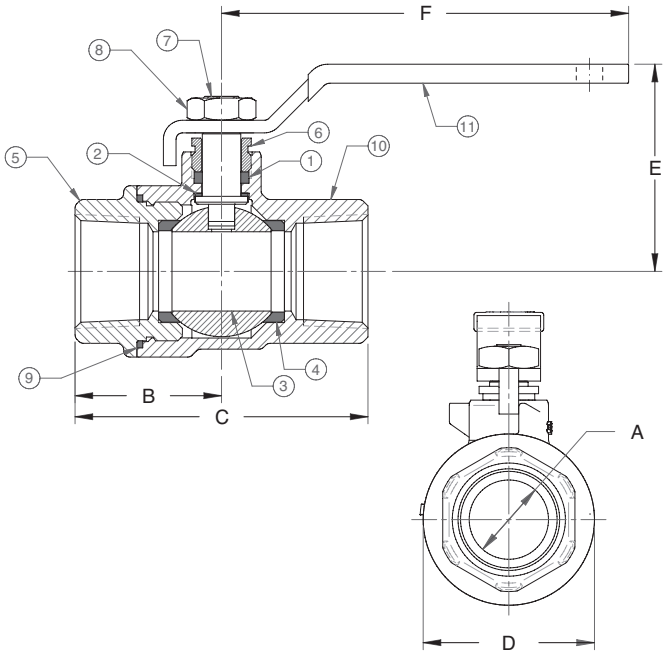

OPTIONS AVAILABLE

(MORE INFORMATION IN SECTION J)

- Minimum quantities apply
- To specify an option, replace the "01" standard suffix with the suffix of the option.
- To specify multiple options, replace the "01" suffix with the desired suffixes in the numerical order shown below. NOTE: Not all suffixes can be combined together.

(SUFFIX)	OPTION	SIZES
-01	Standard Configuration	All
-P -01-	BSPP (Parallel) Thread Connection	1/2" to 2"
-T -01-	BSPT (Tapered) Thread Connection	1/2" to 3"
-02-	Stem Grounded	1/2" to 3"
-04-	2-1/4" Stem Extension (Carbon Steel, Zinc Plated)	1/2" to 2"
-08-	90º Reversed Stem	1/2" to 2"
-11-	Therma-Seal™ Insulating Tee Handle	1/4" to 2"
-14-	Side Vented Ball (Uni-Directional)	1/2" to 3"
-24-	Graphite Packing (Fire Safe "By Design")	1/2" to 3"
-27-	SS Latch-Lock Lever & Nut	1/2" to 3"
-30-	Cam-Lock and Grounded	1/2" to 2"
-32-	SS Tee Handle & Nut	1/2" to 2"
-35-	PTFE Trim	3"
-39-	SS Hi-Rise Locking Wheel Handle, SS Nut	1/2" to 2"
-40-	Cyl-Loc and Grounded	1/2" to 2"
-44-	Seal Welded	All
-45-	Less Lever & Nut	1/2" to 3"
-46-	Latch Lock Lever - Lock in Closed Position Only	1/2" to 2"
-47-	SS Latch Lock Oval Handle	1/2" to 2"
-48-	SS Oval Handle (No Latch) & Nut	1/2" to 2"
-49-	No Lubrication. Assembled Dry.	1/2" to 3"
-56-	Multifill Seats & Packing	1/2" to 3"
-60-	Static Grounded Ball & Stem	1/2" to 3"

Pressure/Temperature Ratings - Page M-30, Graph No. 45

STANDARD MATERIAL LIST

	PART	MATERIAL
1	Stem packing	MPTFE
2	Stem bearing	RPTFE
3	Ball	ASTM A276/A479 Alloy 2205
4	Seat (2)	RPTFE (2" & smaller); RTFM (3")
5	Retainer	ASTM A995 4A
6	Gland	A276-316 SS
7	Stem	ASTM A276/A479 Alloy 2205
8	Lever nut	304 SS
9	Body Seal	RPTFE (1/2" to 2")
10	Body	ASTM A995 4A
11	Lever and grip	SS w/vinyl

DIMENSIONS

PART NO.	SIZE	A	B	C	D	E	F	WT.
76FJ-101-01	1/4"	0.37	0.95	1.91	1.12	1.60	3.85	0.47
76FJ-102-01	3/8"	0.37	0.95	1.91	1.12	1.60	3.85	0.44
76FJ-103-01A	1/2"	0.50	1.21	2.35	1.27	1.73	3.85	0.57
76FJ-104-01A	3/4"	0.81	1.39	2.77	1.62	1.96	3.85	0.91
76FJ-105-01A	1"	1.00	1.67	3.34	2.00	2.27	4.75	1.38
76FJ-106-01A	1-1/4"	1.25	1.96	3.92	2.73	3.21	7.77	4.17
76FJ-107-01A	1-1/2"	1.50	2.05	4.10	2.92	3.31	7.77	4.69
76FJ-108-01A	2"	2.00	2.37	4.74	3.75	3.69	7.77	6.90
76FJ-100-01A	3"	3.00	3.70	7.40	5.68	5.23	10.00	22.40

76FK-100-A SERIES

SUPER DUPLEX STAINLESS STEEL FULL PORT BALL VALVE

5 YEAR WARRANTY MADE IN USA

Female NPT Thread, 1/4"-3" 1000 CWP (psig), Cold Non-Shock. (See referenced P/T chart)
150 psig Saturated Steam.
Vacuum Service to 29 inches Hg.
MSS SP-110 Compliant.
Designed, cast, machined, assembled, and 100% factory tested in USA.

FEATURES

- Investment cast components
- Reinforced seats
- Two-piece body
- Blowout-proof stem design
- Fire safe "by design" (requires -24 suffix)
- Adjustable packing gland
- Stainless steel lever and nut

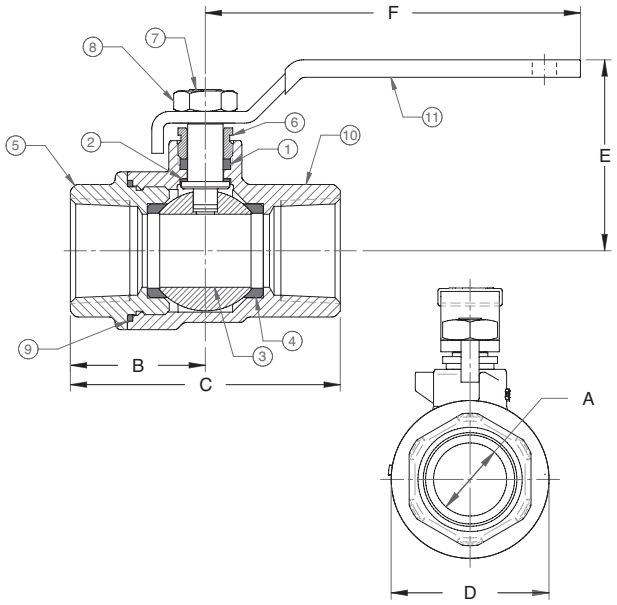

OPTIONS AVAILABLE

(MORE INFORMATION IN SECTION J)

- Minimum quantities apply
- To specify an option, replace the "01" standard suffix with the suffix of the option.
- To specify multiple options, replace the "01" suffix with the desired suffixes in the numerical order shown below. NOTE: Not all suffixes can be combined together.

(SUFFIX)	OPTION	SIZES
-01	Standard Configuration	All
-P -01-	BSPP (Parallel) Thread Connection	1/2" to 2"
-T -01-	BSPT (Tapered) Thread Connection	1/2" to 3"
-02-	Stem Grounded	1/2" to 3"
-04-	2-1/4" Stem Extension (Carbon Steel, Zinc Plated)	1/2" to 2"
-08-	90º Reversed Stem	1/2" to 2"
-11-	Therma-Seal™ Insulating Tee Handle	1/4" to 2"
-14-	Side Vented Ball (Uni-Directional)	1/2" to 3"
-24-	Graphite Packing (Fire Safe "By Design")	1/2" to 3"
-27-	SS Latch-Lock Lever & Nut	1/2" to 3"
-30-	Cam-Lock and Grounded	1/2" to 2"
-32-	SS Tee Handle & Nut	1/2" to 2"
-35-	PTFE Trim	3"
-39-	SS Hi-Rise Locking Wheel Handle, SS Nut	1/2" to 2"
-40-	Cyl-Loc and Grounded	1/2" to 2"
-44-	Seal Welded	All
-45-	Less Lever & Nut	1/2" to 3"
-46-	Latch Lock Lever - Lock in Closed Position Only	1/2" to 2"
-47-	SS Latch Lock Oval Handle	1/2" to 2"
-48-	SS Oval Handle (No Latch) & Nut	1/2" to 2"
-49-	No Lubrication. Assembled Dry.	1/2" to 3"
-56-	Multifill Seats & Packing	1/2" to 3"
-60-	Static Grounded Ball & Stem	1/2" to 3"

Pressure/Temperature Ratings - Page M-30, Graph No. 45

STANDARD MATERIAL LIST

	PART	MATERIAL
1	Stem packing	MPTFE
2	Stem bearing	RPTFE
3	Ball	ASTM A276/A479 Alloy 2507
4	Seat (2)	RPTFE (2" & smaller); RTFM (3")
5	Retainer	ASTM A995 6A
6	Gland	A276-316 SS
7	Stem	ASTM A276/A479 Alloy 2507
8	Lever nut	304 SS
9	Body Seal	RPTFE (1/2" to 2")
10	Body	ASTM A995 6A
11	Lever and grip	SS w/vinyl

DIMENSIONS

PART NO.	SIZE	A	B	C	D	E	F	WT.
76FK-101-01	1/4"	0.37	0.95	1.91	1.12	1.60	3.85	0.47
76FK-102-01	3/8"	0.37	0.95	1.91	1.12	1.60	3.85	0.44
76FK-103-01A	1/2"	0.50	1.21	2.35	1.27	1.73	3.85	0.57
76FK-104-01A	3/4"	0.81	1.39	2.77	1.62	1.96	3.85	0.91
76FK-105-01A	1"	1.00	1.67	3.34	2.00	2.27	4.75	1.38
76FK-106-01A	1-1/4"	1.25	1.96	3.92	2.73	3.21	7.77	4.17
76FK-107-01A	1-1/2"	1.50	2.05	4.10	2.92	3.31	7.77	4.69
76FK-108-01A	2"	2.00	2.37	4.74	3.75	3.69	7.77	6.90
76FK-100-01A	3"	3.00	3.70	7.40	5.68	5.23	10.00	22.40

REV. 24MAY17

aalberts integrated piping systems

76J-100-A SERIES

DUPLEX STAINLESS STEEL BALL VALVE W/ MOUNTING PAD
1/4" - 1"

Female NPT Thread, 2000 CWP (psig). Cold Non-Shock. (See referenced P/T chart)
150 psig Saturated Steam.
Vacuum Service to 29 inches Hg.
MSS SP-110 Compliant.

FEATURES

- Investment cast components
- Reinforced seats
- Mounting pad for easy actuator mounting
- Blowout-proof stem design
- Fire safe "by design" (requires -24 suffix)
- Adjustable packing gland
- Stainless steel lever and nut

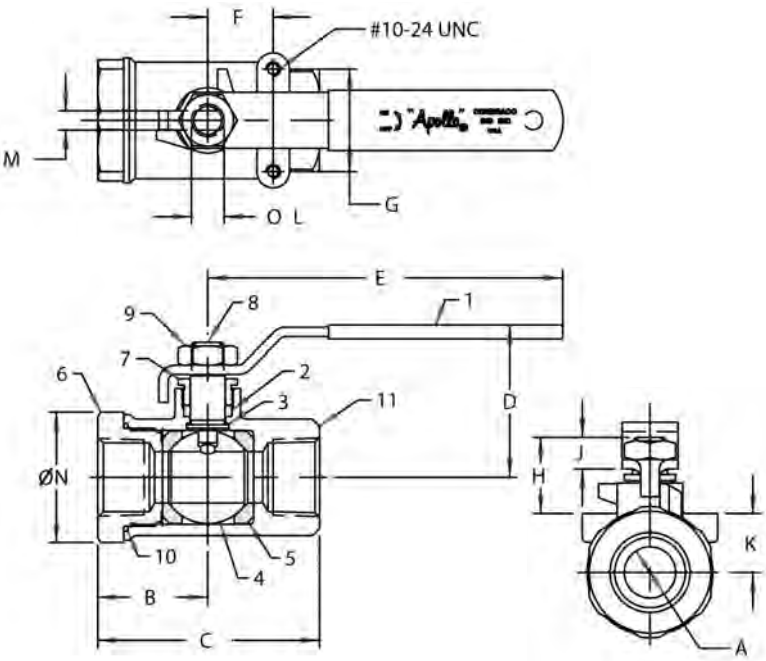

DIMENSIONS

	PART	MATERIAL
1	Lever and grip	304 SS w/vinyl
2	Stem packing	MPTFE
3	Stem bearing	RPTFE
4	Ball	ASTM A276/A479 Alloy 2205
5	Seat (2)	RPTFE
6	Retainer	ASTM A995 4A
7	Gland nut	A276-316
8	Stem	ASTM A276/A479 Alloy 2205
9	Lever nut	18-8 SS
10	Body seal	PTFE
11	Body	ASTM A995 4A

OPTIONS AVAILABLE

(MORE INFORMATION IN SECTION J)

- Minimum quantities apply
- To specify an option, replace the "01" standard suffix with the suffix of the option.
- To specify multiple options, replace the "01" suffix with the desired suffixes in the numerical order shown below. NOTE: Not all suffixes can be combined together.

(SUFFIX)	OPTION	SIZES
-01	Standard Configuration	All
-P -01-	BSPP (Parallel) Thread Connection	All
-T -01-	BSPT (Tapered) Thread Connection	All
-02-	Stem Grounded	All
-04-	2-1/4" Stem Extension (Carbon Steel, Zinc Plated)	All
-07-	Steel Tee Handle	All
-08-	90º Reversed Stem	All
-14-	Side Vented Ball (Uni-Directional)	All
-15-	Wheel Handle, Steel	All
-16-	Chain Lever - Vertical	3/4" to 1"
-19-	Lock Plate	All
-21-	UHMWPE Trim (Non-PTFE)	All
-24-	Graphite Packing (Fire Safe "By Design")	All
-27-	SS Latch-Lock Lever & Nut	All
-30-	Cam-Lock and Grounded	All
-32-	SS Tee Handle & Nut	All
-35-	PTFE Trim	All
-39-	SS Hi-Rise Locking Wheel Handle, SS Nut	All
-40-	Cyl-Loc and Grounded	All
-44-	Seal Welded	All
-45-	Less Lever & Nut	All
-46-	Latch Lock Lever - Lock in Closed Position Only	All
-47-	SS Latch Lock Oval Handle	All
-48-	SS Oval Handle (No Latch) & Nut	All
-49-	No Lubrication. Assembled Dry.	All
-50-	2-1/4" CS Locking Stem Extension	All
-57-	Oxygen Cleaned	All
-58-	Chain Lever - Horizontal	3/4" to 1"
-60-	Static Grounded Ball & Stem	All
-64-	250# Steam Trim (MPTFE Seats & Packing)	All

Pressure/Temperature Ratings - Page M-29, Graph No. 43

DIMENSIONS

PART NO.	SIZE	A	B	C	D	E	F	G	H	J	K	L	M	N	WT.
76J-101-01A	1/4"	0.37	1.02	2.05	1.71	3.85	0.50	1.12	0.88	0.34	0.53	0.375	0.234	1.16	0.58
76J-102-01A	3/8"	0.37	1.02	2.05	1.71	3.85	0.50	1.12	0.88	0.34	0.53	0.375	0.234	1.16	0.55
76J-103-01A	1/2"	0.50	1.12	2.23	1.79	3.85	0.50	1.12	0.90	0.34	0.59	0.375	0.234	1.38	0.63
76J-104-01A	3/4"	0.68	1.47	2.96	2.03	4.75	0.87	1.37	1.02	0.42	0.78	0.437	0.256	1.75	1.30
76J-105-01A	1"	0.87	1.67	3.34	2.16	4.75	0.87	1.37	1.02	0.42	0.91	0.437	0.256	1.94	1.60

76J-100 SERIES

DUPLEX STAINLESS STEEL BALL VALVE W/ MOUNTING PAD
1-1/4" - 2"

5 YEAR WARRANTY MADE IN USA

Female NPT Thread, 1500 CWP (psig). Cold Non-Shock. (See referenced P/T chart)
150 psig Saturated Steam.
Vacuum Service to 29 inches Hg.
MSS SP-110 Compliant.

FEATURES

- Investment cast components
- Reinforced seats
- Mounting pad for easy actuator mounting
- Blowout-proof stem design
- Fire safe "by design" (requires -24 suffix)
- Adjustable packing gland
- Stainless steel lever and nut

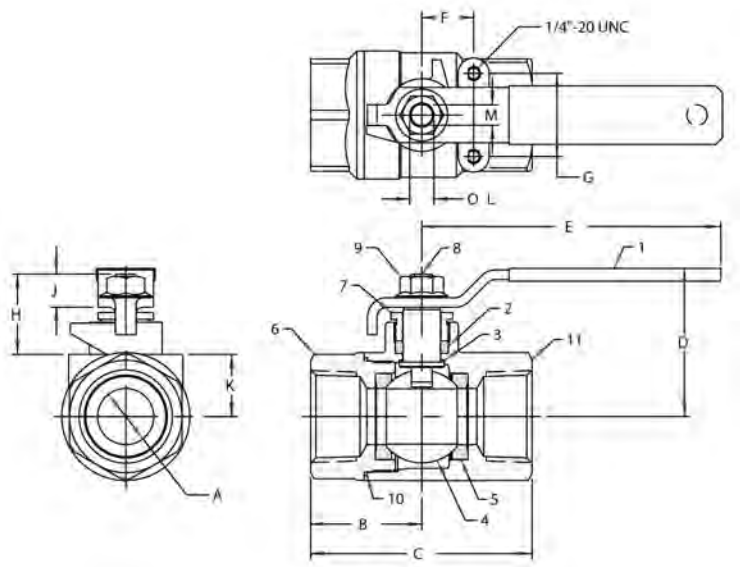

OPTIONS AVAILABLE

(MORE INFORMATION IN SECTION J)

- Minimum quantities apply
- To specify an option, replace the "01" standard suffix with the suffix of the option.
- To specify multiple options, replace the "01" suffix with the desired suffixes in the numerical order shown below. NOTE: Not all suffixes can be combined together.

(SUFFIX)	OPTION	SIZES
-01	Standard Configuration	All
-P -01-	BSPP (Parallel) Thread Connection	All
-T -01-	BSPT (Tapered) Thread Connection	All
-02-	Stem Grounded	All
-04-	2-1/4" Stem Extension (Carbon Steel, Zinc Plated)	All
-07-	Steel Tee Handle	All
-08-	90º Reversed Stem	All
-14-	Side Vented Ball (Uni-Directional)	All
-15-	Wheel Handle, Steel	All
-16-	Chain Lever - Vertical	All
-19-	Lock Plate	All
-21-	UHMWPE Trim (Non-PTFE)	All
-24-	Graphite Packing (Fire Safe "By Design")	All
-27-	SS Latch-Lock Lever & Nut	All
-30-	Cam-Lock and Grounded	All
-32-	SS Tee Handle & Nut	All
-35-	PTFE Trim	All
-39-	SS Hi-Rise Locking Wheel Handle, SS Nut	All
-40-	Cyl-Loc and Grounded	All
-44-	Seal Welded	All
-45-	Less Lever & Nut	All
-46-	Latch Lock Lever - Lock in Closed Position Only	All
-47-	SS Latch Lock Oval Handle	All
-48-	SS Oval Handle (No Latch) & Nut	All
-49-	No Lubrication. Assembled Dry.	All
-50-	2-1/4" CS Locking Stem Extension	All
-57-	Oxygen Cleaned	All
-58-	Chain Lever - Horizontal	All
-60-	Static Grounded Ball & Stem	All
-64-	250# Steam Trim (MPTFE Seats & Packing)	All

Pressure/Temperature Ratings - Page M-30, Graph No. 44

STANDARD MATERIAL LIST

	PART	MATERIAL
1	Lever and grip	304 SS w/vinyl
2	Stem packing	MPTFE
3	Stem bearing	RPTFE
4	Ball	ASTM A276/A479 Alloy 2205
5	Seat (2)	RPTFE
6	Retainer	ASTM A995 4A
7	Gland nut	A276-316 SS
8	Stem	ASTM A276/A479 Alloy 2205
9	Lever nut	18-8 SS
10	Body seal	PTFE
11	Body	ASTM A995 4A

DIMENSIONS

PART NO.	SIZE	A	B	C	D	E	F	G	H	J	K	L	M	WT.
76J-106-01	1-1/4"	1.00	2.00	4.00	2.68	5.40	0.94	1.50	1.50	0.60	1.12	0.625	0.377	3.10
76J-107-01	1-1/2"	1.25	2.17	4.34	3.25	7.75	0.94	1.50	1.50	0.60	1.28	0.625	0.377	4.20
76J-108-01	2"	1.50	2.69	5.43	3.24	7.75	0.94	1.50	1.46	0.60	1.50	0.625	0.377	6.10

aalberts integrated piping systems

76J-100 SERIES

DUPLEX STAINLESS STEEL BALL VALVE
2-1/2" - 3"

Female NPT Thread, 1000 CWP (psig). Cold Non-Shock. (See referenced P/T chart)
150 psig Saturated Steam.
Vacuum Service to 29 inches Hg.
MSS SP-110 Compliant.

FEATURES

- Investment cast components
- Reinforced seats
- Mounting pad for easy actuator mounting
- Blowout-proof stem design
- Fire safe "by design" (requires -24 suffix)
- Adjustable packing gland
- Stainless steel lever and nut

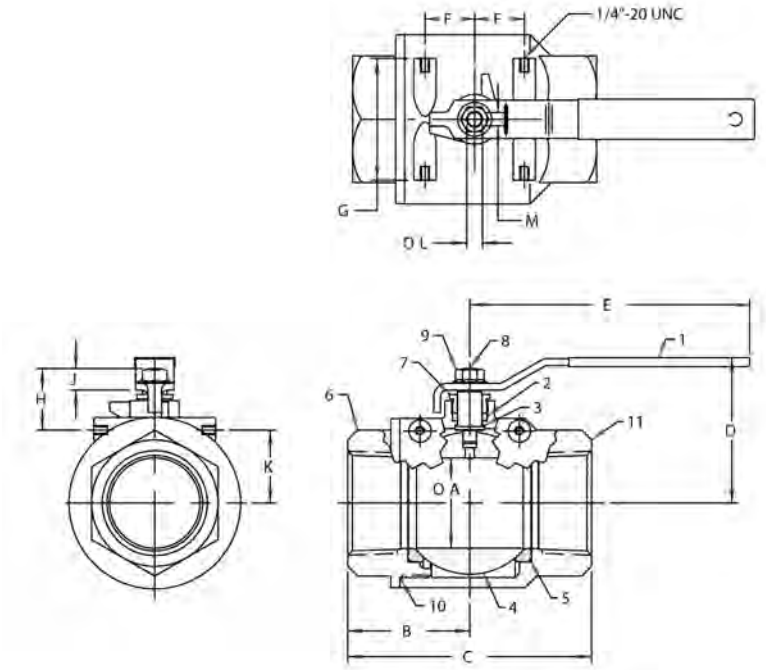

OPTIONS AVAILABLE

(MORE INFORMATION IN SECTION J)

- Minimum quantities apply
- To specify an option, replace the "01" standard suffix with the suffix of the option.
- To specify multiple options, replace the "01" suffix with the desired suffixes in the numerical order shown below. NOTE: Not all suffixes can be combined together.

(SUFFIX)	OPTION	SIZES
-01	Standard Configuration	All
-02-	Stem Grounded	All
-04-	2-1/4" Stem Extension (Carbon Steel, Zinc Plated)	All
-08-	90º Reversed Stem	All
-21-	UHMWPE Trim (Non-PTFE)	All
-24-	Graphite Packing (Fire Safe "By Design")	All
-27-	SS Latch-Lock Lever & Nut	All
-35-	PTFE Trim	All
-45-	Less Lever & Nut	All
-46-	Latch Lock Lever - Lock in Closed Position Only	All
-49-	No Lubrication. Assembled Dry.	All
-50-	2-1/4" CS Locking Stem Extension	All
-57-	Oxygen Cleaned	All
-60-	Static Grounded Ball & Stem	All
-64-	250# Steam Trim (MPTFE Seats & Packing)	All

Pressure/Temperature Ratings - Page M-30, Graph No. 45

STANDARD MATERIAL LIST

	PART	MATERIAL
1	Lever and grip	304 SS w/vinyl
2	Stem packing	MPTFE
3	Stem bearing	RPTFE
4	Ball	ASTM A276/A479 Alloy 2205
5	Seat (2)	RPTFE
6	Retainer	ASTM A995 4A
7	Gland nut	ASTM A276-316 SS
8	Stem	ASTM A276/A479 Alloy 2205
9	Lever nut	18-8 SS
10	Body seal	PTFE
11	Body	ASTM A995 4A

DIMENSIONS

PART NO.	SIZE	A	B	C	D	E	F	G	H	J	K	L	M	WT.
76J-109-01	2-1/2"	2.50	3.38	6.75	4.03	7.75	1.38	3.37	1.71	0.60	2.00	0.625	0.377	15.60
76J-100-01	3"	2.50	3.38	6.75	4.03	7.75	1.38	3.37	1.71	0.60	2.00	0.625	0.377	16.50

76J-AR SERIES

DUPLEX STAINLESS STEEL STD. PORT BALL VALVE
W/ ACTUATOR READY ISO MOUNTING PAD

5 YEAR WARRANTY MADE IN USA

Female NPT Thread, 1/4"-1" 2000 CWP (psig), 1-1/4"-2" 1500 CWP (psig), 2-1/2"-3" 1000 CWP (psig). Cold Non-Shock.
250 psig Saturated Steam. (See referenced P/T chart)
Vacuum Service to 29 inches Hg.
MSS SP-110 Compliant.

FEATURES

- Multi-piece packing set
- ISO 5211 mounting pad
- Blowout-proof stem design
- Fire safe "by design" (requires -24 suffix)
- Adjustable packing gland
- Live loaded packing

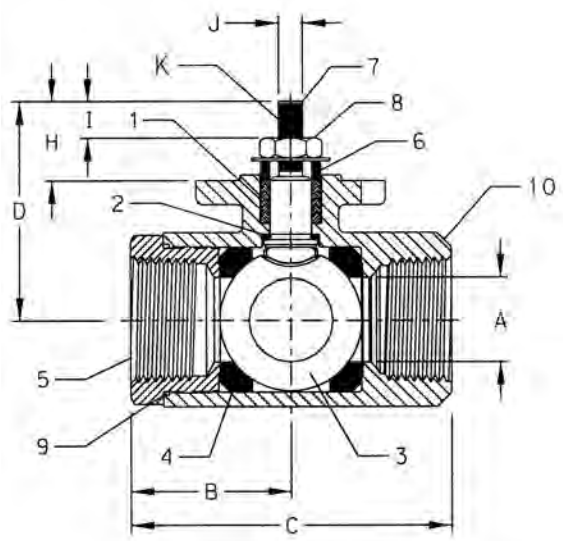

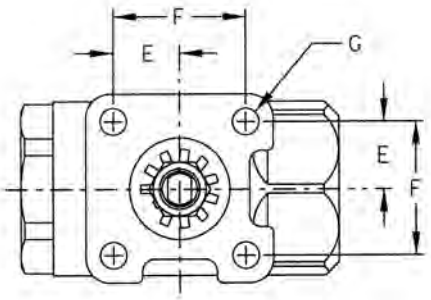

OPTIONS AVAILABLE

(MORE INFORMATION IN SECTION J)

- Minimum quantities apply
- To specify an option, replace the "01" standard suffix with the suffix of the option.
- To specify multiple options, replace the "01" suffix with the desired suffixes in the numerical order shown below. NOTE: Not all suffixes can be combined together.

(SUFFIX)	OPTION	SIZES
-01	Standard Configuration	All
-14-	Vented Ball	All
-24-	Graphite Packing (Fire Safe "By Design")	All
-27-	Latch Lock Handle	1/4" to 2"
-35-	PTFE Seats	All
-49-	No Lubrication. Assembled Dry.	All
-57-	Oxygen Cleaned	All

STANDARD MATERIAL LIST

	PART	MATERIAL
1	Stem packing	MPTFE
2	Stem bearing	PEEK/PTFE
3	Ball	ASTM A276/A479 Alloy 2205
4	Seat (2)	MPTFE
5	Retainer	ASTM A276/A479 Alloy 2205 (1/4" to 1") ASTM A995 4A (1-1/4" to 3")
6	Gland	ASTM A276-316
7	Stem	ASTM A276/A479 Alloy 2205
8	Jam nut	SS
9	Body seal	PTFE (1-1/4" to 3")
10	Body	ASTM A995 4A

Pressure/Temperature Ratings -
Page M-29, Graph No. 43 (1/4" to 1")
Page M-30, Graph No. 44 (1-1/4" to 2")
Page M-30, Graph No. 45 (2-1/2" to 3")

DIMENSIONS

PART NO.	SIZE	A	B	C	D	E	F	G	H	I	J (FLATS)	K (THRDS) UNF	WT.
76J-AR1-64	1/4"	0.37	1.02	2.04	1.40	0.59	1.17	0.28	0.61	0.25	.247/.249	3/8-24	0.52
76J-AR2-64	3/8"	0.37	1.02	2.04	1.40	0.59	1.17	0.28	0.61	0.25	.247/.249	3/8-24	0.48
76J-AR3-64	1/2"	0.50	1.12	2.23	1.54	0.59	1.17	0.28	0.61	0.22	.247/.249	3/8-24	0.58
76J-AR4-64	3/4"	0.68	1.47	2.96	2.16	0.70	1.39	0.28	0.84	0.33	.247/.249	3/8-24	1.26
76J-AR5-64	1"	0.87	1.66	3.34	2.28	0.70	1.39	0.28	0.84	0.32	.247/.249	3/8-24	1.62
76J-AR6-64	1-1/4"	1.00	2.00	4.00	2.98	0.98	1.95	0.34	1.21	0.43	.370/.372	5/8-18	3.22
76J-AR7-64	1-1/2"	1.25	2.18	4.34	3.16	0.98	1.95	0.34	1.16	0.38	.370/.372	5/8-18	4.06
76J-AR8-64	2"	1.50	2.75	5.43	3.37	0.98	1.95	0.34	1.16	0.47	.370/.372	5/8-18	6.18
76J-AR9-64	2-1/2"	2.00	3.12	6.25	3.85	0.98	1.95	0.34	1.16	0.41	.370/.372	5/8-18	12.96
76J-AR0-64	3"	2.50	3.37	6.75	4.18	0.98	1.95	0.34	1.16	0.55	.370/.372	5/8-18	17.06

aalberts integrated piping systems

76K-100-A SERIES

SUPER DUPLEX STAINLESS STEEL BALL VALVE W/ MOUNTING PAD
1/4" - 1"

5 YEAR WARRANTY MADE IN USA

Female NPT Thread, 2000 CWP (psig). Cold Non-Shock. (See referenced P/T chart)
150 psig Saturated Steam.
Vacuum Service to 29 inches Hg.
MSS SP-110 Compliant.

FEATURES

- Investment cast components
- Reinforced seats
- Mounting pad for easy actuator mounting
- Blowout-proof stem design
- Fire safe "by design" (requires -24 suffix)
- Adjustable packing gland
- Stainless steel lever and nut

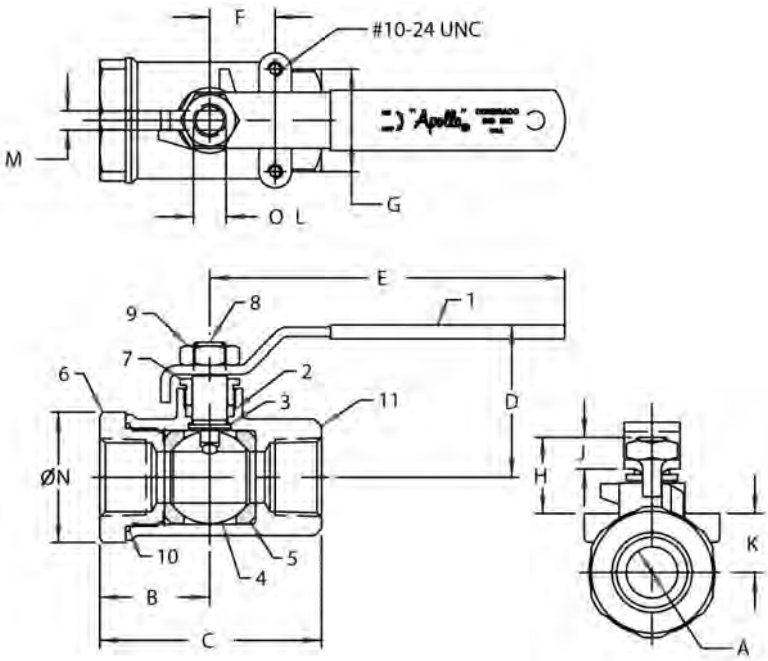

STANDARD MATERIAL LIST

	PART	MATERIAL
1	Lever and grip	304 SS w/vinyl
2	Stem packing	MPTFE
3	Stem bearing	RPTFE
4	Ball	ASTM A276/A479 Alloy 2507
5	Seat (2)	RPTFE
6	Retainer	ASTM A995 6A
7	Gland nut	A276-316
8	Stem	ASTM A276/A479 Alloy 2507
9	Lever nut	18-8 SS
10	Body seal	PTFE
11	Body	ASTM A995 6A

OPTIONS AVAILABLE

(MORE INFORMATION IN SECTION J)

- Minimum quantities apply
- To specify an option, replace the "01" standard suffix with the suffix of the option.
- To specify multiple options, replace the "01" suffix with the desired suffixes in the numerical order shown below. NOTE: Not all suffixes can be combined together.

(SUFFIX)	OPTION	SIZES
-01	Standard Configuration	All
-P -01-	BSPP (Parallel) Thread Connection	All
-T -01-	BSPT (Tapered) Thread Connection	All
-02-	Stem Grounded	All
-04-	2-1/4" Stem Extension (Carbon Steel, Zinc Plated)	All
-07-	Steel Tee Handle	All
-08-	90º Reversed Stem	All
-14-	Side Vented Ball (Uni-Directional)	All
-15-	Wheel Handle, Steel	All
-16-	Chain Lever - Vertical	3/4" to 1"
-19-	Lock Plate	All
-21-	UHMWPE Trim (Non-PTFE)	All
-24-	Graphite Packing (Fire Safe "By Design")	All
-27-	SS Latch-Lock Lever & Nut	All
-30-	Cam-Lock and Grounded	All
-32-	SS Tee Handle & Nut	All
-35-	PTFE Trim	All
-39-	SS Hi-Rise Locking Wheel Handle, SS Nut	All
-40-	Cyl-Loc and Grounded	All
-44-	Seal Welded	All
-45-	Less Lever & Nut	All
-46-	Latch Lock Lever - Lock in Closed Position Only	All
-47-	SS Latch Lock Oval Handle	All
-48-	SS Oval Handle (No Latch) & Nut	All
-49-	No Lubrication. Assembled Dry.	All
-50-	2-1/4" CS Locking Stem Extension	All
-57-	Oxygen Cleaned	All
-58-	Chain Lever - Horizontal	3/4" to 1"
-60-	Static Grounded Ball & Stem	All
-64-	250# Steam Trim (MPTFE Seats & Packing)	All

Pressure/Temperature Ratings - Page M-29, Graph No. 43

DIMENSIONS

PART NO.	SIZE	A	B	C	D	E	F	G	H	J	K	L	M	N	WT.
76K-101-01A	1/4"	0.37	1.02	2.05	1.71	3.85	0.50	1.12	0.88	0.34	0.53	0.375	0.234	1.16	0.58
76K-102-01A	3/8"	0.37	1.02	2.05	1.71	3.85	0.50	1.12	0.88	0.34	0.53	0.375	0.234	1.16	0.55
76K-103-01A	1/2"	0.50	1.12	2.23	1.79	3.85	0.50	1.12	0.90	0.34	0.59	0.375	0.234	1.38	0.63
76K-104-01A	3/4"	0.68	1.47	2.96	2.03	4.75	0.87	1.37	1.02	0.42	0.78	0.437	0.256	1.75	1.30
76K-105-01A	1"	0.87	1.67	3.34	2.16	4.75	0.87	1.37	1.02	0.42	0.91	0.437	0.256	1.94	1.60

76K-100 SERIES

SUPER DUPLEX STAINLESS STEEL BALL VALVE W/ MOUNTING PAD
1-1/4" - 2"

5 YEAR WARRANTY MADE IN USA

Female NPT Thread, 1500 CWP (psig). Cold Non-Shock. (See referenced P/T chart)
150 psig Saturated Steam.
Vacuum Service to 29 inches Hg.
MSS SP-110 Compliant.

FEATURES

- Investment cast components
- Reinforced seats
- Mounting pad for easy actuator mounting
- Blowout-proof stem design
- Fire safe "by design" (requires -24 suffix)
- Adjustable packing gland
- Stainless steel lever and nut

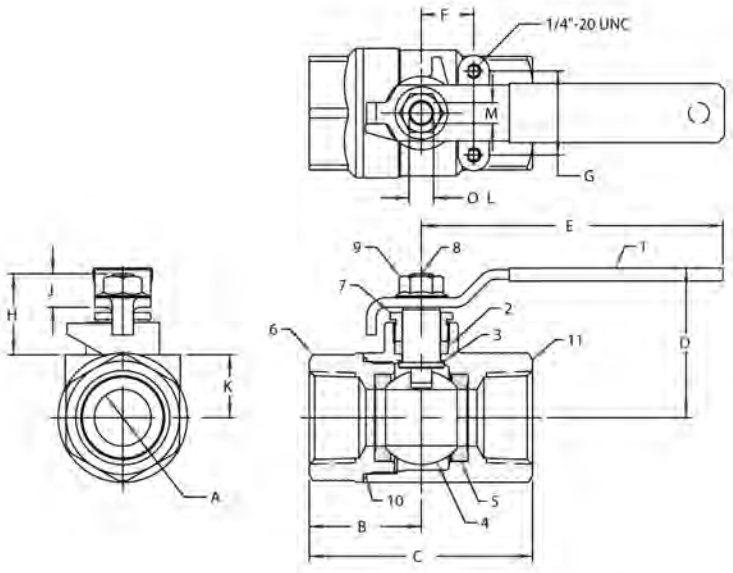

OPTIONS AVAILABLE

(MORE INFORMATION IN SECTION J)

- Minimum quantities apply
- To specify an option, replace the "01" standard suffix with the suffix of the option.
- To specify multiple options, replace the "01" suffix with the desired suffixes in the numerical order shown below. NOTE: Not all suffixes can be combined together.

(SUFFIX)	OPTION	SIZES
-01	Standard Configuration	All
-P -01-	BSPP (Parallel) Thread Connection	All
-T -01-	BSPT (Tapered) Thread Connection	All
-02-	Stem Grounded	All
-04-	2-1/4" Stem Extension (Carbon Steel, Zinc Plated)	All
-07-	Steel Tee Handle	All
-08-	90º Reversed Stem	All
-14-	Side Vented Ball (Uni-Directional)	All
-15-	Wheel Handle, Steel	All
-16-	Chain Lever - Vertical	1-1/4" to 2"
-19-	Lock Plate	All
-21-	UHMWPE Trim (Non-PTFE)	All
-24-	Graphite Packing (Fire Safe "By Design")	All
-27-	SS Latch-Lock Lever & Nut	All
-30-	Cam-Lock and Grounded	All
-32-	SS Tee Handle & Nut	All
-35-	PTFE Trim	All
-39-	SS Hi-Rise Locking Wheel Handle, SS Nut	All
-40-	Cyl-Loc and Grounded	All
-44-	Seal Welded	All
-45-	Less Lever & Nut	All
-46-	Latch Lock Lever - Lock in Closed Position Only	All
-47-	SS Latch Lock Oval Handle	All
-48-	SS Oval Handle (No Latch) & Nut	All
-49-	No Lubrication. Assembled Dry.	All
-50-	2-1/4" CS Locking Stem Extension	All
-57-	Oxygen Cleaned	All
-58-	Chain Lever - Horizontal	1-1/4" to 2"
-60-	Static Grounded Ball & Stem	All
-64-	250# Steam Trim (MPTFE Seats & Packing)	All

Pressure/Temperature Ratings - Page M-30, Graph No. 44

STANDARD MATERIAL LIST

	PART	MATERIAL
1	Lever and grip	304 SS w/vinyl
2	Stem packing	MPTFE
3	Stem bearing	RPTFE
4	Ball	ASTM A276/A479 Alloy 2507
5	Seat (2)	RPTFE
6	Retainer	ASTM A995 6A
7	Gland nut	A276-316 SS
8	Stem	ASTM A276/A479 Alloy 2507
9	Lever nut	18-8 SS
10	Body seal	PTFE
11	Body	ASTM A995 6A

DIMENSIONS

PART NO.	SIZE	A	B	C	D	E	F	G	H	J	K	L	M	WT.
76K-106-01	1-1/4"	1.00	2.00	4.00	2.68	5.40	0.94	1.50	1.50	0.60	1.12	0.625	0.377	3.10
76K-107-01	1-1/2"	1.25	2.17	4.34	3.25	7.75	0.94	1.50	1.50	0.60	1.28	0.625	0.377	4.20
76K-108-01	2"	1.50	2.69	5.43	3.24	7.75	0.94	1.50	1.46	0.60	1.50	0.625	0.377	6.10

aalberts integrated piping systems

76K-100 SERIES

SUPER DUPLEX STAINLESS STEEL BALL VALVE W/ MOUNTING PAD
2-1/2" - 3"

Female NPT Thread, 1000 CWP (psig). Cold Non-Shock. (See referenced P/T chart)
150 psig Saturated Steam.
Vacuum Service to 29 inches Hg.
MSS SP-110 Compliant.

FEATURES

- Investment cast components
- Reinforced seats
- Mounting pad for easy actuator mounting
- Blowout-proof stem design
- Fire safe "by design" (requires -24 suffix)
- Adjustable packing gland
- Stainless steel lever and nut

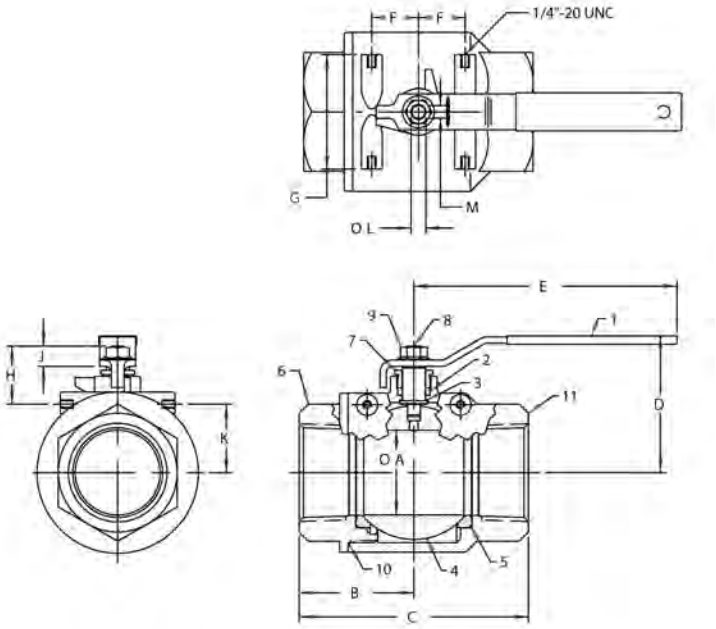

OPTIONS AVAILABLE

(MORE INFORMATION IN SECTION J)

- Minimum quantities apply
- To specify an option, replace the "01" standard suffix with the suffix of the option.
- To specify multiple options, replace the "01" suffix with the desired suffixes in the numerical order shown below. NOTE: Not all suffixes can be combined together.

(SUFFIX)	OPTION	SIZES
-01	Standard Configuration	All
-02-	Stem Grounded	All
-04-	2-1/4" Stem Extension (Carbon Steel, Zinc Plated)	All
-08-	90º Reversed Stem	All
-21-	UHMWPE Trim (Non-PTFE)	All
-24-	Graphite Packing (Fire Safe "By Design")	All
-27-	SS Latch-Lock Lever & Nut	All
-35-	PTFE Trim	All
-45-	Less Lever & Nut	All
-46-	Latch Lock Lever - Lock in Closed Position Only	All
-49-	No Lubrication. Assembled Dry.	All
-50-	2-1/4" CS Locking Stem Extension	All
-57-	Oxygen Cleaned	All
-60-	Static Grounded Ball & Stem	All
-64-	250# Steam Trim (MPTFE Seats & Packing)	All

Pressure/Temperature Ratings - Page M-30, Graph No. 45

STANDARD MATERIAL LIST

	PART	MATERIAL
1	Lever and grip	304 SS w/vinyl
2	Stem packing	MPTFE
3	Stem bearing	RPTFE
4	Ball	ASTM A276/A479 Alloy 2507
5	Seat (2)	RPTFE
6	Retainer	ASTM A995 6A
7	Gland nut	A276-316 SS
8	Stem	ASTM A276/A479 Alloy 2507
9	Lever nut	18-8 SS
10	Body seal	PTFE
11	Body	ASTM A995 6A

DIMENSIONS

PART NO.	SIZE	A	B	C	D	E	F	G	H	J	K	L	M	WT.
76K-109-01	2-1/2"	2.50	3.38	6.75	4.03	7.75	1.38	3.37	1.71	0.60	2.00	0.625	0.377	15.60
76K-100-01	3"	2.50	3.38	6.75	4.03	7.75	1.38	3.37	1.71	0.60	2.00	0.625	0.377	16.50

76K-AR SERIES

SUPER DUPLEX STAINLESS STEEL STD. PORT BALL VALVE
W/ ACTUATOR READY ISO MOUNTING PAD

5 YEAR WARRANTY MADE IN USA

Female NPT Thread, 1/4"-1" 2000 CWP (psig), 1-1/4"-2" 1500 CWP (psig), 2-1/2"-3" 1000 CWP (psig). Cold Non-Shock.
250 psig Saturated Steam. (See referenced P/T chart)
Vacuum Service to 29 inches Hg.
MSS SP-110 Compliant.

FEATURES

- Multi-piece packing set
- ISO 5211 mounting pad
- Blowout-proof stem design
- Fire safe "by design" (requires -24 suffix)
- Adjustable packing gland
- Live loaded packing

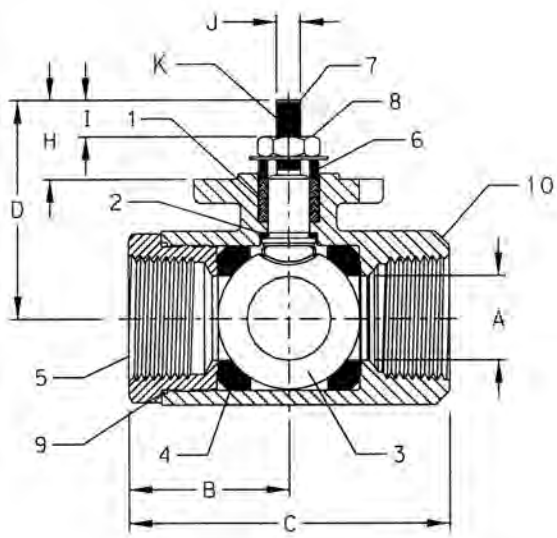

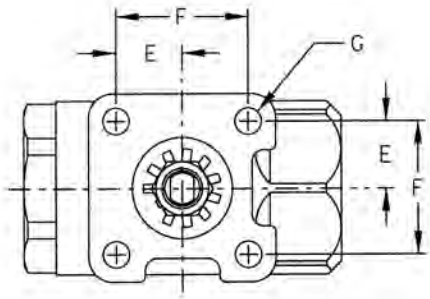

OPTIONS AVAILABLE

(MORE INFORMATION IN SECTION J)

- Minimum quantities apply
- To specify an option, replace the "01" standard suffix with the suffix of the option.
- To specify multiple options, replace the "01" suffix with the desired suffixes in the numerical order shown below. NOTE: Not all suffixes can be combined together.

(SUFFIX)	OPTION	SIZES
-01	Standard Configuration	All
-14-	Vented Ball	All
-24-	Graphite Packing (Fire Safe "By Design")	All
-27-	Latch Lock Handle	1/4" to 2"
-35-	PTFE Seats	All
-49-	No Lubrication. Assembled Dry.	All
-57-	Oxygen Cleaned	All

STANDARD MATERIAL LIST

	PART	MATERIAL
1	Stem packing	MPTFE
2	Stem bearing	PEEK/PTFE
3	Ball	ASTM A276/A479 Alloy 2507
4	Seat (2)	MPTFE
5	Retainer	ASTM A276/A479 Alloy 2507 (1/4" to 1") ASTM A995 6A (1-1/4" to 3")
6	Gland	A276-316
7	Stem	ASTM A276/A479 Alloy 2507
8	Jam nut	SS
9	Body seal	PTFE (1-1/4" to 3")
10	Body	ASTM A995 6A

Pressure/Temperature Ratings -
Page M-29, Graph No. 43 (1/4" to 1")
Page M-30, Graph No. 44 (1-1/4" to 2")
Page M-30, Graph No. 45 (2-1/2" to 3")

DIMENSIONS

PART NO.	SIZE	A	B	C	D	E	F	G	H	I	J (FLATS)	K (THREADS) UNF	WT.
76K-AR1-64	1/4"	0.37	1.02	2.04	1.40	0.59	1.17	0.28	0.61	0.25	.247/.249	3/8-24	0.52
76K-AR2-64	3/8"	0.37	1.02	2.04	1.40	0.59	1.17	0.28	0.61	0.25	.247/.249	3/8-24	0.48
76K-AR3-64	1/2"	0.50	1.12	2.23	1.54	0.59	1.17	0.28	0.61	0.22	.247/.249	3/8-24	0.58
76K-AR4-64	3/4"	0.68	1.47	2.96	2.16	0.70	1.39	0.28	0.84	0.33	.247/.249	3/8-24	1.26
76K-AR5-64	1"	0.87	1.66	3.34	2.28	0.70	1.39	0.28	0.84	0.32	.247/.249	3/8-24	1.62
76K-AR6-64	1-1/4"	1.00	2.00	4.00	2.98	0.98	1.95	0.34	1.21	0.43	.370/.372	5/8-18	3.22
76K-AR7-64	1-1/2"	1.25	2.18	4.34	3.16	0.98	1.95	0.34	1.16	0.38	.370/.372	5/8-18	4.06
76K-AR8-64	2"	1.50	2.75	5.43	3.37	0.98	1.95	0.34	1.16	0.47	.370/.372	5/8-18	6.18
76K-AR9-64	2-1/2"	2.00	3.12	6.25	3.85	0.98	1.95	0.34	1.16	0.41	.370/.372	5/8-18	12.96
76K-AR0-64	3"	2.50	3.37	6.75	4.18	0.98	1.95	0.34	1.16	0.55	.370/.372	5/8-18	17.06

aalberts integrated piping systems

77-100 SERIES

BRONZE FULL PORT BALL VALVE

Female NPT Thread, 600 CWP (psig), Cold Non-Shock. (See referenced P/T chart)
150 psig Saturated Steam.
Vacuum Service to 29 inches Hg.
MSS SP-110 Compliant.

FEATURES

- Two-piece body
- Reinforced seats
- Mounting pad for easy actuator mounting
- Blowout-proof stem design
- Adjustable packing gland
- Full port for full flow & min. pressure drop

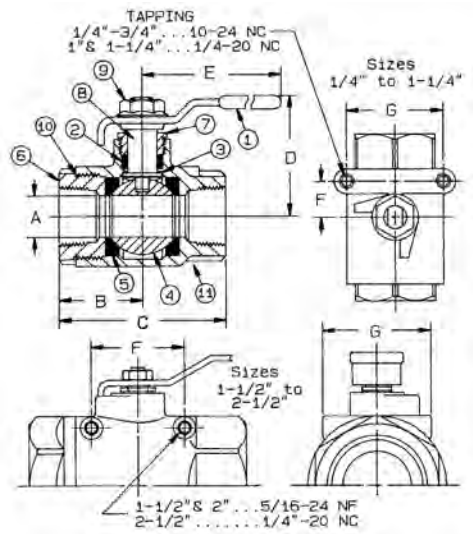

STANDARD MATERIAL LIST

	PART	MATERIAL
1	Lever and grip	Steel, zinc plated w/vinyl
2	Stem packing	MPTFE
3	Stem bearing	RPTFE
4	Ball	B16 Brass, chrome plated
5	Seat (2)	RPTFE
6	Retainer	B16 Brass (1/4" to 1") B584-C84400 (1-1/4" to 2-1/2")
7	Gland nut	B16 Brass
8	Stem	B16 Brass
9	Lever nut	Steel, zinc plated
10	Body seal	PTFE (1-1/4" to 2-1/2")
11	Body	B584-C84400

Pressure/Temperature Ratings - Page M-10, Graph No. 4

DIMENSIONS

PART NO.	SIZE	A	B	C	D	E	F	G	WT.
77-101-01	1/4"	0.50	1.09	2.18	1.77	3.87	0.50	1.12	0.79
77-102-01	3/8"	0.50	1.09	2.18	1.77	3.87	0.50	1.12	0.75
77-103-01	1/2"	0.50	1.09	2.18	1.77	3.87	0.50	1.12	0.69
77-104-01	3/4"	0.81	1.56	3.12	2.17	4.87	0.87	1.37	1.83
77-105-01	1"	1.00	1.81	3.62	2.68	5.50	0.93	1.50	3.32
77-106-01	1-1/4"	1.25	2.12	4.25	2.90	5.50	0.93	1.50	5.05
77-107-01	1-1/2"	1.50	2.37	4.75	3.10	8.00	2.08	3.06	6.71
77-108-01	2"	2.00	2.65	5.37	3.50	8.00	2.41	3.52	11.75
77-109-01	2-1/2"	2.50	3.25	6.50	4.06	8.00	2.75	3.37	17.25

VARIATIONS AVAILABLE

- 77-140 Series (316 SS Ball & Stem
- 77-190 Series (Locked Retainer)

OPTIONS AVAILABLE

(MORE INFORMATION IN SECTION J)

- Minimum quantities apply
- To specify an option, replace the "01" standard suffix with the suffix of the option.
- To specify multiple options, replace the "01" suffix with the desired suffixes in the numerical order shown below. NOTE: Not all suffixes can be combined together.

(SUFFIX)	OPTION	SIZES
-01	Standard Configuration	All
-P -01-	BSPP (Parallel) Thread Connection	All
-T -01-	BSPT (Tapered) Thread Connection	All
-02-	Stem Grounded	All
-04-	2-1/4" Stem Extension (Carbon Steel, Zinc Plated)	All
-05-	Plain Ball	All
-07-	Steel Tee Handle	1/4" to 1-1/4"
-08-	90º Reversed Stem	All
-10-	SS Lever & Nut	All
-11-	Therma-Seal™ Insulating Tee Handle	1/4" to 2"
-14-	Side Vented Ball (Uni-Directional)	All
-15-	Wheel Handle, Steel	1/4" to 1-1/4"
-16-	Chain Lever - Vertical	3/4" to 2-1/2"
-17-	Rough Chrome Plated - Bronze Valves	All
-18-	Plain Yellow Grip	All
-20-	Slot Vented Ball	All
-21-	UHMWPE Trim (Non-PTFE)	All
-24-	Graphite Packing	All
-27-	SS Latch-Lock Lever & Nut	All
-28-	Mounting Pad Not Drilled & Tapped	All
-30-	Cam-Lock and Grounded	1/4" to 1-1/4"
-32-	SS Tee Handle & Nut	1/4" to 1-1/4"
-35-	PTFE Trim	All
-36-	SS High-Rise Round Handle & Nut	1/4" to 1-1/4"
-39-	SS Hi-Rise, Locking Wheel Handle, SS Nut	3/4" to 1"
-40-	Cyl-Loc and Grounded	1/4" to 1-1/4"
-45-	Less Lever & Nut	All
-46-	Latch Lock Lever - Lock in Closed Position Only	All
-47-	SS Oval Latch-Lock Handle & Nut	1/4" to 3/4"
-48-	SS Oval Handle (No Latch) & Nut	1/4" to 2"
-49-	No Lubrication. Assembled Dry.	All
-50-	2-1/4" CS Locking Stem Extension	All
-56-	Multifill Seats & Packing	All
-57-	Oxygen Cleaned	All
-58-	Chain Lever - Horizontal	3/4" to 2-1/2"
-60-	Static Grounded Ball & Stem	All
-63-	NPT x Solder/Socket Weld	All
-64-	250# Steam Trim (MPTFE Seats & Packing) Use with 316 SS Ball & Stem Variation	All
-92-	Balancing Stop	All
-94-	2-1/4" Stem Extension, Balancing Stop	All
-SV-	Safety Vent (H-12)	1/4" to 2"

REV. 29JUN16

77-200 SERIES

BRONZE FULL PORT SOLDER END BALL VALVE

Solder End, 600 CWP (psig), Cold Non-Shock. (See referenced P/T chart)
150 psig Saturated Steam.
Vacuum Service to 29 inches Hg.
MSS SP-110 Compliant.

FEATURES

- Two-piece body
- Reinforced seats
- Full port for full flow & min. pressure drop
- Blowout-proof stem design
- Adjustable packing gland

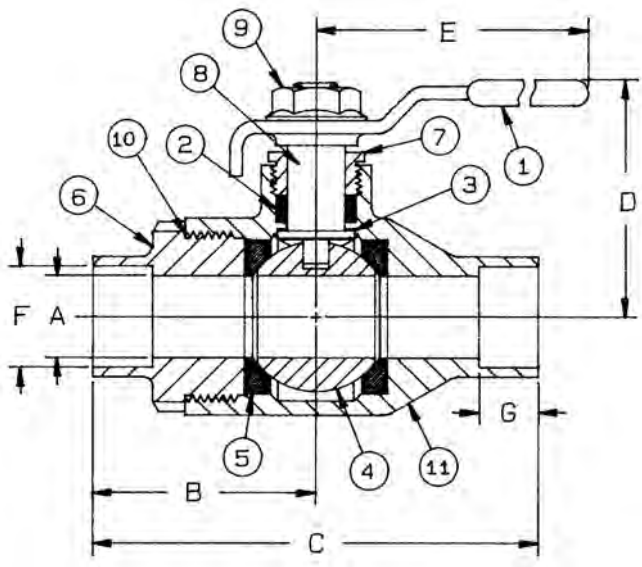

STANDARD MATERIAL LIST

	PART	MATERIAL
1	Lever and grip	Steel, zinc plated w/vinyl
2	Stem packing	MPTFE
3	Stem bearing	RPTFE
4	Ball	B16 Brass chrome plated
5	Seat (2)	RPTFE
6	Retainer	B16 Brass (3/4" to 1") B584-C84400 (1-1/4" to 2-1/2")
7	Gland nut	B16 Brass
8	Stem	B16 Brass
9	Lever nut	Steel, zinc plated
10	Body seal (1-1/4" to 2-1/2")	PTFE
11	Body	B584-C84400

The 77-200 is designed to be soft soldered into lines without disassembly. This allows a tested valve to be installed without disturbing the seats and seals in any way. Soldering temperature not to exceed 500ºF.

DIMENSIONS

PART NO.	SIZE	A	B	C	D	E	F	G	WT.
77-204-01	3/4"	0.81	2.28	4.28	2.12	4.87	.878	0.75	1.65
77-205-01	1"	1.00	2.72	4.64	2.62	5.50	1.129	0.90	2.99
77-206-01	1-1/4"	1.25	2.60	5.15	2.87	5.50	1.378	0.96	4.55
77-207-01	1-1/2"	1.50	3.00	6.00	3.34	8.00	1.629	1.09	6.04
77-208-01	2"	2.00	3.62	7.24	3.71	8.00	2.129	1.34	10.58
77-209-01	2-1/2"	2.50	3.93	7.87	4.12	8.00	2.630	1.48	15.53

VARIATIONS AVAILABLE:

- 77-240 Series (316 SS Ball & Stem)

OPTIONS AVAILABLE

(MORE INFORMATION IN SECTION J)

- Minimum quantities apply
- To specify an option, replace the "01" standard suffix with the suffix of the option.
- To specify multiple options, replace the "01" suffix with the desired suffixes in the numerical order shown below. NOTE: Not all suffixes can be combined together.

(SUFFIX)	OPTION	SIZES
-01	Standard Configuration	All
-02-	Stem Grounded	All
-04-	2-1/4" Stem Extension (Carbon Steel, Zinc Plated)	All
-05-	Plain Ball	All
-07-	Steel Tee Handle	3/4" to 1-1/4"
-08-	90º Reversed Stem	All
-10-	SS Lever & Nut	All
-11-	Therma-Seal™ Insulating Tee Handle	3/4" to 2"
-14-	Side Vented Ball (Uni-Directional)	All
-15-	Wheel Handle, Steel	3/4" to 1-1/4"
-16-	Chain Lever - Vertical	All
-17-	Rough Chrome Plated - Bronze Valves	All
-20-	Slot Vented Ball	All
-24-	Graphite Packing	All
-27-	SS Latch-Lock Lever & Nut	All
-30-	Cam-Lock and Grounded	3/4" to 1-1/4"
-32-	SS Tee Handle & Nut	3/4" to 1-1/4"
-35-	PTFE Trim	All
-40-	Cyl-Loc and Grounded	3/4" to 1-1/4"
-45-	Less Lever & Nut	All
-46-	Latch Lock Lever - Lock in Closed Position Only	All
-47-	SS Oval Latch-Lock Handle & Nut	3/4"
-48-	SS Oval Handle (No Latch) & Nut	All
-49-	No Lubrication. Assembled Dry.	All
-50-	2-1/4" CS Locking Stem Extension	All
-56-	Multifill Seats & Packing	All
-57-	Oxygen Cleaned	All
-58-	Chain Lever - Horizontal	All
-60-	Static Grounded Ball & Stem	All
-63-	NPT x Solder/Socket Weld	All
-92-	Balancing Stop	All
-94-	2-1/4" Stem Extension, Balancing Stop	All

Pressure/Temperature Ratings - Page M-10, Graph No. 4

77-900 SERIES

BRONZE FULL PORT SAE STRAIGHT THREAD BALL VALVE

5 YEAR WARRANTY MADE IN USA

SAE Straight Threads, 600 CWP (psig), Cold Non-Shock. (See referenced P/T chart)
150 psig Saturated Steam.
Vacuum Service to 29 inches Hg.
MSS SP-110 Compliant.

FEATURES

- Two-piece body
- Reinforced seats
- Mounting pad for easy actuator mounting
- Straight thread w/ O-Ring boss connection
- Blowout-proof stem design
- Adjustable packing gland
- Full port for full flow
- SAE J512/J514 Straight Thread O-Ring Boss

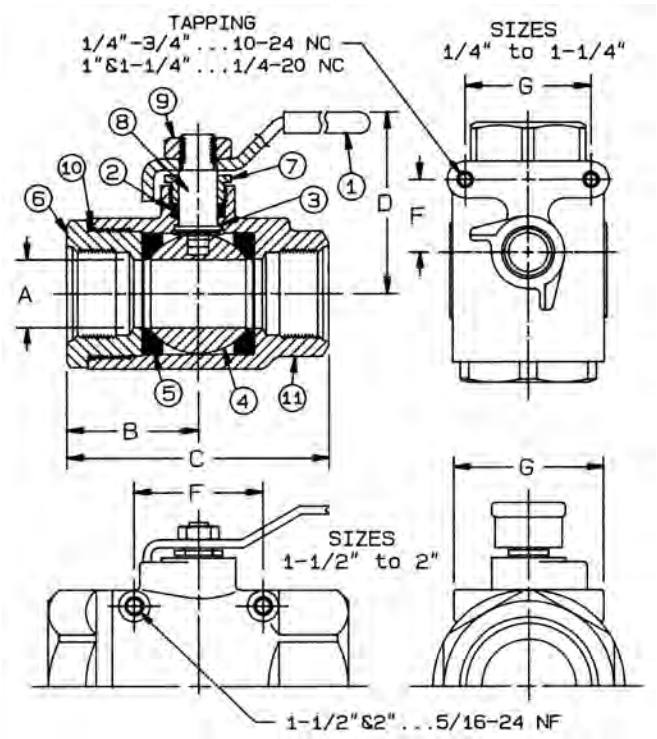

OPTIONS AVAILABLE

(MORE INFORMATION IN SECTION J)

- Minimum quantities apply
- To specify an option, replace the "01" standard suffix with the suffix of the option.
- To specify multiple options, replace the "01" suffix with the desired suffixes in the numerical order shown below. NOTE: Not all suffixes can be combined together.

(SUFFIX)	OPTION	SIZES
-01	Standard Configuration	All
-02-	Stem Grounded	All
-04-	2-1/4" Stem Extension (Carbon Steel, Zinc Plated)	All
-07-	Steel Tee Handle	All
-08-	90º Reversed Stem	All
-10-	SS Lever & Nut	All
-15-	Wheel Handle, Steel	All
-17-	Rough Chrome Plated - Bronze Valves	All
-24-	Graphite Packing	All
-27-	SS Latch-Lock Lever & Nut	All
-30-	Cam-Lock and Grounded	All
-32-	SS Tee Handle & Nut	All
-35-	PTFE Trim	All
-46-	Latch Lock Lever - Lock in Closed Position Only	All
-48-	SS Oval Handle (No Latch) & Nut	All
-50-	2-1/4" CS Locking Stem Extension	All
-51-	Oxygen Cleaned	All

Pressure/Temperature Ratings - Page M-10, Graph No. 4

STANDARD MATERIAL LIST

	PART	MATERIAL
1	Lever and grip	Steel, zinc plated w/vinyl
2	Stem packing	MPTFE
3	Stem bearing	RPTFE
4	Ball	Brass, chrome plated
5	Seat (2)	RPTFE
6	Retainer	B16 Brass (1/4" to 1") B584-C84400 (1-1/4" to 2")
7	Gland nut	B16 Brass
8	Stem	B16 Brass
9	Lever nut	Steel, zinc plated
10	Body seal	PTFE (1-1/4" to 2")
11	Body	B584-C84400

DIMENSIONS

PART NO.	NOM. TUBE OD	SIZE	A	B	C	D	E	F	G	WT.
77-901-01	1/4"	7/16"-20	0.43	1.12	2.25	1.81	3.87	0.50	1.12	0.79
77-902-01	3/8"	9/16"-18	0.50	1.12	2.25	1.81	3.87	0.50	1.12	0.75
77-903-01	1/2"	3/4"-16	0.50	1.12	2.25	1.81	3.87	0.50	1.12	0.69
77-904-01	3/4"	1-1/16"-12	0.81	1.56	3.12	2.12	4.87	0.87	1.37	1.83
77-905-01	1"	1-5/16"-12	1.00	1.81	3.62	2.62	5.50	0.93	1.50	3.32
77-906-01	1-1/4"	1-5/8"-12	1.25	2.12	4.25	2.87	5.50	0.93	1.50	5.05
77-907-01	1-1/2"	1-7/8"-12	1.50	2.37	4.75	3.34	8.00	2.09	3.06	6.71
77-908-01	2"	2-1/2"-12	2.00	2.65	5.37	3.71	8.00	2.41	3.52	11.75

77-AR SERIES

BRONZE FULL PORT BALL VALVE
W/ ACTUATOR READY ISO MOUNTING PAD

5 YEAR WARRANTY MADE IN USA

Female NPT Thread, 600 CWP (psig), Cold Non-Shock. (See referenced P/T chart).
250 psig Saturated Steam.
Vacuum Service to 29 inches Hg.
MSS SP-110 Compliant.

FEATURES

- Multi-piece packing set
- ISO 5211 mounting pad
- Stainless ball & stem
- Blowout-proof stem design
- Adjustable packing gland
- Live loaded packing

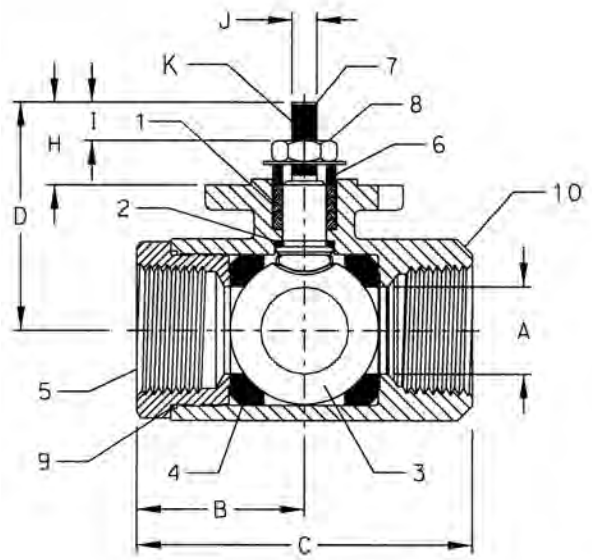

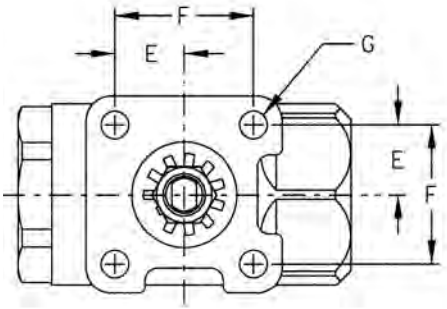

OPTIONS AVAILABLE

(MORE INFORMATION IN SECTION J)

- Minimum quantities apply
- To specify an option, replace the "01" standard suffix with the suffix of the option.
- To specify multiple options, replace the "01" suffix with the desired suffixes in the numerical order shown below. NOTE: Not all suffixes can be combined together.

(SUFFIX)	OPTION	SIZES
-64	Standard Configuration (Bare Stem)	All
-14-	Vented Ball	All
-24-	Graphite Packing	All
-27-	Latch Lock Handle	All
-35-	PTFE Seats	All
-49-	No Lubrication. Assembled Dry.	All
-57-	Oxygen Cleaned	All

Pressure/Temperature Ratings - Page M-10, Graph No. 4

STANDARD MATERIAL LIST

	PART	MATERIAL
1	Stem packing	MPTFE
2	Stem bearing	PEEK/PTFE
3	Ball	316 SS
4	Seat (2)	MPTFE
5	Retainer	B16 Brass (1/4" to 1") B584-C84400 (1-1/2" to 2")
6	Gland	B16 Brass
7	Stem	A276-316
8	Jam nut	SS
9	Body seal	PTFE (1-1/2" to 2")
10	Body	B584-C84400
11	Belleville washer(s)	Stainless Steel

DIMENSIONS

PART NO.	SIZE	A	B	C	D	E	F	G	H	I	J (FLATS)	K (THREADS) UNF	WT.
77-AR1-64	1/4"	0.37	1.02	2.18	1.40	0.61	1.17	0.28	0.61	0.23	.247/.249	3/8-24	0.60
77-AR2-64	3/8"	0.37	1.02	2.18	1.40	0.61	1.17	0.28	0.61	0.23	.247/.249	3/8-24	0.57
77-AR3-64	1/2"	0.50	1.12	2.20	1.54	0.61	1.17	0.28	0.61	0.21	.247/.249	3/8-24	0.62
77-AR4-64	3/4"	0.86	1.68	3.12	2.28	0.70	1.39	0.28	0.84	0.31	.247/.249	3/8-24	1.76
77-AR5-64	1"	1.00	1.81	3.62	2.87	0.98	1.95	0.34	1.06	0.40	.370/.372	5/8-18	3.44
77-AR7-64	1-1/2"	1.50	2.37	4.75	3.37	0.98	1.95	0.34	1.16	0.37	.370/.372	5/8-18	6.25
77-AR8-64	2"	2.00	2.69	5.38	3.86	0.98	1.95	0.34	1.16	0.37	.370/.372	5/8-18	11.72

REV. 20JAN17

aalberts integrated piping systems

77D-14x-01E SERIES

BRONZE FULL PORT DIRECT MOUNT BALL VALVE
W/ ACTUATOR READY ISO MOUNTING PAD

5 YEAR WARRANTY MADE IN USA

Female NPT Thread, 600 psig CWP, Cold Non-Shock
Vacuum Service to 29 inches Hg.
MSS SP-110 Compliant.

FEATURES

- Blowout-proof stem design
- Stainless steel ball & stem
- MPTFE seats & bearing
- Dual O-Ring stem seal
- Full port for full flow & min. pressure drop
- Direct actuator mounting per ISO 5211

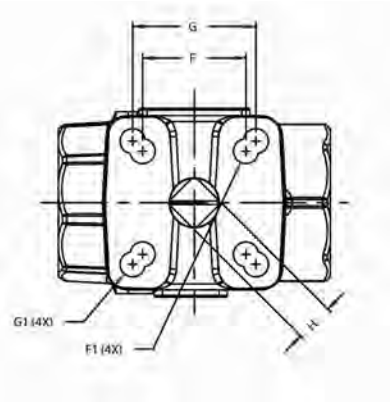

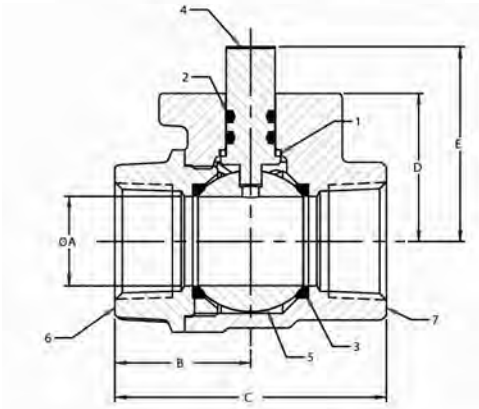

OPTIONS AVAILABLE

(MORE INFORMATION IN SECTION J)

- Minimum quantities apply
- To specify an option, replace the "01" standard suffix with the suffix of the option.
- To specify multiple options, replace the "01" suffix with the desired suffixes in the numerical order shown below. NOTE: Not all suffixes can be combined together.

(SUFFIX)	MATERIAL	SIZES	TEMP RANGE	STEAM (MAX)
-01E (STD)	EPDM o-ring	1/2" to 2"	-20° to 400°F	150 WSP @ 366°F
-01N	Nitrile o-ring	1/2" to 2"	-20° to 250°F	15 WSP @ 250°F
-01V	Viton o-ring	1/2" to 2"	-20° to 400°F	50 WSP @ 297°F

Pressure/Temperature Ratings - Page M-10, Graph No. 4

STANDARD MATERIAL LIST

	PART	MATERIAL
1	Stem bearing	MPTFE
2	O-ring (2)	EPDM
3	Seat (2)	MPTFE
4	Stem	A276-316
5	Ball	A276-316/A351-CF8M
6	Retainer	B16 Brass (1/2"-1") B584 C84400 (1-1/2"-2")
7	Body	B584 C84400

DIMENSIONS

PART NO.	SIZE	A	B	C	D	E	F (SQUARE)	ØF1	G (SQUARE)	ØG1	H (DIN SQ)
77D-143-01E	1/2"	0.50	1.15	2.25	1.00	1.37	0.997	0.224	1.167	0.281	0.275
77D-144-01E	3/4"	0.75	1.33	2.65	1.38	1.79	1.167	0.281	1.392	0.281	0.275
77D-145-01E	1"	1.00	1.54	3.07	1.67	2.20	1.167	0.281	1.392	0.281	0.430
77D-146-01E	1-1/4"	1.25	2.05	4.09	2.22	2.97	-	-	1.949	0.344	0.551
77D-147-01E	1-1/2"	1.50	2.12	4.23	2.31	3.05	N/A	N/A	1.949	0.344	0.551
77D-148-01E	2"	2.00	2.43	4.85	2.68	3.43	N/A	N/A	1.949	0.344	0.551

89-100-A SERIES

CARBON STEEL BALL VALVE
1/4" - 1"

Female NPT Thread, 2000 CWP (psig). Cold Non-Shock. (See referenced P/T chart)
150 psig Saturated Steam.
Vacuum Service to 29 inches Hg.
MSS SP-110 Compliant.

FEATURES

- Investment cast components
- Reinforced seats
- Mounting pad for easy actuator mounting
- Blowout-proof stem design
- Adjustable packing gland
- Zinc phosphate corrosion protection
- Fire safe to API 607 (requires -24 suffix)
- CSA CGA 3.16-M88 (Requires "GS" suffix)
- Meets NACE MR0175 (2000) & MR0103 (2003)

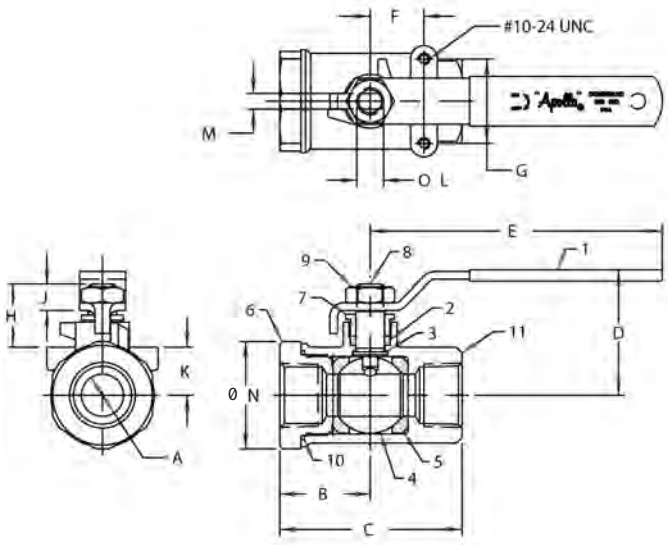

STANDARD MATERIAL LIST

	PART	MATERIAL
1	Lever and grip	Steel, zinc plated w/vinyl
2	Stem packing	MPTFE
3	Stem bearing	RPTFE
4	Ball	A108-CS chrome plated or A276-316 SS
5	Seat (2)	RPTFE
6	Retainer	A216-WCB Carbon Steel
7	Gland nut	A108 Carbon Steel
8	Stem	A108-CS or A276-316 SS
9	Lever nut	Steel, zinc plated
10	Body seal	PTFE
11	Body	A216-WCB Carbon Steel

VARIATIONS AVAILABLE

- 89-140 Series (316 SS Ball & Stem)

OPTIONS AVAILABLE

(MORE INFORMATION IN SECTION J)

- Minimum quantities apply
- To specify an option, replace the "01" standard suffix with the suffix of the option.
- To specify multiple options, replace the "01" suffix with the desired suffixes in the numerical order shown below. NOTE: Not all suffixes can be combined together.

(SUFFIX)	OPTION	SIZES
-01	Standard Configuration	All
-P -01-	BSPP (Parallel) Thread Connection	All
-T -01-	BSPT (Tapered) Thread Connection	All
-02-	Stem Grounded	All
-04-	2-1/4" Stem Extension (Carbon Steel, Zinc Plated)	All
-07-	Steel Tee Handle	All
-08-	90º Reversed Stem	All
-10-	SS Lever & Nut	All
-14-	Side Vented Ball (Uni-Directional)	All
-15-	Wheel Handle, Steel	All
-16-	Chain Lever - Vertical	3/4" to 1"
-18-	Plain Yellow Grip	All
-19-	Lock Plate	All
-24-	Graphite Packing, PTFE Body Seal, RPTFE Bearing (Fire Safe API 607, 5th Edition, ISO 10497-5:2004)	All
-27-	SS Latch-Lock Lever & Nut	All
-30-	Cam-Lock and Grounded	All
-32-	SS Tee Handle & Nut	All
-35-	PTFE Trim	All
-39-	SS Hi-Rise Locking Wheel Handle, SS Nut	All
-40-	Cyl-Loc and Grounded	All
-45-	Less Lever & Nut	All
-46-	Latch Lock Lever - Lock in Closed Position Only	All
-47-	SS Oval Latch-Lock Handle & Nut	All
-48-	SS Oval Handle (No Latch) & Nut	All
-49-	No Lubrication. Assembled Dry.	All
-50-	2-1/4" CS Locking Stem Extension	All
-56-	Multifill Seats & Packing	All
-58-	Chain Lever - Horizontal	3/4" to 1"
-60-	Static Grounded Ball & Stem	All
-64-	250# Steam Trim (MPTFE Seats & Packing) Use with 316 SS Ball & Stem Variation	All
-67-	Cleaned for Industrial Gases	All
-GS-	CSA CGA 3.16	All
-UA-	AIS (American Iron & Steel) Compliant	All

Pressure/Temperature Ratings - Page M-14, Graph No. 13

DIMENSIONS

PART NO.	SIZE	A	B	C	D	E	F	G	H	J	K	L	M	N	WT.
89-101-01A	1/4"	0.37	1.02	2.05	1.71	3.85	0.50	1.12	0.88	0.34	0.53	0.375	0.234	1.16	0.58
89-102-01A	3/8"	0.37	1.02	2.05	1.71	3.85	0.50	1.12	0.88	0.34	0.53	0.375	0.234	1.16	0.55
89-103-01A	1/2"	0.50	1.12	2.23	1.79	3.85	0.50	1.12	0.90	0.34	0.59	0.375	0.234	1.38	0.63
89-104-01A	3/4"	0.68	1.47	2.96	2.03	4.75	0.87	1.37	1.02	0.42	0.78	0.437	0.256	1.75	1.30
89-105-01A	1"	0.87	1.67	3.34	2.16	4.75	0.87	1.37	1.02	0.42	0.91	0.437	0.256	1.94	1.60

REV. 18JUL19

89-100 SERIES

CARBON STEEL BALL VALVE
1-1/4" - 2"

Female NPT Thread, 1500 CWP (psig). Cold Non-Shock. (See referenced P/T chart)
150 psig Saturated Steam.
Vacuum Service to 29 inches Hg.
MSS SP-110 Compliant.

FEATURES

- Investment cast components
- Reinforced seats
- Mounting pad for easy actuator mounting
- Blowout-proof stem design
- Adjustable packing gland
- Zinc phosphate corrosion protection
- Fire safe to API 607 (requires -24 suffix)
- CSA CGA 3.16-M88 (Requires "GS" suffix)
- Meets NACE MR0175 (2000) & MR0103 (2003)

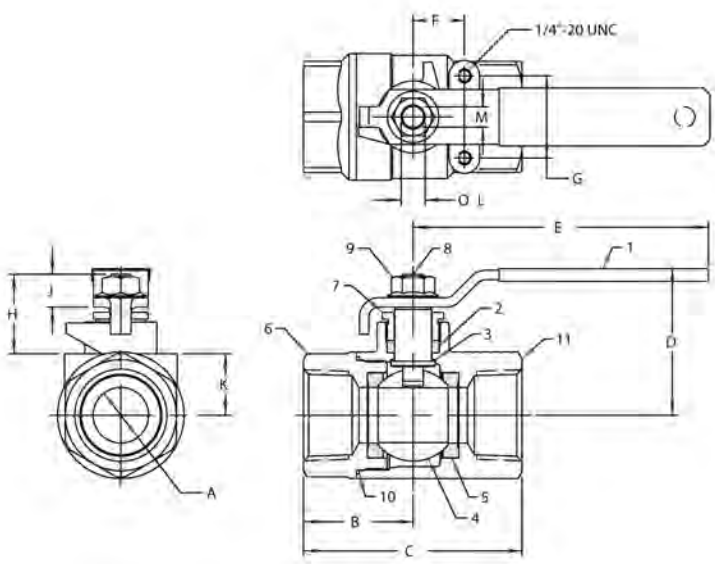

STANDARD MATERIAL LIST

	PART	MATERIAL
1	Lever and grip	Steel, zinc plated w/vinyl
2	Stem packing	MPTFE
3	Stem bearing	RPTFE
4	Ball	A108-CS chrome plated or A276-316 SS
5	Seat (2)	RPTFE
6	Retainer	A216-WCB Carbon Steel
7	Gland nut	A108 Carbon Steel
8	Stem	A108-CS or A276-316 SS
9	Lever nut	Steel, zinc plated
10	Body seal	PTFE
11	Body	A216-WCB Carbon Steel

VARIATIONS AVAILABLE

- 89-140 Series (316 SS Ball & Stem)

OPTIONS AVAILABLE

(MORE INFORMATION IN SECTION J)

- Minimum quantities apply
- To specify an option, replace the "01" standard suffix with the suffix of the option.
- To specify multiple options, replace the "01" suffix with the desired suffixes in the numerical order shown below. NOTE: Not all suffixes can be combined together.

(SUFFIX)	OPTION	SIZES
-01	Standard Configuration	All
-P -01-	BSPP (Parallel) Thread Connection	All
-T -01-	BSPT (Tapered) Thread Connection	All
-02-	Stem Grounded	All
-04-	2-1/4" Stem Extension (Carbon Steel, Zinc Plated)	All
-07-	Steel Tee Handle	All
-08-	90º Reversed Stem	All
-10-	SS Lever & Nut	All
-14-	Side Vented Ball (Uni-Directional)	All
-15-	Wheel Handle, Steel	All
-16-	Chain Lever - Vertical	All
-18-	Plain Yellow Grip	All
-19-	Lock Plate	All
-24-	Graphite Packing, PTFE Body Seal, RPTFE Bearing (Fire Safe API 607, 5th Edition, ISO 10497-5:2004)	All
-27-	SS Latch-Lock Lever & Nut	All
-30-	Cam-Lock and Grounded	All
-32-	SS Tee Handle & Nut	All
-35-	PTFE Trim	All
-39-	SS Hi-Rise Locking Wheel Handle, SS Nut	All
-40-	Cyl-Loc and Grounded	All
-45-	Less Lever & Nut	All
-46-	Latch Lock Lever - Lock in Closed Position Only	All
-48-	SS Oval Handle (No Latch) & Nut	All
-49-	No Lubrication. Assembled Dry.	All
-50-	2-1/4" CS Locking Stem Extension	All
-56-	Multifill Seats & Packing	All
-58-	Chain Lever - Horizontal	All
-60-	Static Grounded Ball & Stem	All
-64-	250# Steam Trim (MPTFE Seats & Packing) Use with 316 SS Ball & Stem Variation	All
-67-	Cleaned for Industrial Gases	All
-GS-	CSA CGA 3.16	All
-UA-	AIS (American Iron & Steel) Compliant	All

Pressure/Temperature Ratings - Page M-13, Graph No. 11

DIMENSIONS

PART NO.	SIZE	A	B	C	D	E	F	G	H	J	K	L	M	WT.
89-106-01	1-1/4"	1.00	2.00	4.00	2.68	5.40	0.94	1.50	1.50	0.60	1.12	0.625	0.377	3.10
89-107-01	1-1/2"	1.25	2.17	4.34	3.06	7.75	0.94	1.50	1.50	0.60	1.28	0.625	0.377	4.20
89-108-01	2"	1.50	2.69	5.43	3.26	7.75	0.94	1.50	1.46	0.60	1.50	0.625	0.377	6.10

89-100 SERIES

CARBON STEEL BALL VALVE
2-1/2" - 3"

Female NPT Thread, 1000 CWP (psig). Cold Non-Shock. (See referenced P/T chart)
150 psig Saturated Steam.
Vacuum Service to 29 inches Hg.
MSS SP-110 Compliant.

FEATURES

- Investment cast components
- Reinforced seats
- Mounting pad for easy actuator mounting
- Blowout-proof stem design
- Adjustable packing gland
- Zinc phosphate corrosion protection
- Fire safe to API 607 (requires -24 suffix)
- CSA CGA 3.16-M88 (Requires "GS" suffix)
- Meets NACE MR0175 (2000) & MR0103 (2003)

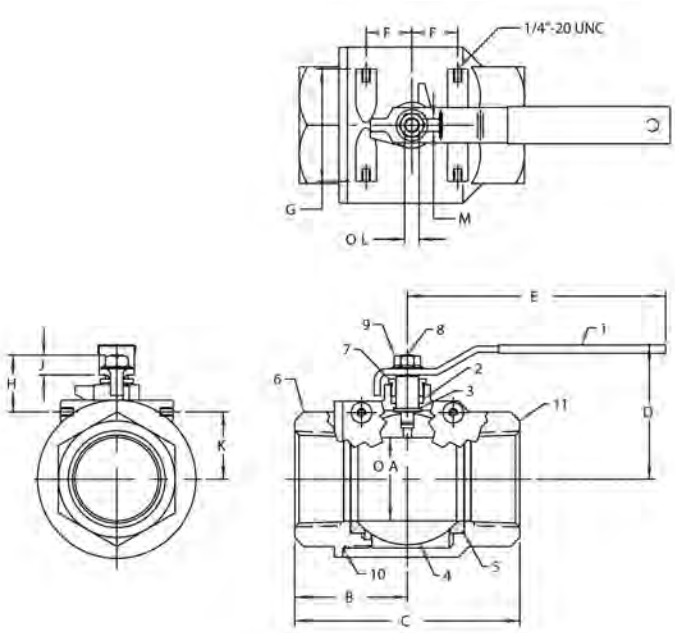

VARIATIONS AVAILABLE

- 89-140 Series (316 SS Ball & Stem)

OPTIONS AVAILABLE

(MORE INFORMATION IN SECTION J)

- Minimum quantities apply
- To specify an option, replace the "01" standard suffix with the suffix of the option.
- To specify multiple options, replace the "01" suffix with the desired suffixes in the numerical order shown below. NOTE: Not all suffixes can be combined together.

(SUFFIX)	OPTION	SIZES
-01	Standard Configuration	All
-02-	Stem Grounded	All
-04-	2-1/4" Stem Extension (Carbon Steel, Zinc Plated)	All
-08-	90º Reversed Stem	All
-10-	SS Lever & Nut	All
-14-	Side Vented Ball (Uni-Directional)	All
-18-	Plain Yellow Grip	All
-24-	Graphite Packing, PTFE Body Seal, RPTFE Bearing (Fire Safe API 607, 5th Edition, ISO 10497-5:2004)	All
-27-	SS Latch-Lock Lever & Nut	All
-35-	PTFE Trim	All
-45-	Less Lever & Nut	All
-46-	Latch Lock Lever - Lock in Closed Position Only	All
-49-	No Lubrication. Assembled Dry.	All
-50-	2-1/4" CS Locking Stem Extension	All
-56-	Multifill Seats & Packing	All
-60-	Static Grounded Ball & Stem	All
-64-	250# Steam Trim (MPTFE Seats & Packing) Use with 316 SS Ball & Stem Variation	All
-67-	Cleaned for Industrial Gases	All
-GS-	CSA CGA 3.16	All
-UA-	AIS (American Iron & Steel) Compliant	All

Pressure/Temperature Ratings - Page M-12, Graph No. 7

STANDARD MATERIAL LIST

	PART	MATERIAL
1	Lever and grip	Steel, zinc plated w/vinyl
2	Stem packing	MPTFE
3	Stem bearing	RPTFE
4	Ball	A108-CS chrome plated or A276-316 SS
5	Seat (2)	RPTFE
6	Retainer	A216-WCB Carbon Steel
7	Gland nut	A108-Carbon Steel
8	Stem	A108-Carbon Steel or A276-316 SS
9	Lever nut	Steel, zinc plated
10	Body seal	PTFE
11	Body	A216-WCB Carbon Steel

DIMENSIONS

PART NO.	SIZE	A	B	C	D	E	F	G	H	J	K	L	M	WT.
89-109-01	2-1/2"	2.50	3.38	6.75	4.03	7.75	1.38	3.37	1.71	0.60	2.00	0.625	0.377	15.60
89-100-01	3"	2.50	3.38	6.75	4.03	7.75	1.38	3.37	1.71	0.60	2.00	0.625	0.377	16.50

REV. 18JUL19

89-AR SERIES

CARBON STEEL STD. PORT BALL VALVE
W/ ACTUATOR READY ISO MOUNTING PAD

5 YEAR WARRANTY MADE IN USA

Female NPT Thread, 1/4"-1" 2000 CWP (psig), 1-1/4"-2" 1500 CWP (psig), 2-1/2"-3" 1000 CWP (psig). Cold Non-Shock.
250 psig Saturated Steam. (See referenced P/T chart)
Vacuum Service to 29 inches Hg.
MSS SP-110 Compliant.

FEATURES

- Multi-piece packing set
- Blowout-proof stem design
- ISO 5211 mounting pad
- Fire safe "by design" (requires -24 suffix)
- Adjustable packing gland
- Stainless steel ball & stem
- Live loaded packing

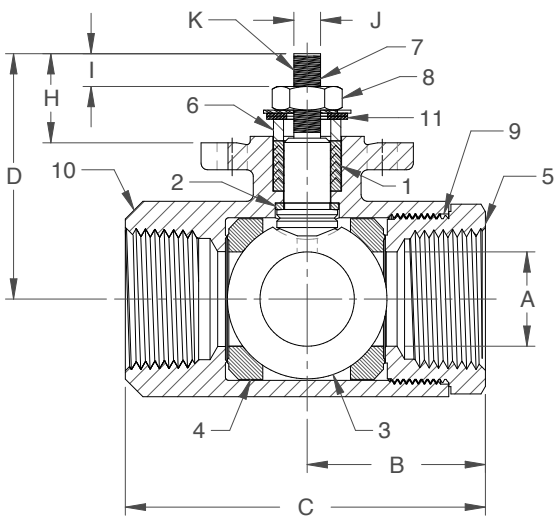

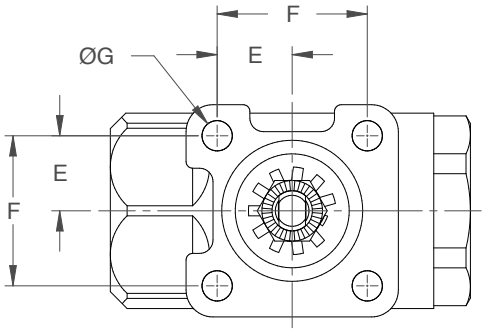

OPTIONS AVAILABLE

(MORE INFORMATION IN SECTION J)

- Minimum quantities apply
- To specify an option, replace the "01" standard suffix with the suffix of the option.
- To specify multiple options, replace the "01" suffix with the desired suffixes in the numerical order shown below. NOTE: Not all suffixes can be combined together.

(SUFFIX)	OPTION	SIZES
-01	Standard Configuration	All
-P -01-	BSPP (Parallel) Thread Connection	All
-T -01-	BSPT (Tapered) Thread Connection	All
-14-	Side Vented Ball (Uni-Directional)	All
-24-	Graphite Packing (Fire Safe "By Design")	All
-27-	Latch Lock Handle	1/4" to 2"
-35-	PTFE Seats	All
-49-	No Lubrication. Assembled Dry.	All
-64-	250# Steam Trim (MPTFE Seats & Packing) Use with 316 SS Ball & Stem Variation	All
-65-	Multifill Seats/Graphite Packing	All
-67-	Cleaned for Industrial Gases - CS Valves	All

Pressure/Temperature Ratings -
Page M-14 Graph No. 13 (1/4" to 1")
Page M-13, Graph No. 11 (1-1/4" to 2")
Page M-12, Graph No. 7 (2-1/2" to 3")

STANDARD MATERIAL LIST

	PART	MATERIAL
1	Stem packing	MPTFE
2	Stem bearing	PEEK/PTFE
3	Ball	316 SS
4	Seat (2)	MPTFE
5	Retainer	A108-CS (1/4" to 3")
6	Gland	A276-316
7	Stem	A276-316
8	Jam nut	SS
9	Body seal	PTFE (1-1/4" to 3")
10	Body	A216-WCB
11	Bellville Washer(s)	Stainless Steel

DIMENSIONS

PART NO.	SIZE	A	B	C	D	E	F	G	H	I	J (FLATS)	K (THREADS) UNF	WT.
89-AR1-64	1/4"	0.37	1.02	2.04	1.40	0.59	1.17	0.28	0.61	0.18	.247/.249	3/8-24	0.52
89-AR2-64	3/8"	0.37	1.02	2.04	1.40	0.59	1.17	0.28	0.61	0.18	.247/.249	3/8-24	0.49
89-AR3-64	1/2"	0.50	1.12	2.23	1.54	0.59	1.17	0.28	0.61	0.16	.247/.249	3/8-24	0.58
89-AR4-64	3/4"	0.68	1.47	2.96	2.16	0.70	1.39	0.28	0.84	0.37	.247/.249	3/8-24	1.26
89-AR5-64	1"	0.87	1.66	3.34	2.28	0.70	1.39	0.28	0.82	0.37	.247/.249	3/8-24	1.62
89-AR6-64	1-1/4"	1.00	2.00	4.00	2.92	0.98	1.95	0.34	1.16	0.37	.370/.372	5/8-18	3.22
89-AR7-64	1-1/2"	1.25	2.18	4.34	3.16	0.98	1.95	0.34	1.16	0.37	.370/.372	5/8-18	4.06
89-AR8-64	2"	1.50	2.75	5.43	3.32	0.98	1.95	0.34	1.16	0.37	.370/.372	5/8-18	6.18
89-AR9-64	2-1/2"	2.00	3.12	6.25	3.85	0.98	1.95	0.34	1.16	0.37	.370/.372	5/8-18	13.06
89-AR0-64	3"	2.50	3.37	6.75	4.18	0.98	1.95	0.34	1.16	0.37	.370/.372	5/8-18	17.06

399-100-A SERIES

ALLOY-20 BALL VALVE
1/4" - 1"

5 YEAR WARRANTY MADE IN USA

Female NPT Thread, 2000 CWP (psig). Cold Non-Shock. (See referenced P/T chart)
150 psig Saturated Steam.
Vacuum Service to 29 inches Hg.

FEATURES

- Investment cast components
- Reinforced seats
- Mounting pad for easy actuator mounting
- Fire safe "by design" (requires -24 suffix)
- Blowout-proof stem design
- Adjustable packing gland
- Meets NACE MR0175 (2000) & MR0103 (2003)

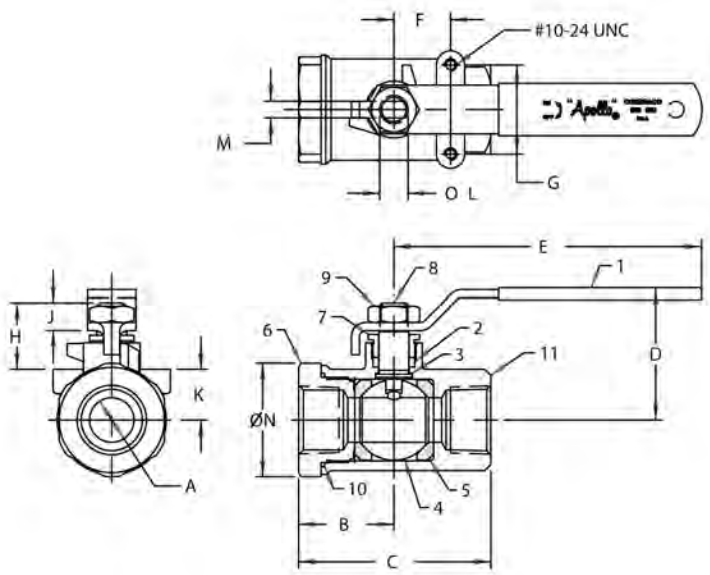

OPTIONS AVAILABLE

(MORE INFORMATION IN SECTION J)

- Minimum quantities apply
- To specify an option, replace the "01" standard suffix with the suffix of the option.
- To specify multiple options, replace the "01" suffix with the desired suffixes in the numerical order shown below. NOTE: Not all suffixes can be combined together.

(SUFFIX)	OPTION	SIZES
-01	Standard Configuration	All
-P -01-	BSPP (Parallel) Thread Connection	All
-T -01-	BSPT (Tapered) Thread Connection	All
-02-	Stem Grounded	All
-04-	2-1/4" Stem Extension (Carbon Steel, Zinc Plated)	All
-07-	Steel Tee Handle	All
-08-	90º Reversed Stem	All
-14-	Side Vented Ball (Uni-Directional)	All
-15-	Wheel Handle, Steel	All
-16-	Chain Lever - Vertical	3/4" to 1"
-18-	Plain Yellow Grip	All
-19-	Lock Plate	All
-21-	UHMWPE Trim (Non-PTFE)	All
-24-	Graphite Packing (Fire Safe "By Design")	All
-27-	SS Latch-Lock Lever & Nut	All
-28-	Mounting Pad Not Drilled & Tapped	All
-30-	Cam-Lock and Grounded	All
-32-	SS Tee Handle & Nut	All
-35-	PTFE Trim	All
-40-	Cyl-Loc and Grounded	All
-45-	Less Lever & Nut	All
-46-	Latch Lock Lever - Lock in Closed Position Only	All
-47-	SS Oval Latch-Lock Handle & Nut	All
-48-	SS Oval Handle (No Latch) & Nut	All
-49-	No Lubrication. Assembled Dry.	All
-50-	2-1/4" CS Locking Stem Extension	All
-56-	Multifill Seats & Packing	All
-57-	Oxygen Cleaned	All
-58-	Chain Lever - Horizontal	3/4" to 1"
-60-	Static Grounded Ball & Stem	All
-64-	250# Steam Trim (MPTFE Seats & Packing) Use with 316 SS Ball & Stem Variation	All

Pressure/Temperature Ratings - Page M-17, Graph No. 20

STANDARD MATERIAL LIST

	PART	MATERIAL
1	Lever and grip	304 SS w/vinyl
2	Stem packing	MPTFE
3	Stem bearing	RPTFE
4	Ball	B463-2OCB-3
5	Seat (2)	RPTFE
6	Retainer	A351-CN7M
7	Gland nut	316 SS
8	Stem	B473-N08020
9	Lever nut	304 SS
10	Body seal	PTFE
11	Body	A351-CN7M

DIMENSIONS

PART NO.	SIZE	A	B	C	D	E	F	G	H	J	K	L	M	N	WT.
399-101-01A	1/4"	0.37	1.02	2.05	1.71	3.85	0.50	1.12	0.88	0.34	0.53	0.375	0.234	1.16	0.58
399-102-01A	3/8"	0.37	1.02	2.05	1.71	3.85	0.50	1.12	0.88	0.34	0.53	0.375	0.234	1.16	0.55
399-103-01A	1/2"	0.50	1.12	2.23	1.79	3.85	0.50	1.12	0.90	0.34	0.59	0.375	0.234	1.38	0.63
399-104-01A	3/4"	0.75	1.47	2.96	2.03	4.75	0.87	1.37	1.02	0.42	0.78	0.437	0.256	1.75	1.30
399-105-01A	1"	1.00	1.67	3.34	2.16	4.75	0.87	1.37	1.02	0.42	0.91	0.437	0.256	1.94	1.60

aalberts integrated piping systems

399-100 SERIES

ALLOY-20 BALL VALVE
1-1/4" - 2"

Female NPT Thread, 1500 CWP (psig). Cold Non-Shock. (See referenced P/T chart)
150 psig Saturated Steam.
Vacuum Service to 29 inches Hg.

FEATURES

- Investment cast components
- Reinforced seats
- Mounting pad for easy actuator mounting
- Fire safe "by design" (requires -24 suffix)
- Blowout-proof stem design
- Adjustable packing gland
- Meets NACE MR0175 (2000) & MR0103 (2003)

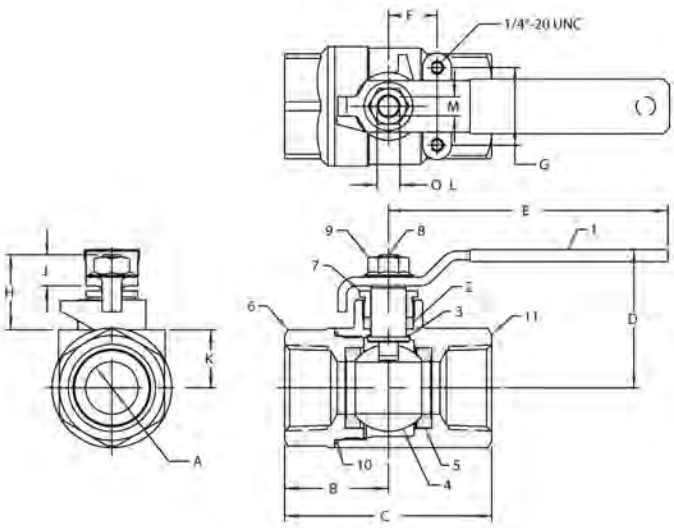

STANDARD MATERIAL LIST

	PART	MATERIAL
1	Lever and grip	304 SS w/vinyl
2	Stem packing	MPTFE
3	Stem bearing	RPTFE
4	Ball	B463-2OCB-3
5	Seat (2)	RPTFE
6	Retainer	A351-CN7M
7	Gland nut	316 SS
8	Stem	B473-N08020
9	Lever nut	304 SS
10	Body seal	PTFE
11	Body	A351-CN7M

OPTIONS AVAILABLE

(MORE INFORMATION IN SECTION J)

- Minimum quantities apply
- To specify an option, replace the "01" standard suffix with the suffix of the option.
- To specify multiple options, replace the "01" suffix with the desired suffixes in the numerical order shown below. NOTE: Not all suffixes can be combined together.

(SUFFIX)	OPTION	SIZES
-01	Standard Configuration	All
-P -01-	BSPP (Parallel) Thread Connection	All
-T -01-	BSPT (Tapered) Thread Connection	All
-02-	Stem Grounded	All
-04-	2-1/4" Stem Extension (Carbon Steel, Zinc Plated)	All
-07-	Steel Tee Handle	All
-08-	90º Reversed Stem	All
-14-	Side Vented Ball (Uni-Directional)	All
-15-	Wheel Handle, Steel	All
-16-	Chain Lever - Vertical	1-1/4" to 2"
-18-	Plain Yellow Grip	All
-19-	Lock Plate	All
-21-	UHMWPE Trim (Non-PTFE)	All
-24-	Graphite Packing (Fire Safe "By Design")	All
-27-	SS Latch-Lock Lever & Nut	All
-28-	Mounting Pad Not Drilled & Tapped	All
-30-	Cam-Lock and Grounded	All
-32-	SS Tee Handle & Nut	All
-35-	PTFE Trim	All
-40-	Cyl-Loc and Grounded	All
-45-	Less Lever & Nut	All
-46-	Latch Lock Lever - Lock in Closed Position Only	All
-48-	SS Oval Handle (No Latch) & Nut	All
-49-	No Lubrication. Assembled Dry.	All
-50-	2-1/4" CS Locking Stem Extension	All
-56-	Multifill Seats & Packing	All
-57-	Oxygen Cleaned	All
-58-	Chain Lever - Horizontal	1-1/4" to 2"
-60-	Static Grounded Ball & Stem	All
-64-	250# Steam Trim (MPTFE Seats & Packing) Use with 316 SS Ball & Stem Variation	All

Pressure/Temperature Ratings - Page M-17, Graph No. 19

DIMENSIONS

PART NO.	SIZE	A	B	C	D	E	F	G	H	J	K	L	M	WT.
399-106-01	1-1/4"	1.00	2.00	4.00	2.68	5.40	0.94	1.50	1.50	0.60	1.12	0.625	0.377	3.10
399-107-01	1-1/2"	1.25	2.17	4.34	3.08	7.75	0.94	1.50	1.50	0.60	1.28	0.625	0.377	4.20
399-108-01	2"	1.50	2.69	5.43	3.26	7.75	0.94	1.50	1.46	0.60	1.50	0.625	0.377	6.10

SECTION A

REVISIONS

PAGE	DATE	DESCRIPTION
A-2	20JAN17	Removed 1-1/4" 77-AR.
A-5	30JUN16	Updated options table.
A-11	18JUL19	Added "-UA" (AIS (American Iron & Steel) Compliant) suffix option
	24MAY17	Deleted 72 (barstock design) and replaced with 72-A (forged). Replaced page A-11 with former page A-11a.
A-11A	24MAY17	Moved page A-11a (forged 72-A) to page A-11.
	23FEB17	Edited all valve weights
	13JAN17	Added page for 72-1xx-xx-A. Added NACE compliance statement for 316 SS Ball & Stem
A-12	18JUL19	Added "-UA" (AIS (American Iron & Steel) Compliant) suffix option
	24MAY17	Deleted 72 (barstock design) and replaced with 72-A (forged). Replaced page A-12 with former page A-12a.
A-12A	24MAY17	Moved page A-12a (forged 72-A) to page A-12.
	23FEB17	Edited all valve weights
	13JAN17	Added page for 72-9xx-xx-A. Added NACE compliance statement for 316 SS Ball & Stem
A-13	18JUL19	Added "-UA" (AIS (American Iron & Steel) Compliant) suffix option
	22JAN18	Updated dimensions table
	12JUL16	Clarified NACE compliance statement.
A-14, A-15, A-16	18JUL19	Added "-UA" (AIS (American Iron & Steel) Compliant) suffix option
	11APR16	Changed CSA CGA 3.16 bullet to require "-GS-" suffix. Added "-GS-" suffix to options table.
A-18	18JUL19	Added "-UA" (AIS (American Iron & Steel) Compliant) suffix option
	14FEB18	Changed NSF 372 approval to 1/4" - 3"
	22JAN18	Added "-50-" suffix (2-1/4" CS locking stem extension)
	24MAY17	Added "-35" suffix (PTFE trim) option for 3" 76F. Changed 3" valve's standard seat to RTFM in materials list (exception: "-GS-" suffix).
	04MAY17	Changed "-27" suffix available sizes to 3/8" - 3".
	11APR16	Changed CSA CGA 3.16 bullet to require "-GS-" suffix. Added "-GS" suffix to options table.
A-19	24MAY17	Added "-35" suffix (PTFE trim) option for 3" 76F. Changed 3" valve's standard seat to RTFM in materials list.
A-20	24MAY17	Added "-35" suffix (PTFE trim) option for 3" 76F. Changed 3" valve's standard seat to RTFM in materials list.
A-29	22JUN16	Added "-39" suffix option
A-32	20JAN17	Clarified retainer and body seal note in material list.
A-34, A-35, A-36	18JUL19	Added "-UA" (AIS (American Iron & Steel) Compliant) suffix option
	11APR16	Changed CSA CGA 3.16 bullet to require "-GS-" suffix. Added "-GS" suffix to options table.

"Apollo" Valves | INDUSTRIAL PRODUCTS

3-Piece Ball Valves

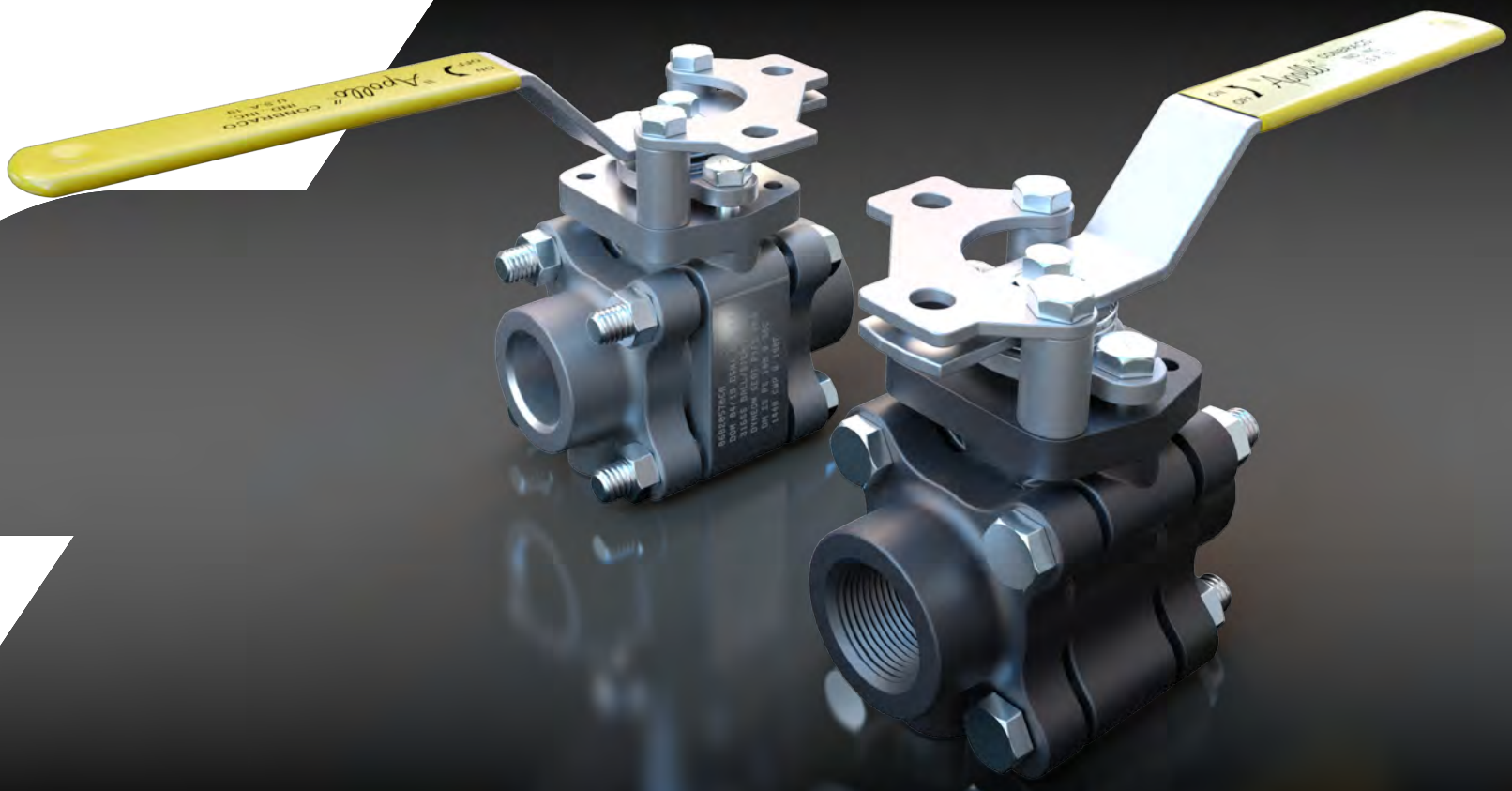

section B

SECTION B

3-PIECE BALL VALVES

SERIES	DESCRIPTION	PAGE
	BRONZE	
82-100/82A-140 SERIES	NPT Full Port Bronze	B-3
82LF-100/140 SERIES	Lead Free NPT Full Port Bronze	B-4
82-200/82A-240 SERIES	Solder Full Port Bronze	B-5
82LF-200/240 SERIES	Lead Free Solder Full Port Bronze	B-6
	CARBON STEEL	
83A-140 SERIES	NPT Full Port 1500 CWP Carbon Steel	B-7
83A-240 SERIES	Socket-Weld Full Port 1500 CWP Carbon Steel	B-8
83A-340 SERIES	Sch. 5 Butt-Weld Full Port 1500 CWP Carbon Steel	B-9
83A-440 SERIES	Sch. 10 Butt-Weld Full Port 1500 CWP Carbon Steel	B-10
83A-540 SERIES	Sch. 40 Butt-Weld Full Port 1500 CWP Carbon Steel	B-11
83A-640 SERIES	Sch. 80 Butt-Weld Full Port 1500 CWP Carbon Steel	B-12
83B-140 SERIES	NPT Full Port Class 600 Carbon Steel	B-13
83B-240 SERIES	Socket-Weld Full Port Class 600 Carbon Steel	B-14
83B-340 SERIES	Sch. 5 Butt-Weld Full Port Class 600 Carbon Steel	B-15
83B-440 SERIES	Sch. 10 Butt-Weld Full Port Class 600 Carbon Steel	B-16
83B-540 SERIES	Sch. 40 Butt-Weld Full Port Class 600 Carbon Steel	B-17
83B-640 SERIES	Sch. 80 Butt-Weld Full Port Class 600 Carbon Steel	B-18
83L-140 SERIES	NPT Full Port Class 600, Low Temperature Carbon Steel	B-19
83L-240 SERIES	Socket-Weld Full Port Class 600, Low Temperature Carbon Steel	B-20
83L-340 SERIES	Sch. 5 Butt-Weld Full Port Class 600, Low Temperature Carbon Steel	B-21
83L-440 SERIES	Sch. 10 Butt-Weld Full Port Class 600, Low Temperature Carbon Steel	B-22
83L-540 SERIES	Sch. 40 Butt-Weld Full Port Class 600, Low Temperature Carbon Steel	B-23
83L-640 SERIES	Sch. 80 Butt-Weld Full Port Class 600, Low Temperature Carbon Steel	B-24
83R-140 SERIES	Actuator Ready NPT Full Port Carbon Steel (1-1/2", 2" & 3" only)	B-63-64
83R-240 SERIES	Actuator Ready Socket-Weld Full Port CS (1-1/2", 2" & 3" only)	B-65-66
83R-740 SERIES	Actuator Ready Butt-Weld Full Port Carbon Steel (1-1/2", 2" only)	B-67
	STAINLESS STEEL	
86A-100 SERIES	NPT Full Port 1500 CWP Stainless Steel	B-25
86A-200 SERIES	Socket-Weld Full Port 1500 CWP Stainless Steel	B-26
86A-300 SERIES	Sch. 5 Butt-Weld Full Port 1500 CWP Stainless Steel	B-27
86A-400 SERIES	Sch. 10 Butt-Weld Full Port 1500 CWP Stainless Steel	B-28
86A-500 SERIES	Sch. 40 Butt-Weld Full Port 1500 CWP Stainless Steel	B-29
86A-600 SERIES	Sch. 80 Butt-Weld Full Port 1500 CWP Stainless Steel	B-30
86B-100 SERIES	NPT Full Port Class 600 Stainless Steel	B-31
86B-200 SERIES	Socket-Weld Full Port Class 600 Stainless Steel	B-32
86B-300 SERIES	Sch. 5 Butt-Weld Full Port Class 600 Stainless Steel	B-33
86B-400 SERIES	Sch. 10 Butt-Weld Full Port Class 600 Stainless Steel	B-34
86B-500 SERIES	Sch. 40 Butt-Weld Full Port Class 600 Stainless Steel	B-35
86B-600 SERIES	Sch. 80 Butt-Weld Full Port Class 600 Stainless Steel	B-36
86G-100 SERIES	NPT Full Port Class 600 316L Stainless Steel	B-45
86G-200 SERIES	Socket-Weld Full Port Class 600 316L Stainless Steel	B-46
86G-300 SERIES	Sch. 5 Butt-Weld Full Port Class 600 316L Stainless Steel	B-47
86G-400 SERIES	Sch. 10 Butt-Weld Full Port Class 600 316L Stainless Steel	B-48
86G-500 SERIES	Sch. 40 Butt-Weld Full Port Class 600 316L Stainless Steel	B-49
86G-600 SERIES	Sch. 80 Butt-Weld Full Port Class 600 316L Stainless Steel	B-50
86R-100 SERIES	Actuator Ready NPT Full Port Stainless Steel (1-1/2", 2" & 3" only)	B-68-69
86R-200 SERIES	Actuator Ready Socket-Weld Full Port SS (1-1/2", 2" & 3" only)	B-70-71
86R-700 SERIES	Actuator Ready Butt-Weld Full Port Stainless Steel (1-1/2", 2" only)	B-72
85S-100 SERIES	NPT Full Port Class 600 Stainless Steel	B-73
85S-200 SERIES	Socket-Weld Full Port Class 600 Stainless Steel	B-74
85S-500 SERIES	Sch. 40 Butt-Weld Full Port Class 600 Stainless Steel	B-75

SECTION B

3-PIECE BALL VALVES

SERIES	DESCRIPTION	PAGE
ALLOY 20		
86C-100 SERIES	NPT Full Port Class 600 Alloy 20	B-37
86C-200 SERIES	Socket-Weld Full Port Class 600 Alloy 20	B-38
86C-300 SERIES	Sch. 5 Butt-Weld Full Port Class 600 Alloy 20	B-39
86C-400 SERIES	Sch. 10 Butt-Weld Full Port Class 600 Alloy 20	B-40
86C-500 SERIES	Sch. 40 Butt-Weld Full Port Class 600 Alloy 20	B-41
86C-600 SERIES	Sch. 80 Butt-Weld Full Port Class 600 Alloy 20	B-42
HASTELLOY® C		
86D-100 SERIES	NPT Full Port Class 600 Hastelloy® C	B-43
86D-200 SERIES	Socket-Weld Full Port Class 600 Hastelloy® C	B-44
DUPLEX STAINLESS STEEL		
86J-100 SERIES	NPT Full Port Class 600 Duplex Stainless Steel	B-51
86J-200 SERIES	Socket-Weld Full Port Class 600 Duplex Stainless Steel	B-52
86J-300 SERIES	Sch. 5 Butt-Weld Full Port Class 600 Duplex Stainless Steel	B-53
86J-400 SERIES	Sch. 10 Butt-Weld Full Port Class 600 Duplex Stainless Steel	B-54
86J-500 SERIES	Sch. 40 Butt-Weld Full Port Class 600 Duplex Stainless Steel	B-55
86J-600 SERIES	Sch. 80 Butt-Weld Full Port Class 600 Duplex Stainless Steel	B-56
SUPER DUPLEX STAINLESS STEEL		
86K-100 SERIES	NPT Full Port Class 600 Super Duplex Stainless Steel	B-57
86K-200 SERIES	Socket-Weld Full Port Class 600 Super Duplex Stainless Steel	B-58
86K-300 SERIES	Sch. 5 Butt-Weld Full Port Class 600 Super Duplex Stainless Steel	B-59
86K-400 SERIES	Sch. 10 Butt-Weld Full Port Class 600 Super Duplex Stainless Steel	B-60
86K-500 SERIES	Sch. 40 Butt-Weld Full Port Class 600 Super Duplex Stainless Steel	B-61
86K-600 SERIES	Sch. 80 Butt-Weld Full Port Class 600 Super Duplex Stainless Steel	B-62
MONEL		
86E-100 SERIES	NPT Full Port Class 600 Monel	B-76
86E-200 SERIES	Socket-Weld Full Port Class 600 Monel	B-77

82-100/82A-140 SERIES

BRONZE 3-PIECE FULL PORT BALL VALVE

5 YEAR WARRANTY MADE IN USA

Female NPT Thread
Vacuum Service to 29 inches Hg.
MSS SP-110 Compliant.
CRN: OC10908.5C

82-100 & 82-140: 600 CWP (psig), 150 SWP* (psig)
82A-140: 400 CWP (psig), 150 SWP* (psig)
** Recommend utilizing SS ball & stem in 150 SWP applications.*

FEATURES

- Adjustable packing gland
- Blowout-proof stem design
- Reinforced seats
- Inline repairable
- Full port ball configuration, all sizes

VARIATIONS AVAILABLE

- 82-100 Series Standard
- 82-140 Series 316 SS Ball & Stem
- 82A-140 Series 3" & 4" Only (316 SS Ball & Stem/Adj. Length Locking Handle)

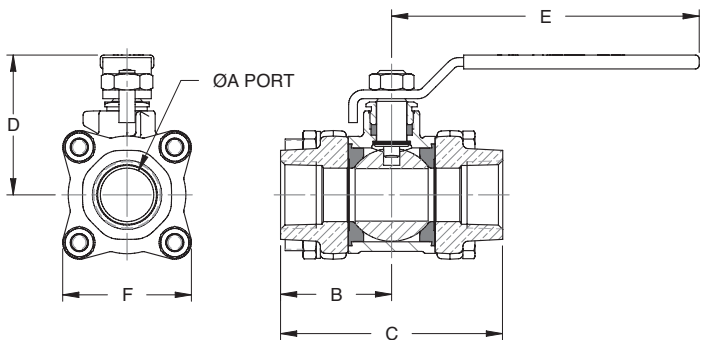

STANDARD MATERIAL LIST

	PART	MATERIAL
1	Lever and grip	Steel, Zinc Plated w/ Vinyl
2	Stem packing	MPTFE (Chevron Style PTFE 82A 3"& 4")
3	Stem bearing	RPTFE
4	Ball	ASTM B16 Brass,Chrome Plated (1/4"-2-1/2") ASTM 276-316 SS (3"-4")
5	Seat (2)	RPTFE
6	End cap (2)	B16 Brass (1/4" to 3/8") B584-C84400 (1/2"-4")
7	Gland nut	B16 Brass
8	Stem	ASTM B16 Brass, ASTM 276-316 SS (1/2"-4")
9	Lever nut	Steel, Zinc Plated
10	Body bolt	Steel, Zinc Plated
11	Hex nut	Steel, Zinc Plated
12	Body	ASTM B584-C84400 (Bronze)

DIMENSIONS

PART NO.	SIZE	A	B	C	D	E	F	WT.
82-101-01	1/4"	0.43	1.28	2.56	1.81	3.87	1.60	1.02
82-102-01	3/8"	0.50	1.28	2.56	1.81	3.87	1.60	1.04
82-103-01	1/2"	0.62	1.40	2.81	1.93	4.87	1.78	1.55
82-104-01	3/4"	0.81	1.71	3.43	2.18	4.87	1.98	2.27
82-105-01	1"	1.00	1.93	3.87	2.62	5.50	2.22	3.28
82-106-01	1-1/4"	1.25	2.37	4.75	2.87	5.50	2.70	5.62
82-107-01	1-1/2"	1.50	2.62	5.25	3.37	8.00	3.03	8.07
82-108-01	2"	2.00	3.01	6.03	3.68	8.00	3.87	14.42
82-109-01	2-1/2"	2.50	3.62	7.25	5.14	9.75	5.05	26.61
82A-140-01	3"	3.00	4.18	8.37	8.10	19.13	5.82	43.00
82A-14A-01	4"	4.00	5.43	10.86	8.88	19.13	7.77	106.00

OPTIONS AVAILABLE

(MORE INFORMATION IN SECTION J)

- Minimum quantities apply
- To specify an option, replace the "01" standard suffix with the suffix of the option.
- To specify multiple options, replace the "01" suffix with the desired suffixes in the numerical order shown below. NOTE: Not all suffixes can be combined together.

(SUFFIX)	OPTION	SIZES
-01	Standard Configuration	All
-P -01-	BSPP (Parallel) Thread Connection	All
-T -01-	BSPT (Tapered) Thread Connection	All
-02-	Static Grounded	All
-04-	2-1/4" Stem Extension (Carbon Steel, Zinc Plated)	1/4" to 2"
-05-	Plain Ball	All
-07-	Tee Handle	1/4" to 2"
-08-	90° Reversed Stem	All
-10-	SS Lever & Nut	All
-11-	Therma-Seal™ Insulating Tee Handle	1/4" to 2"
-14-	Vented Ball	All
-15-	Stainless Steel Locking Round Handle	1/4" to 2"
-16-	Vertical Chain Lever	1/2" to 2"
-18-	Plain Yellow Grip	1/4" to 2"
-19-	Lock Plate	1/4" to 2"
-20-	Slot Vented Ball	All
-21-	UHMWPE Seats	All
-23-	Tank Flange (2" only)	2"
-24-	Graphite Packing	All
-27-	Latch Lock Lever	1/2" to 2-1/2"
-30-	CamLock Handle	1/4" to 1-1/4"
-32-	SS Tee Handle & Nut	1/4" to 2"
-35-	PTFE Trim	All
-39-	SS Hi-Rise Locking Wheel Handle, SS Nut	1/4" to 1-1/4"
-40-	Cyl-Loc & Grounded	1/4" to 1/2"
-45-	Less Lever & Nut	All
-46-	Latch-Lock Lever - Lock in Closed Position Only	1/2" to 2"
-47-	SS Oval Latch-Lock Handle & Nut	1/2" to 3/4"
-48-	SS Oval Handle (No Latch) & Nut	1/4" to 2"
-49-	No Lubrication. Assembled Dry	All
-50-	2-1/4" CS Locking Stem Extension	1/4" to 2"
-56-	Multifill Seats	All
-57-	Oxygen Cleaned	All
-58-	Chain Lever - Horizontal	1/2" to 2"
-59-	SS External Trim	All
-60-	Grounded Ball & Stem	All
-63-	NPT x Solder	3/8" to 4"
-92-	Balancing Stop	1/4" to 2"

Pressure/Temperature Ratings - Page M-10, Graph No. 4

82LF-100/140 SERIES

LEAD FREE* BRONZE 3-PIECE FULL PORT BALL VALVE

Female NPT Thread
Vacuum Service to 29 inches Hg.
MSS SP-110 Compliant.

CRN: OC10908.5C
82LF-100 & 82LF-140: 600 CWP (psig), 150 SWP (psig)
** Recommend utilizing SS ball & stem in 150 SWP applications.*

FEATURES

- Adjustable packing gland
- Blowout-proof stem design
- Reinforced seats
- Easily identifiable blue tag
- Inline repairable
- Full port ball configuration, all sizes
- Lead Free* brass & bronze materials
- Design manufactured and 100% tested in the USA
- NSF/ANSI/CAN 61 - Section 8, Annex G
- NSF/ANSI 372 - Drinking Water System Components - Lead Content

VARIATIONS AVAILABLE

- 82LF-100 Series Standard
- 82LF-140 Series 316 SS Ball & Stem

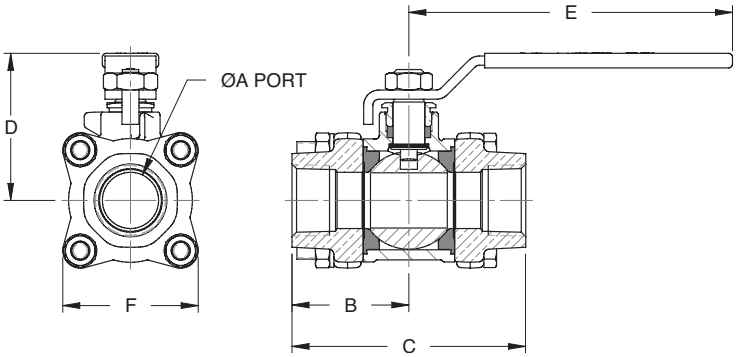

OPTIONS AVAILABLE

(MORE INFORMATION IN SECTION J)

- Minimum quantities apply
- To specify an option, replace the "01" standard suffix with the suffix of the option.
- To specify multiple options, replace the "01" suffix with the desired suffixes in the numerical order shown below. NOTE: Not all suffixes can be combined together.

(SUFFIX)	OPTION	SIZES
-01	Standard Configuration	All
-04-	2-1/4" Stem Extension (Carbon Steel, Zinc Plated)	1/4" to 2"
-07-	Tee Handle	1/4" to 2"
-10-	SS Lever & Nut	1/4" to 4"
-11-	Therma-Seal™ Insulating Tee Handle	1/4" to 2"
-15-	Stainless Steel Locking Round Handle	1/4" to 2"
-21-	UHMWPE Seats	1/4" to 4"
-27-	Latch Lock Lever	1/2" to 2"
-32-	SS Tee Handle & Nut	1/4" to 2"
-39-	SS Hi-Rise Locking Wheel Handle, SS Nut	1/4" to 1-1/4"
-47-	SS Oval Latch-Lock Handle & Nut	1/2" to 3/4"
-48-	SS Oval Handle (No Latch) & Nut	1/4" to 2"
-50-	2-1/4" CS Locking Stem Extension	1/4" to 2"
-59-	SS External Trim - 3-Piece Valves	All
-63-	NPT x Solder	3/8" to 2-1/2"

Pressure/Temperature Rating - Page M-10, Graph No. 4

STANDARD MATERIAL LIST

	PART	MATERIAL
1	Lever and grip	Steel, Zinc Plated w/ Vinyl
2	Stem packing	MPTFE
3	Stem bearing	RPTFE
4	Ball	C27451 Lead Free*, Chrome Plated (1/4"-2-1/2") ASTM A276-316 SS (3"-4")
5	Seat (2)	RPTFE
6	End cap (2)	C27451 (1/4" to 3/8") C89836 (1/2" to 4")
7	Gland nut	B16 Brass
8	Stem	C27451 Lead Free* Brass, ASTM 276-316 SS (3" - 4")
9	Lever nut	Steel, Zinc Plated
10	Body bolt	Steel, Zinc Plated
11	Hex nut	Steel, Zinc Plated
12	Body	C89836 Lead Free* bronze

DIMENSIONS

PART NO.	SIZE	A	B	C	D	E	F	WT.
82LF-101-01	1/4"	0.43	1.28	2.56	1.81	3.87	1.60	1.02
82LF-102-01	3/8"	0.50	1.28	2.56	1.81	3.87	1.60	1.04
82LF-103-01	1/2"	0.62	1.40	2.81	1.93	4.87	1.78	1.55
82LF-104-01	3/4"	0.81	1.71	3.43	2.18	4.87	1.98	2.27
82LF-105-01	1"	1.00	1.93	3.87	2.62	5.50	2.22	3.28
82LF-106-01	1-1/4"	1.25	2.37	4.75	2.87	5.50	2.70	5.62
82LF-107-01	1-1/2"	1.50	2.62	5.25	3.37	8.00	3.03	8.07
82LF-108-01	2"	2.00	3.01	6.03	3.68	8.00	3.87	14.42
82LF-109-01	2-1/2"	2.50	3.62	7.25	5.14	9.75	5.05	26.61

**LEAD FREE: The wetted surfaces of this product shall contain no more than 0.25% lead by weighted average. Complies with Federal Public Law 111-380. ANSI 3rd party approved and listed.*

82-200/82A-240 SERIES

BRONZE 3-PIECE FULL PORT BALL VALVE

5 YEAR WARRANTY MADE IN USA

Solder End
Vacuum Service to 29 inches Hg.
MSS SP-110 Compliant.
CRN: OC10908.5C

82-200 & 82-240: 600 CWP (psig), 150 SWP (psig)
82A-240: 400 CWP (psig), 150 SWP (psig)
** Recommend utilizing SS ball & stem in 150 SWP applications.*

FEATURES

- Adjustable packing gland
- Blowout-proof stem design
- Reinforced seats
- Inline repairable
- Full port ball configuration, all sizes

VARIATIONS AVAILABLE

- 82-200 Series Standard
- 82-240 Series 316 SS Ball & Stem
- 82A-240 Series 3" & 4" Only (316 SS Ball & Stem/Adj. Length Locking Handle)

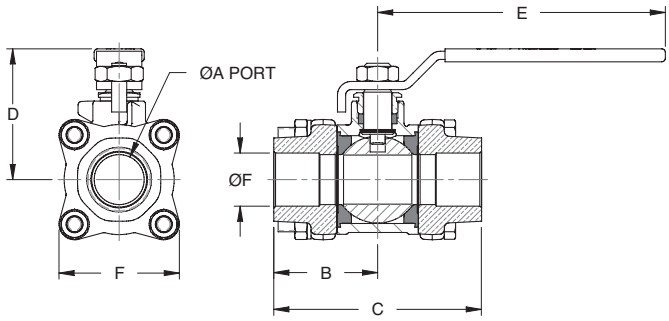

STANDARD MATERIAL LIST

	PART	MATERIAL
1	Lever and grip	Steel, Zinc Plated w/ Vinyl
2	Stem packing	MPTFE (Chevron Style PTFE 82A 3" & 4")
3	Stem bearing	RPTFE
4	Ball	ASTM B16 Brass,Chrome Plated (1/4"-2-1/2") ASTM 276-316 SS (3" & 4")
5	Seat (2)	RPTFE
6	End cap (2)	B16 Brass (1/4" to 3/8") B584-C84400 (1/2" to 4")
7	Gland nut	B16 Brass
8	Stem	ASTM B16 Brass, ASTM 276-316 SS (3" & 4")
9	Lever nut	Steel, Zinc Plated
10	Body bolt	Steel, Zinc Plated
11	Hex nut	Steel, Zinc Plated
12	Body	ASTM B584-C84400 (Bronze)

Pressure/Temperature Ratings - Page M-10, Graph No. 4

OPTIONS AVAILABLE

(MORE INFORMATION IN SECTION J)

- Minimum quantities apply
- To specify an option, replace the "01" standard suffix with the suffix of the option.
- To specify multiple options, replace the "01" suffix with the desired suffixes in the numerical order shown below. NOTE: Not all suffixes can be combined together.

(SUFFIX)	OPTION	SIZES
-01	Standard Configuration	All
-02-	Static Grounded	All
-04-	2-1/4" Stem Extension (Carbon Steel, Zinc Plated)	3/8" to 2"
-05-	Plain Ball	All
-07-	Tee Handle	3/8" to 2"
-08-	90° Reversed Stem	All
-10-	SS Lever & Nut	All
-11-	Therma-Seal™ Insulating Tee Handle	1/4" to 2"
-14-	Vented Ball	All
-15-	Stainless Steel Locking Round Handle	3/8" to 2"
-16-	Vertical Chain Lever	1/2" to 2"
-18-	Plain Yellow Grip	3/8" to 2"
-19-	Lock Plate	3/8" to 2"
-20-	Slot Vented Ball	All
-21-	UHMWPE Seats	All
-23-	Tank Flange	2"
-24-	Graphite Packing	All
-27-	Latch Lock Lever	1/2" to 2"
-30-	CamLock Handle	3/8" to 1-1/4"
-32-	SS Tee Handle & Nut	3/8" to 2"
-35-	PTFE Trim	All
-39-	SS Hi-Rise Locking Wheel Handle, SS Nut	3/8" to 1-1/4"
-40-	Cyl-Loc & Grounded	3/8" to 1/2"
-45-	Less Lever & Nut	All
-46-	Latch-Lock Lever - Lock in Closed Position Only	1/2" to 2"
-47-	SS Oval Latch-Lock Handle & Nut	3/8" to 3/4"
-48-	SS Oval Handle (No Latch) & Nut	3/8" to 2"
-49-	No Lubrication. Assembled Dry	All
-50-	2-1/4" CS Locking Stem Extension	3/8" to 2"
-56-	Multifill Seats	All
-57-	Oxygen Cleaned	All
-58-	Chain Lever - Horizontal	3/8" to 2"
-59-	SS External Trim - 3-Piece Valves	All
-60-	Grounded Ball & Stem	All
-92-	Balancing Stop	3/8" to 2"

DIMENSIONS

PART NO.	SIZE	A	B	C	D	E	F	G	H	WT.
82-202-01	3/8"	0.44	1.28	2.56	1.81	3.87	0.50	0.38	1.60	1.04
82-203-01	1/2"	0.56	1.40	2.81	1.93	4.87	0.63	0.50	1.78	1.55
82-204-01	3/4"	0.83	1.71	3.43	2.18	4.87	0.88	0.75	1.98	2.27
82-205-01	1"	1.00	1.93	3.87	2.62	5.50	1.13	0.90	2.22	3.28
82-206-01	1-1/4"	1.25	2.37	4.75	2.87	5.50	1.38	0.97	2.70	5.62
82-207-01	1-1/2"	1.50	2.62	5.25	3.37	8.00	1.63	1.09	3.03	8.07
82-208-01	2"	2.00	3.01	6.03	3.68	8.00	2.13	1.34	3.87	14.42
82-209-01	2-1/2"	2.50	3.62	7.25	5.14	9.75	2.63	1.47	5.05	26.61
82A-240-01	3"	3.00	4.18	8.37	8.10	19.13	3.13	1.66	5.82	43.00
82A-24A-01	4"	4.00	5.43	10.86	8.88	19.13	4.13	2.16	7.77	106.00

82LF-200/240 SERIES

LEAD FREE* BRONZE 3-PIECE FULL PORT BALL VALVE

Solder End
Vacuum Service to 29 inches Hg.
MSS SP-110 Compliant.

CRN: OC10908.5C
82LF-200 & 82LF-240: 600 CWP (psig). 150 SWP (psig)
** Recommend utilizing SS ball & stem in 150 SWP applications.*

FEATURES

- Adjustable packing gland
- Blowout-proof stem design
- Reinforced seats
- Easily identifiable blue tag
- Inline repairable
- Full port ball configuration, all sizes
- Lead Free* brass & bronze materials
- Designed, manufactured and 100% tested in the USA
- NSF/ANSI/CAN 61 - Section 8, Annex G
- NSF/ANSI 372 - Drinking Water System Components - Lead Content

VARIATIONS AVAILABLE

- 82LF-200 Series Standard
- 82LF-240 Series 316 SS Ball & Stem

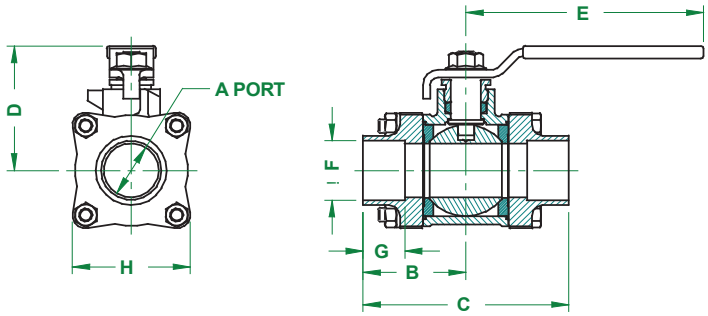

OPTIONS AVAILABLE

(MORE INFORMATION IN SECTION J)

- Minimum quantities apply
- To specify an option, replace the "01" standard suffix with the suffix of the option.
- To specify multiple options, replace the "01" suffix with the desired suffixes in the numerical order shown below. NOTE: Not all suffixes can be combined together.

(SUFFIX)	OPTION	SIZES
-01	Standard Configuration	All
-04-	2-1/4" Stem Extension (Carbon Steel, Zinc Plated)	3/8" to 2"
-07-	Tee Handle	3/8" to 2"
-10-	SS Lever & Nut	3/8" to 4"
-11-	Therma-Seal™ Insulating Tee Handle	1/4" to 2"
-15-	Stainless Steel Locking Round Handle	3/8" to 2"
-27-	Latch Lock Lever	1/2" to 2"
-32-	SS Tee Handle & Nut	3/8" to 2"
-39-	SS Hi-Rise Locking Wheel Handle, SS Nut	3/8" to 1-1/4"
-47-	SS Oval Latch-Lock Handle & Nut	3/8" to 3/4"
-48-	SS Oval Handle (No Latch) & Nut	3/8" to 2"
-50-	2-1/4" CS Locking Stem Extension	3/8" to 2"
-57-	Oxygen Cleaned	3/8" to 4"
-59-	SS External Trim - 3-Piece Valves	3/8" to 4"

Pressure/Temperature Ratings - Page M-10, Graph No. 4

STANDARD MATERIAL LIST

	PART	MATERIAL
1	Lever and grip	Steel, Zinc Plated w/ Vinyl
2	Stem packing	MPTFE (Chevron Style PTFE 82A 3" & 4")
3	Stem bearing	RPTFE
4	Ball	C27451 Lead Free* (Brass),Chrome Plated (1/4" - 2-1/2") ASTM 276-316 SS (3" & 4")
5	Seat (2)	RPTFE
6	End cap (2)	C27451 (1/4" to 3/8"), C89836 (1/2"to 4")
7	Gland nut	B16 Brass
8	Stem	C27451 Lead Free* (Brass), ASTM 276-316 SS (3" & 4")
9	Lever nut	Steel, Zinc Plated
10	Body bolt	Steel, Zinc Plated
11	Hex nut	Steel, Zinc Plated
12	Body	C89836 Lead Free* (Bronze)

DIMENSIONS

PART NO.	SIZE	A	B	C	D	E	F	G	H	WT.
82LF-202-01	3/8"	0.44	1.28	2.56	1.81	3.87	0.50	0.38	1.60	1.04
82LF-203-01	1/2"	0.56	1.40	2.81	1.93	4.87	0.63	0.50	1.78	1.55
82LF-204-01	3/4"	0.83	1.71	3.43	2.18	4.87	0.88	0.75	1.98	2.27
82LF-205-01	1"	1.00	1.93	3.87	2.62	5.50	1.13	0.90	2.22	3.28
82LF-206-01	1-1/4"	1.25	2.37	4.75	2.87	5.50	1.38	0.97	2.70	5.62
82LF-207-01	1-1/2"	1.50	2.62	5.25	3.37	8.00	1.63	1.09	3.03	8.07
82LF-208-01	2"	2.00	3.01	6.03	3.68	8.00	2.13	1.34	3.87	14.42
82LF-209-01	2-1/2"	2.50	3.62	7.25	5.14	9.75	2.63	1.47	5.05	26.61

**LEAD FREE: The wetted surfaces of this product shall contain no more than 0.25% lead by weighted average. Complies with Federal Public Law 111-380. ANSI 3rd party approved and listed.*

83A-140 SERIES

CARBON STEEL 3-PIECE FULL PORT
1500 CWP NPT BALL VALVE

5 YEAR WARRANTY MADE IN USA

STANDARD COMPLIANCE

- Valve Design: MSS SP-110, NACE MR0175 (2000) & MR0103 (2012)
- End Connections: NPT per ASME B1.20.1
- Valve Marking: MSS SP-25
- Production Testing: MSS SP-110

FEATURES

- 3-piece construction w/ enclosed fasteners
- Full port
- Stainless steel trim & hardware
- Swing-out center section
- Pressure balanced solid ball
- Compression controlled RPTFE gaskets
- Anti-blowout one piece bottom entry stem
- Two-position locking
- Adjustable multi-piece PTFE "V" style packing
- Fully machined ISO 5211 mounting
- Cast bosses on the center-section and end caps for bleed & drain ports
- Vacuum service to 29 in of Hg.
- 150 psig saturated steam

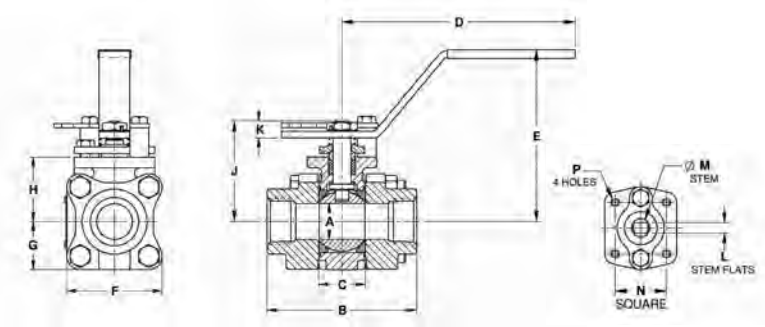

OPTIONS AVAILABLE

(MORE INFORMATION IN SECTION J)

- Minimum quantities apply
- To specify an option, replace the "01" standard suffix with the suffix of the option.
- To specify multiple options, replace the "01" suffix with the desired suffixes in the numerical order shown below. NOTE: Not all suffixes can be combined together.

(SUFFIX)	OPTION	SIZES
-01	Standard Configuration	All
-P -01-	BSPP (Parallel) Thread Connection	All
-T- 01-	BSPT (Tapered) Thread Connection	All
-04-	2-1/4" Stem Extension (Carbon Steel, Zinc Plated)	All
-14-	Vented Ball	All
-15-	Stainless Steel Locking Round Handle	All
-49-	No Lubrication. Assembled Dry	All
-60-	Static Grounding	All
-62-	Center Section Only	All
-63-	NPT x Socketweld	All
-67-	Cleaned for Industrial Gases	All
-69-	Drilled & Tapped Purge & Drains	All
-70-	4" Extended Bonnet	All
-76-	Live Loaded (Lever Operated)	All
-77-	Live Loaded (Actuated)	All
-90-	Double Packed 4" Extended Bonnet	All
-9P-	Double Packed 4" Extended Bonnet w/ Monitoring Port	All
-EF-	Graphite Packing (API 641 Compliant)	3/4" to 2"
-KF-	PCTFE Stem Bearing	All
-SR-	Spring Return Handle	1/4" to 1"
-UA-	AIS (American Iron & Steel) Compliant	All
-ZP1-	Fugitive Emissions Packing (Viton)	All
-ZP2-	Fugitive Emissions Packing (Buna-N)	All
-ZP3-	Fugitive Emissions Packing (Kalrez)	All

STANDARD MATERIAL LIST

	PART	MATERIAL
1	Body	ASTM A216-WCB
2	End Caps	ASTM A216-WCB
3	Ball	ASTM A276-316SS
4	Stem	ASTM A276-316SS
5	Seat	Multi-Seal
6	Packing	PTFE
7	Stem Bearing	PEEK/PTFE
8	Body Gasket	RPTFE
9	Body Bolts	18-8 Stainless Steel
10	Body Nuts	18-8 Stainless Steel
11	Stop Bolts	18-8 Stainless Steel
12	Gland Bolts	18-8 Stainless Steel
13	Handle Nut/Screw	300 Series Stainless Steel
14	Packing Gland	ASTM A276-316SS
15	Gland Plate	300 Series Stainless Steel
16	Lever Handle	300 Series Stainless Steel
17	Lock Plate	300 Series Stainless Steel
18	Stops	300 Series Stainless Steel

Pressure/Temperature Ratings - Page M-19, Graph No. 23

DIMENSIONS

PART NO.	SIZE	A	B	C	D	E	F	G	H	J	K	L	M	N	P	WT.
83A-141-01	1/4"	0.37	2.80	0.89	5.12	3.02	2.02	1.01	1.39	1.97	0.23	0.245	0.375	1.00	10-24	2.3
83A-142-01	3/8"	0.50	2.80	0.89	5.12	3.02	2.02	1.01	1.39	1.97	0.23	0.245	0.375	1.00	10-24	2.3
83A-143-01	1/2"	0.50	2.80	0.89	5.12	3.02	2.02	1.01	1.39	1.97	0.23	0.245	0.375	1.00	10-24	2.3
83A-144-01	3/4"	0.75	3.68	1.10	5.53	3.40	2.40	1.20	1.65	2.35	0.24	0.312	0.500	1.392	1/4-20	4.0
83A-145-01	1"	1.00	4.19	1.31	6.53	4.80	2.67	1.34	1.80	2.80	0.48	0.287	0.500	1.392	1/4-20	5.7
83A-146-01	1-1/4"	1.50	4.50	1.97	6.65	4.70	3.84	1.92	2.49	3.89	0.72	0.412	0.625	1.949	5/16-18	14.2
83A-147-01	1-1/2"	1.50	4.98	1.97	6.65	4.70	3.84	1.92	2.49	3.89	0.72	0.412	0.625	1.949	5/16-18	14.4
83A-148-01	2"	2.00	5.86	2.56	8.40	5.47	4.56	2.46	3.17	4.74	0.80	0.477	0.750	1.949	5/16-18	24.4

REV. 17SEP19

83A-240 SERIES

CARBON STEEL 3-PIECE FULL PORT
1500 CWP SOCKET WELD BALL VALVE

5 YEAR WARRANTY MADE IN USA

STANDARD COMPLIANCE

- Valve Design: MSS SP-110, NACE MR0175 (2000) & MR0103 (2012)
- End Connections: Socket-weld per ASME B16.11
- Valve Marking: MSS SP-25
- Production Testing: MSS SP-110

FEATURES

- 3-piece construction w/ enclosed fasteners
- Full port
- Stainless steel trim & hardware
- Swing-out center section
- Pressure balanced solid ball
- Compression controlled RPTFE gaskets
- Anti-blowout one piece bottom entry stem
- Two-position locking
- Adjustable multi-piece PTFE "V" style packing
- Fully machined ISO 5211 mounting
- Cast bosses on the center-section and end caps for bleed & drain ports
- Vacuum service to 29 in of Hg.
- 150 psig saturated steam

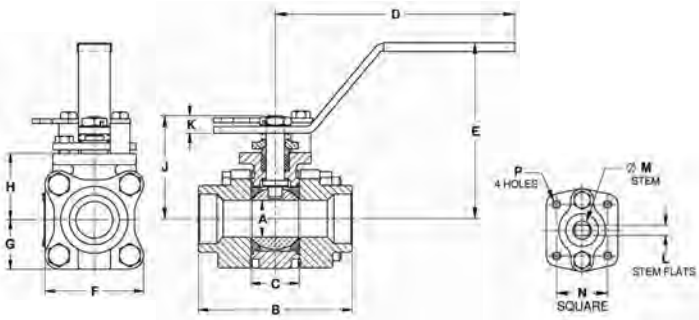

OPTIONS AVAILABLE

(MORE INFORMATION IN SECTION J)

- Minimum quantities apply
- To specify an option, replace the "01" standard suffix with the suffix of the option.
- To specify multiple options, replace the "01" suffix with the desired suffixes in the numerical order shown below. NOTE: Not all suffixes can be combined together.

(SUFFIX)	OPTION	SIZES
-01	Standard Configuration	All
-04-	2-1/4" Stem Extension (Carbon Steel, Zinc Plated)	All
-14-	Vented Ball	All
-15-	Stainless Steel Locking Round Handle	All
-49-	No Lubrication. Assembled Dry	All
-60-	Static Grounding	All
-62-	Center Section Only	All
-67-	Cleaned for Industrial Gases	All
-69-	Drilled & Tapped Purge & Drains	All
-70-	4" Extended Bonnet	All
-76-	Live Loaded (Lever Operated)	All
77-	Live Loaded (Actuated)	All
-90-	Double Packed 4" Extended Bonnet	All
-9P-	Double Packed 4" Extended Bonnet w/ Monitoring Port	All
-EF-	Graphite Packing (API 641 Compliant)	3/4" to 2"
-KF-	PCTFE Stem Bearing	All
-SR-	Spring Return Handle	1/4" to 1"
-UA-	AIS (American Iron & Steel) Compliant	All
-ZP1-	Fugitive Emissions Packing (Viton)	All
-ZP2-	Fugitive Emissions Packing (Buna-N)	All
-ZP3-	Fugitive Emissions Packing (Kalrez)	All

Pressure/Temperature Ratings - Page M-19, Graph No. 23

STANDARD MATERIAL LIST

	PART	MATERIAL
1	Body	ASTM A216-WCB
2	End Caps	ASTM A216-WCB
3	Ball	ASTM A276-316SS
4	Stem	ASTM A276-316SS
5	Seat	Multi-Seal
6	Packing	PTFE
7	Stem Bearing	PEEK/PTFE
8	Body Gasket	RPTFE
9	Body Bolts	18-8 Stainless Steel
10	Body Nuts	18-8 Stainless Steel
11	Stop Bolts	18-8 Stainless Steel
12	Gland Bolts	18-8 Stainless Steel
13	Handle Nut/Screw	300 Series Stainless Steel
14	Packing Gland	ASTM A276-316SS
15	Gland Plate	300 Series Stainless Steel
16	Lever Handle	300 Series Stainless Steel
17	Lock Plate	300 Series Stainless Steel
18	Stops	300 Series Stainless Steel

DIMENSIONS

PART NO.	SIZE	A	B	C	D	E	F	G	H	J	K	L	M	N	P	WT.
83A-241-01	1/4"	0.37	2.80	0.89	5.12	3.02	2.02	1.01	1.39	1.97	0.23	0.245	0.375	1.00	10-24	2.3
83A-242-01	3/8"	0.50	2.80	0.89	5.12	3.02	2.02	1.01	1.39	1.97	0.23	0.245	0.375	1.00	10-24	2.3
83A-243-01	1/2"	0.50	2.80	0.89	5.12	3.02	2.02	1.01	1.39	1.97	0.23	0.245	0.375	1.00	10-24	2.3
83A-244-01	3/4"	0.75	3.68	1.10	5.53	3.40	2.40	1.20	1.65	2.35	0.24	0.312	0.500	1.392	1/4-20	4.0
83A-245-01	1"	1.00	4.19	1.31	6.53	4.80	2.67	1.34	1.80	2.80	0.48	0.287	0.500	1.392	1/4-20	5.7
83A-246-01	1-1/4"	1.50	4.50	1.97	6.65	4.70	3.84	1.92	2.49	3.89	0.72	0.412	0.625	1.949	5/16-18	14.2
83A-247-01	1-1/2"	1.50	4.98	1.97	6.65	4.70	3.84	1.92	2.49	3.89	0.72	0.412	0.625	1.949	5/16-18	14.4
83A-248-01	2"	2.00	5.86	2.56	8.40	5.47	4.56	2.46	3.17	4.74	0.80	0.477	0.750	1.949	5/16-18	24.4

REV. 17SEP19

aalberts integrated piping systems

83A-340 SERIES

CARBON STEEL 3-PIECE FULL PORT
1500 CWP SCH. 5 BUTT WELD BALL VALVE

5 YEAR WARRANTY MADE IN USA

STANDARD COMPLIANCE

- Valve Design: MSS SP-110, NACE MR0175 (2000) & MR0103 (2012)
- End Connections: Butt-Weld per ASME B16.25
- Valve Marking: MSS SP-25
- Production Testing: MSS SP-110

FEATURES

- 3-piece construction w/ enclosed fasteners
- Full port
- Stainless steel trim & hardware
- Swing-out center section
- Pressure balanced solid ball
- Compression controlled RPTFE gaskets
- Anti-blowout one piece bottom entry stem
- Two-position locking
- Adjustable multi-piece PTFE "V" style packing
- Fully machined ISO 5211 mounting
- Cast bosses on the center-section and end caps for bleed & drain ports
- Vacuum service to 29 in of Hg.
- 150 psig saturated steam

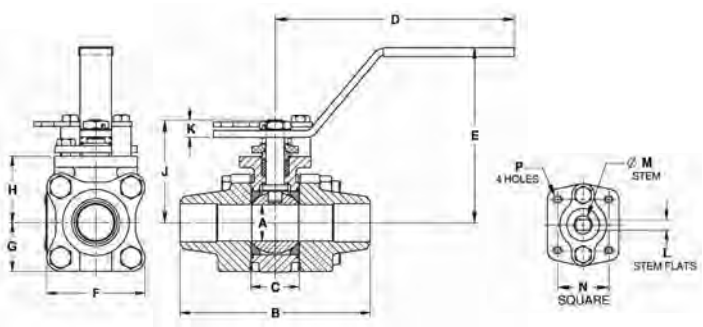

VARIATIONS AVAILABLE

- 83A-440 Schedule 10 Butt-Weld
- 83A-540 Schedule 40 Butt-Weld
- 83A-640 Schedule 80 Butt-Weld

OPTIONS AVAILABLE

(MORE INFORMATION IN SECTION J)

- Minimum quantities apply
- To specify an option, replace the "01" standard suffix with the suffix of the option.
- To specify multiple options, replace the "01" suffix with the desired suffixes in the numerical order shown below. NOTE: Not all suffixes can be combined together.

(SUFFIX)	OPTION	SIZES
-01	Standard Configuration	All
-04-	2-1/4" Stem Extension (Carbon Steel, Zinc Plated)	All
-14-	Vented Ball	All
-15-	Stainless Steel Locking Round Handle	All
-49-	No Lubrication. Assembled Dry	All
-60-	Static Grounding	All
-62-	Center Section Only	All
-66-	NPT x Buttweld	All
-67-	Cleaned for Industrial Gases	All
-69-	Drilled & Tapped Purge & Drains	All
-70-	4" Extended Bonnet	All
-76-	Live Loaded (Lever Operated)	All
-77-	Live Loaded (Actuated)	All
-90-	Double Packed 4" Extended Bonnet	All
-9P-	Double Packed 4" Extended Bonnet w/ Monitoring Port	All
-EF-	Graphite Packing (API 641 Compliant)	3/4" to 2"
-KF-	PCTFE Stem Bearing	All
-SR-	Spring Return Handle	1/2" to 1"
-UA-	AIS (American Iron & Steel) Compliant	All
-ZP1-	Fugitive Emissions Packing (Viton)	All
-ZP2-	Fugitive Emissions Packing (Buna-N)	All
-ZP3-	Fugitive Emissions Packing (Kalrez)	All

Pressure/Temperature Ratings - Page M-19, Graph No. 23

STANDARD MATERIAL LIST

	PART	MATERIAL
1	Body	ASTM A216-WCB
2	End Caps	ASTM A216-WCB
3	Ball	ASTM A276-316SS
4	Stem	ASTM A276-316SS
5	Seat	Multi-Seal
6	Packing	PTFE
7	Stem Bearing	PEEK/PTFE
8	Body Gasket	RPTFE
9	Body Bolts	18-8 Stainless Steel
10	Body Nuts	18-8 Stainless Steel
11	Stop Bolts	18-8 Stainless Steel
12	Gland Bolts	18-8 Stainless Steel
13	Handle Nut/Screw	300 Series Stainless Steel
14	Packing Gland	ASTM A276-316SS
15	Gland Plate	300 Series Stainless Steel
16	Lever Handle	300 Series Stainless Steel
17	Lock Plate	300 Series Stainless Steel
18	Stops	300 Series Stainless Steel

DIMENSIONS

PART NO.	SIZE	A	B	C	D	E	F	G	H	J	K	L	M	N	P	WT.
83A-343-01	1/2"	0.50	3.80	0.89	5.12	3.02	2.02	1.01	1.39	1.97	0.23	0.245	0.375	1.00	10-24	2.3
83A-344-01	3/4"	0.75	4.66	1.10	5.53	3.40	2.40	1.20	1.65	2.35	0.24	0.312	0.500	1.392	1/4-20	4.0
83A-345-01	1"	1.00	5.19	1.31	6.53	4.80	2.67	1.34	1.80	2.80	0.48	0.287	0.500	1.392	1/4-20	5.7
83A-347-01	1-1/2"	1.50	5.96	1.97	6.65	4.70	3.84	1.92	2.49	3.89	0.72	0.412	0.625	1.949	5/16-18	14.4
83A-348-01	2"	2.00	6.84	2.56	8.40	5.47	4.56	2.46	3.17	4.74	0.80	0.477	0.750	1.949	5/16-18	24.4

REV. 17SEP19

83A-440 SERIES

CARBON STEEL 3-PIECE FULL PORT
1500 CWP SCH. 10 BUTT WELD BALL VALVE

5 YEAR WARRANTY MADE IN USA

STANDARD COMPLIANCE

- Valve Design: MSS SP-110, NACE MR0175 (2000) & MR0103 (2012)
- End Connections: Butt-Weld per ASME B16.25
- Valve Marking: MSS SP-25
- Production Testing: MSS SP-110

FEATURES

- 3-piece construction w/ enclosed fasteners
- Full port
- Stainless steel trim & hardware
- Swing-out center section
- Pressure balanced solid ball
- Compression controlled RPTFE gaskets
- Anti-blowout one piece bottom entry stem
- Two-position locking
- Adjustable multi-piece PTFE "V" style packing
- Fully machined ISO 5211 mounting
- Cast bosses on the center-section and end caps for bleed & drain ports
- Vacuum service to 29 in of Hg.
- 150 psig saturated steam

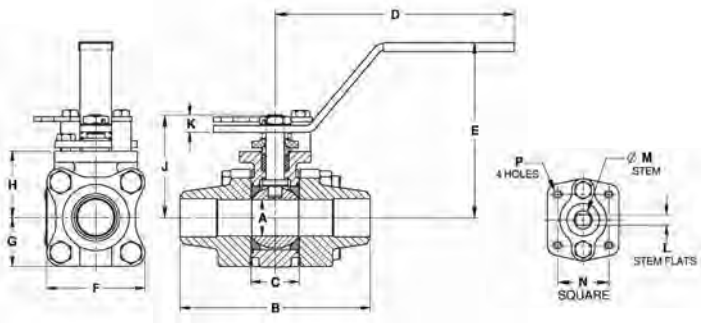

VARIATIONS AVAILABLE

- 83A-340 Schedule 5 Butt-Weld
- 83A-540 Schedule 40 Butt-Weld
- 83A-640 Schedule 80 Butt-Weld

OPTIONS AVAILABLE

(MORE INFORMATION IN SECTION J)

- Minimum quantities apply
- To specify an option, replace the "01" standard suffix with the suffix of the option.
- To specify multiple options, replace the "01" suffix with the desired suffixes in the numerical order shown below. NOTE: Not all suffixes can be combined together.

(SUFFIX)	OPTION	SIZES
-01	Standard Configuration	All
-04-	2-1/4" Stem Extension (Carbon Steel, Zinc Plated)	All
-14-	Vented Ball	All
-15-	Stainless Steel Locking Round Handle	All
-49-	No Lubrication. Assembled Dry	All
-60-	Static Grounding	All
-62-	Center Section Only	All
-66-	FNPT x Buttweld	All
-67-	Cleaned for Industrial Gases	All
-69-	Drilled & Tapped Purge & Drains	All
-70-	4" Extended Bonnet	All
-76-	Live Loaded (Lever Operated)	All
-77-	Live Loaded (Actuated)	All
-90-	Double Packed 4" Extended Bonnet	All
-9P-	Double Packed 4" Extended Bonnet w/ Monitoring Port	All
-EF-	Graphite Packing (API 641 Compliant)	3/4" to 2"
-KF-	PCTFE Stem Bearing	All
-SR-	Spring Return Handle	1/2" to 1"
-UA-	AIS (American Iron & Steel) Compliant	All
-ZP1-	Fugitive Emissions Packing (Viton)	All
-ZP2-	Fugitive Emissions Packing (Buna-N)	All
-ZP3-	Fugitive Emissions Packing (Kalrez)	All

Pressure/Temperature Ratings - Page M-19, Graph No. 23

STANDARD MATERIAL LIST

	PART	MATERIAL
1	Body	ASTM A216-WCB
2	End Caps	ASTM A216-WCB
3	Ball	ASTM A276-316SS
4	Stem	ASTM A276-316SS
5	Seat	Multi-Seal
6	Packing	PTFE
7	Stem Bearing	PEEK/PTFE
8	Body Gasket	RPTFE
9	Body Bolts	18-8 Stainless Steel
10	Body Nuts	18-8 Stainless Steel
11	Stop Bolts	18-8 Stainless Steel
12	Gland Bolts	18-8 Stainless Steel
13	Handle Nut/Screw	300 Series Stainless Steel
14	Packing Gland	ASTM A276-316SS
15	Gland Plate	300 Series Stainless Steel
16	Lever Handle	300 Series Stainless Steel
17	Lock Plate	300 Series Stainless Steel
18	Stops	300 Series Stainless Steel

DIMENSIONS

PART NO.	SIZE	A	B	C	D	E	F	G	H	J	K	L	M	N	P	WT.
83A-443-01	1/2"	0.50	3.80	0.89	5.12	3.02	2.02	1.01	1.39	1.97	0.23	0.245	0.375	1.00	10-24	2.3
83A-444-01	3/4"	0.75	4.66	1.10	5.53	3.40	2.40	1.20	1.65	2.35	0.24	0.312	0.500	1.392	1/4-20	4.0
83A-445-01	1"	1.00	5.19	1.31	6.53	4.80	2.67	1.34	1.80	2.80	0.48	0.287	0.500	1.392	1/4-20	5.7
83A-447-01	1-1/2"	1.50	5.96	1.97	6.65	4.70	3.84	1.92	2.49	3.89	0.72	0.412	0.625	1.949	5/16-18	14.4
83A-448-01	2"	2.00	6.84	2.56	8.40	5.47	4.56	2.46	3.17	4.74	0.80	0.477	0.750	1.949	5/16-18	24.4

REV. 17SEP19

aalberts integrated piping systems

83A-540 SERIES

CARBON STEEL 3-PIECE FULL PORT
1500 CWP SCH. 40 BUTT WELD BALL VALVE

5 YEAR WARRANTY MADE IN USA

STANDARD COMPLIANCE

- Valve Design: MSS SP-110, NACE MR0175 (2000) & MR0103 (2012)
- End Connections: Butt-Weld per ASME B16.25
- Valve Marking: MSS SP-25
- Production Testing: MSS SP-110

FEATURES

- 3-piece construction w/ enclosed fasteners
- Full port
- Stainless steel trim & hardware
- Swing-out center section
- Pressure balanced solid ball
- Compression controlled RPTFE gaskets
- Anti-blowout one piece bottom entry stem
- 150 psig saturated steam
- Two-position locking
- Adjustable multi-piece PTFE "V" style packing
- Fully machined ISO 5211 mounting
- Cast bosses on the center-section and end caps for bleed & drain ports
- Vacuum service to 29 in of Hg.

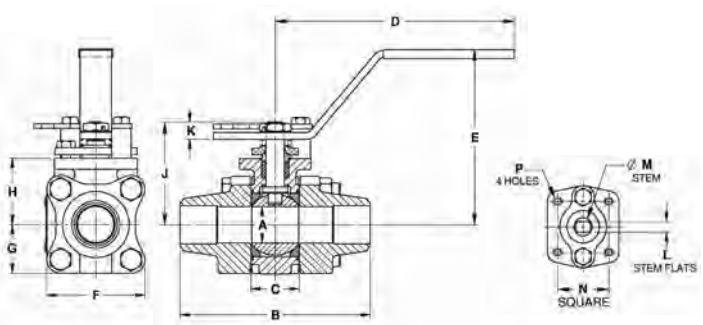

VARIATIONS AVAILABLE

- 83A-340 Schedule 5 Butt-Weld
- 83A-440 Schedule 10 Butt-Weld
- 83A-640 Schedule 80 Butt-Weld

OPTIONS AVAILABLE

(MORE INFORMATION IN SECTION J)

- Minimum quantities apply
- To specify an option, replace the "01" standard suffix with the suffix of the option.
- To specify multiple options, replace the "01" suffix with the desired suffixes in the numerical order shown below. NOTE: Not all suffixes can be combined together.

(SUFFIX)	OPTION	SIZES
-01	Standard Configuration	All
-04-	2-1/4" Stem Extension (Carbon Steel, Zinc Plated)	All
-14-	Vented Ball	All
-15-	Stainless Steel Locking Round Handle	All
-49-	No Lubrication. Assembled Dry	All
-60-	Static Grounding	All
-62-	Center Section Only	All
-66-	FNPT x Buttweld	All
-67-	Cleaned for Industrial Gases	All
-69-	Drilled & Tapped Purge & Drains	All
-70-	4" Extended Bonnet	All
-76-	Live Loaded (Lever Operated)	All
-77-	Live Loaded (Actuated)	All
-90-	Double Packed 4" Extended Bonnet	All
-9P-	Double Packed 4" Extended Bonnet w/ Monitoring Port	All
-EF-	Graphite Packing (API 641 Compliant)	3/4" to 2"
-KF-	PCTFE Stem Bearing	All
-SR-	Spring Return Handle	1/2" to 1"
-UA-	AIS (American Iron & Steel) Compliant	All
-ZP1-	Fugitive Emissions Packing (Viton)	All
-ZP2-	Fugitive Emissions Packing (Buna-N)	All
-ZP3-	Fugitive Emissions Packing (Kalrez)	All

Pressure/Temperature Ratings - Page M-19, Graph No. 23

STANDARD MATERIAL LIST

	PART	MATERIAL
1	Body	ASTM A216-WCB
2	End Caps	ASTM A216-WCB
3	Ball	ASTM A276-316SS
4	Stem	ASTM A276-316SS
5	Seat	Multi-Seal
6	Packing	PTFE
7	Stem Bearing	PEEK/PTFE
8	Body Gasket	RPTFE
9	Body Bolts	18-8 Stainless Steel
10	Body Nuts	18-8 Stainless Steel
11	Stop Bolts	18-8 Stainless Steel
12	Gland Bolts	18-8 Stainless Steel
13	Handle Nut/Screw	300 Series Stainless Steel
14	Packing Gland	ASTM A276-316SS
15	Gland Plate	300 Series Stainless Steel
16	Lever Handle	300 Series Stainless Steel
17	Lock Plate	300 Series Stainless Steel
18	Stops	300 Series Stainless Steel

DIMENSIONS

PART NO.	SIZE	A	B	C	D	E	F	G	H	J	K	L	M	N	P	WT.
83A-543-01	1/2"	0.50	3.80	0.89	5.12	3.02	2.02	1.01	1.39	1.97	0.23	0.245	0.375	1.00	10-24	2.3
83A-544-01	3/4"	0.75	4.66	1.10	5.53	3.40	2.40	1.20	1.65	2.35	0.24	0.312	0.500	1.392	1/4-20	4.0
83A-545-01	1"	1.00	5.19	1.31	6.53	4.80	2.67	1.34	1.80	2.80	0.48	0.287	0.500	1.392	1/4-20	5.7
83A-547-01	1-1/2"	1.50	5.96	1.97	6.65	4.70	3.84	1.92	2.49	3.89	0.72	0.412	0.625	1.949	5/16-18	14.4
83A-548-01	2"	2.00	6.84	2.56	8.40	5.47	4.56	2.46	3.17	4.74	0.80	0.477	0.750	1.949	5/16-18	24.4

REV. 17SEP19

83A-640 SERIES

CARBON STEEL 3-PIECE FULL PORT
1500 CWP SCH. 80 BUTT WELD BALL VALVE

5 YEAR WARRANTY MADE IN USA

STANDARD COMPLIANCE

- Valve Design: MSS SP-110, NACE MR0175 (2000) & MR0103 (2012)
- End Connections: Butt-Weld per ASME B16.25
- Valve Marking: MSS SP-25
- Production Testing: MSS SP-110

FEATURES

- 3-piece construction w/ enclosed fasteners
- Full port
- Stainless steel trim & hardware
- Swing-out center section
- Pressure balanced solid ball
- Compression controlled RPTFE gaskets
- Anti-blowout one piece bottom entry stem
- Two-position locking
- Adjustable multi-piece PTFE "V" style packing
- Fully machined ISO 5211 mounting
- Cast bosses on the center-section and end caps for bleed & drain ports
- Vacuum service to 29 in of Hg.
- 150 psig saturated steam

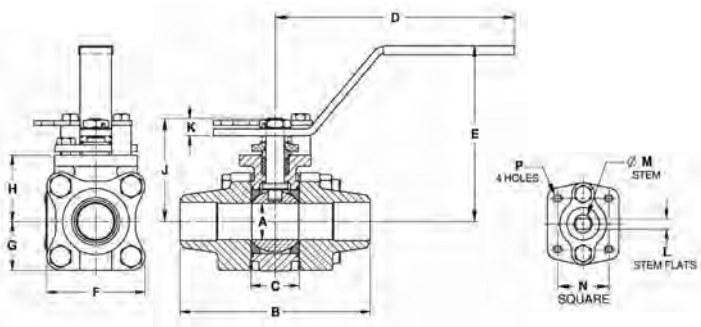

VARIATIONS AVAILABLE

- 83A-340 Schedule 5 Butt-Weld
- 83A-440 Schedule 10 Butt-Weld
- 83A-540 Schedule 40 Butt-Weld

OPTIONS AVAILABLE

(MORE INFORMATION IN SECTION J)

- Minimum quantities apply
- To specify an option, replace the "01" standard suffix with the suffix of the option.
- To specify multiple options, replace the "01" suffix with the desired suffixes in the numerical order shown below. NOTE: Not all suffixes can be combined together.

(SUFFIX)	OPTION	SIZES
-01	Standard Configuration	All
-04-	2-1/4" Stem Extension (Carbon Steel, Zinc Plated)	All
-14-	Vented Ball	All
-15-	Stainless Steel Locking Round Handle	All
-49-	No Lubrication. Assembled Dry	All
-60-	Static Grounding	All
-62-	Center Section Only	All
-66-	FNPT x Buttweld	All
-67-	Cleaned for Industrial Gases	All
-69-	Drilled & Tapped Purge & Drains	All
-70-	4" Extended Bonnet	All
-76-	Live Loaded (Lever Operated)	All
-77-	Live Loaded (Actuated)	All
-90-	Double Packed 4" Extended Bonnet	All
-9P-	Double Packed 4" Extended Bonnet w/ Monitoring Port	All
-EF-	Graphite Packing (API 641 Compliant)	3/4" to 2"
-KF-	PCTFE Stem Bearing	All
-SR-	Spring Return Handle	1/2" to 1"
-UA-	AIS (American Iron & Steel) Compliant	All
-ZP1-	Fugitive Emissions Packing (Viton)	All
-ZP2-	Fugitive Emissions Packing (Buna-N)	All
-ZP3-	Fugitive Emissions Packing (Kalrez)	All

Pressure/Temperature Ratings - Page M-19, Graph No. 23

STANDARD MATERIAL LIST

	PART	MATERIAL
1	Body	ASTM A216-WCB
2	End Caps	ASTM A216-WCB
3	Ball	ASTM A276-316SS
4	Stem	ASTM A276-316SS
5	Seat	Multi-Seal
6	Packing	PTFE
7	Stem Bearing	PEEK/PTFE
8	Body Gasket	RPTFE
9	Body Bolts	18-8 Stainless Steel
10	Body Nuts	18-8 Stainless Steel
11	Stop Bolts	18-8 Stainless Steel
12	Gland Bolts	18-8 Stainless Steel
13	Handle Nut/Screw	300 Series Stainless Steel
14	Packing Gland	ASTM A276-316SS
15	Gland Plate	300 Series Stainless Steel
16	Lever Handle	300 Series Stainless Steel
17	Lock Plate	300 Series Stainless Steel
18	Stops	300 Series Stainless Steel

DIMENSIONS

PART NO.	SIZE	A	B	C	D	E	F	G	H	J	K	L	M	N	P	WT.
83A-643-01	1/2"	0.50	3.80	0.89	5.12	3.02	2.02	1.01	1.39	1.97	0.23	0.245	0.375	1.00	10-24	2.3
83A-644-01	3/4"	0.75	4.66	1.10	5.53	3.40	2.40	1.20	1.65	2.35	0.24	0.312	0.500	1.392	1/4-20	4.0
83A-645-01	1"	1.00	5.19	1.31	6.53	4.80	2.67	1.34	1.80	2.80	0.48	0.287	0.500	1.392	1/4-20	5.7
83A-647-01	1-1/2"	1.50	5.96	1.97	6.65	4.70	3.84	1.92	2.49	3.89	0.72	0.412	0.625	1.949	5/16-18	14.4
83A-648-01	2"	2.00	6.84	2.56	8.40	5.47	4.56	2.46	3.17	4.74	0.80	0.477	0.750	1.949	5/16-18	24.4

REV. 17SEP19

aalberts integrated piping systems

83B-140 SERIES

CARBON STEEL 3-PIECE FULL PORT
CLASS 600 NPT BALL VALVE

5 YEAR WARRANTY MADE IN USA

STANDARD COMPLIANCE

- Valve Design: ASME B16.34 Class 600, NACE MR0175 (2000) & MR0103 (2012), API 608
- End Connections: NPT per ASME B1.20.1
- Valve Marking: MSS SP-25
- Production Testing: ASME B16.34

FEATURES

- 3-piece construction w/ enclosed fasteners
- Two-position locking
- Full port
- Adjustable multi-piece PTFE "V" style packing
- Stainless steel trim & hardware
- Fully machined ISO 5211 mounting
- Cast bosses on the center-section and end caps for bleed & drain ports
- Fire safe to API 607 (requires -24 suffix)
- Swing-out center section
- Pressure balanced solid ball
- Compression controlled spiral wound gaskets
- Vacuum service to 29 in of Hg.
- Anti-blowout one piece bottom entry stem
- CE Marking, 1-1/4" and larger (add "-CE" suffix)
- Statically grounded ball, stem, & body
- 250 psig saturated steam
- CGA 3.16-M88 (2014)

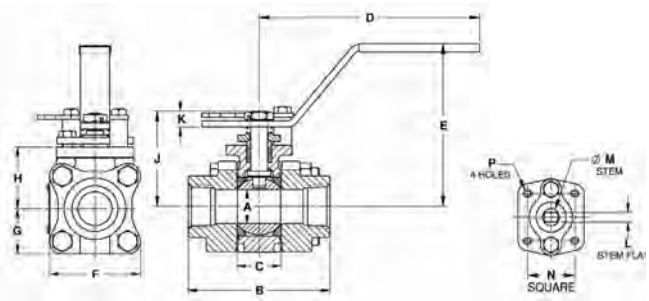

OPTIONS AVAILABLE

(MORE INFORMATION IN SECTION J)

- Minimum quantities apply
- To specify an option, replace the "01" standard suffix with the suffix of the option.
- To specify multiple options, replace the "01" suffix with the desired suffixes in the numerical order shown below. NOTE: Not all suffixes can be combined together.

(SUFFIX)	OPTION	SIZES
-01	Standard Configuration	All
-P -01-	BSPP (Parallel) Thread Connection	All
-T -01-	BSPT (Tapered) Thread Connection	All
-04-	2-1/4" Stem Extension (Carbon Steel, Zinc Plated)	All
-14-	Vented Ball	All
-15-	Stainless Steel Locking Round Handle	All
-21-	UHMWPE Seats w/ Graphite Seals	All
-24-	Graphite Packing, Spiral Wound Graphite Body Seal, PTFE/PEEK Bearing (Fire Safe API 607, 5th Edition, ISO 10497-5:2004)	All
-26-	Chlorine Service. Vented. Special Cleaning. Assembled Dry. (for CS, HC, & Monel only)	All
-38-	Peek Seats, Graphite Stem Packing & Gaskets	All
-49-	No Lubrication. Assembled Dry	All
-62-	Center Section Only	All
-63-	NPT x Socketweld	All
-67-	Cleaned for Industrial Gases	All
-69-	Drilled & Tapped Purge & Drains	All
-70-	4" Extended Bonnet	All
-76-	Live Loaded (Lever Operated)	All
-77-	Live Loaded (Actuated)	All
-90-	Double Packed 4" Extended Bonnet	All
-9P-	Double Packed 4" Extended Bonnet w/ Monitoring Port	All
-CE-	CE Marking	1-1/4" to 2"
-EF-	Graphite Packing (API 641 Compliant)	3/4" to 2"
-EP-	Garlock EVSP Stem Packing w/ Spiral Wound Graphite Gasket (Fire Safe by Design)	All
-KF-	PCTFE Stem Bearing	All
-SR-	Spring Return Handle	1/4" to 1"
-UA-	AIS (American Iron & Steel) Compliant	All
-UL-	UL Listed	All
-ZP1-	Fugitive Emissions Packing (Viton)	All
-ZP2-	Fugitive Emissions Packing (Buna-N)	All
-ZP3-	Fugitive Emissions Packing (Kalrez)	All

STANDARD MATERIAL LIST

	PART	MATERIAL
1	Body	ASTM A216-WCB
2	End Caps	ASTM A216-WCB
3	Ball	ASTM A276-316SS
4	Stem	ASTM A276-316SS ASTM A564 17-4PH (2" with -38 suffix)
5	Seat	Multi-Seal
6	Packing	PTFE
7	Stem Bearing	PEEK/PTFE
8	Body Gasket	PTFE Spiral Wound
9	Body Bolts	ASTM A193-Gr.B8M3
10	Body Nuts	ASTM A194-Gr.8
11	Stop Bolts	18-8 Stainless Steel
12	Gland Bolts	ASTM A193-Gr.B8
13	Handle Nut/Screw	300 Series Stainless Steel
14	Packing Gland	ASTM A276-316SS
15	Gland Plate	300 Series Stainless Steel
16	Lever Handle	300 Series Stainless Steel
17	Lock Plate	300 Series Stainless Steel
18	Stops	300 Series Stainless Steel
19	Internal Grounding Spring	300 Series Stainless Steel
20	External Grounding Spring	300 Series Stainless Steel

Pressure/Temperature Ratings - Page M-20, Graph No. 25

DIMENSIONS

PART NO.	SIZE	A	B	C	D	E	F	G	H	J	K	L	M	N	P	WT.
83B-141-01	1/4"	0.37	2.80	0.89	5.12	3.02	2.02	1.01	1.39	1.97	0.23	0.245	0.375	1.00	10-24	2.3
83B-142-01	3/8"	0.50	2.80	0.89	5.12	3.02	2.02	1.01	1.39	1.97	0.23	0.245	0.375	1.00	10-24	2.3
83B-143-01	1/2"	0.50	2.80	0.89	5.12	3.02	2.02	1.01	1.39	1.97	0.23	0.245	0.375	1.00	10-24	2.3
83B-144-01	3/4"	0.75	3.68	1.10	5.53	3.40	2.40	1.20	1.65	2.35	0.24	0.312	0.500	1.392	1/4-20	4.0
83B-145-01	1"	1.00	4.19	1.31	6.53	4.80	2.67	1.34	1.80	2.80	0.48	0.287	0.500	1.392	1/4-20	5.7
83B-146-01	1-1/4"	1.50	4.50	1.97	6.65	4.70	3.84	1.92	2.49	3.89	0.72	0.412	0.625	1.949	5/16-18	14.2
83B-147-01	1-1/2"	1.50	4.98	1.97	6.65	4.70	3.84	1.92	2.49	3.89	0.72	0.412	0.625	1.949	5/16-18	14.4
83B-148-01	2"	2.00	5.86	2.56	8.40	5.47	4.56	2.46	3.17	4.74	0.80	0.477	0.750	1.949	5/16-18	24.4

REV. 17SEP19

83B-240 SERIES

CARBON STEEL 3-PIECE FULL PORT
CLASS 600 SOCKET WELD BALL VALVE

5 YEAR WARRANTY MADE IN USA

STANDARD COMPLIANCE

- Valve Design: ASME B16.34 Class 600, NACE MR0175 (2000) & MR0103 (2012), API 608
- End Connections: Socket-weld per ASME B16.11
- Valve Marking: ASME B16.34
- Production Testing: ASME B16.34

FEATURES

- 3-piece construction w/ enclosed fasteners
- Full port
- Stainless steel trim & hardware
- Swing-out center section
- Pressure balanced solid ball
- Compression controlled spiral wound gaskets
- Anti-blowout one piece bottom entry stem
- Statically grounded ball, stem, & body
- Two-position locking
- Adjustable multi-piece PTFE "V" style packing
- Fully machined ISO 5211 mounting
- Cast bosses on the center-section and end caps for bleed & drain ports
- Fire safe to API 607 (requires -24 suffix)
- Vacuum service to 29 in of Hg.
- CE Marking, 1-1/4" and larger (add "-CE" suffix)
- 250 psig saturated steam
- CGA 3.16-M88 (2014)

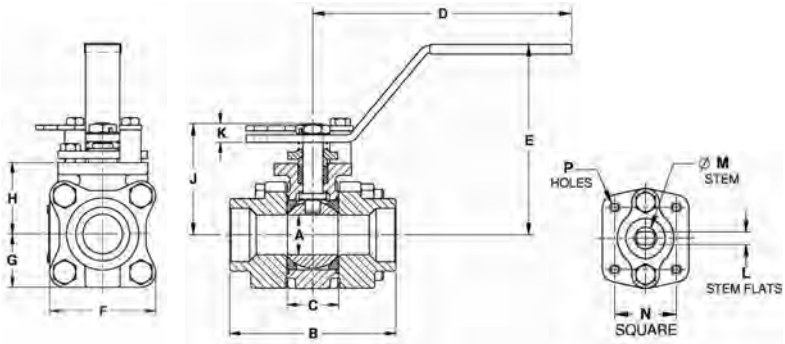

STANDARD MATERIAL LIST

	PART	MATERIAL
1	Body	ASTM A216-WCB
2	End Caps	ASTM A216-WCB
3	Ball	ASTM A276-316SS
4	Stem	ASTM A276-316SS ASTM A564 17-4PH (2" with -38 suffix)
5	Seat	Multi-Seal
6	Packing	PTFE
7	Stem Bearing	PEEK/PTFE
8	Body Gasket	PTFE Spiral Wound
9	Body Bolts	ASTM A193-Gr.B8M3
10	Body Nuts	ASTM A194-Gr.8
11	Stop Bolts	18-8 Stainless Steel
12	Gland Bolts	ASTM A193-Gr.B8
13	Handle Nut/Screw	300 Series Stainless Steel
14	Packing Gland	ASTM A276-316SS
15	Gland Plate	300 Series Stainless Steel
16	Lever Handle	300 Series Stainless Steel
17	Lock Plate	300 Series Stainless Steel
18	Stops	300 Series Stainless Steel
19	Internal Grounding Spring	300 Series Stainless Steel
20	External Grounding Spring	300 Series Stainless Steel

Pressure/Temperature Ratings - M-20, Graph No. 25

OPTIONS AVAILABLE

(MORE INFORMATION IN SECTION J)

- Minimum quantities apply
- To specify an option, replace the "01" standard suffix with the suffix of the option.
- To specify multiple options, replace the "01" suffix with the desired suffixes in the numerical order shown below. NOTE: Not all suffixes can be combined together.

(SUFFIX)	OPTION	SIZES
-01	Standard Configuration	All
-04-	2-1/4" Stem Extension (Carbon Steel, Zinc Plated)	All
-14-	Vented Ball	All
-15-	Stainless Steel Locking Round Handle	All
-21-	UHMWPE Seats w/ Graphite Seals	All
-24-	Graphite Packing, Spiral Wound Graphite Body Seal, PTFE/PEEK Bearing (Fire Safe API 607, 5th Edition, ISO 10497-5:2004)	All
-26-	Chlorine Service. Vented. Special Cleaning. Assembled Dry. (for CS, HC, & Monel only)	All
-38-	Peek Seats, Graphite Stem Packing & Gaskets	All
-49-	No Lubrication. Assembled Dry	All
-62-	Center Section Only	All
-67-	Cleaned for Industrial Gases	All
-69-	Drilled & Tapped Purge & Drains	All
-70-	4" Extended Bonnet	All
-76-	Live Loaded (Lever Operated)	All
-77-	Live Loaded (Actuated)	All
-90-	Double Packed 4" Extended Bonnet	All
-9P-	Double Packed 4" Extended Bonnet w/ Monitoring Port	All
-CE-	CE Marking	1-1/4" to 1"
-EF-	Graphite Packing (API 641 Compliant)	3/4" to 2"
-EP-	Garlock EVSP Stem Packing w/ Spiral Wound Graphite Gasket (Fire Safe by Design)	All
-KF-	PCTFE Stem Bearing	All
-SR-	Spring Return Handle	1/4" to 1"
-UA-	AIS (American Iron & Steel) Compliant	All
-UL-	UL Listed	All
-ZP1-	Fugitive Emissions Packing (Viton)	All
-ZP2-	Fugitive Emissions Packing (Buna-N)	All
-ZP3-	Fugitive Emissions Packing (Kalrez)	All

DIMENSIONS

PART NO.	SIZE	A	B	C	D	E	F	G	H	J	K	L	M	N	P	WT.
83B-241-01	1/4"	0.37	2.80	0.89	5.12	3.02	2.02	1.01	1.39	1.97	0.23	0.245	0.375	1.00	10-24	2.3
83B-242-01	3/8"	0.50	2.80	0.89	5.12	3.02	2.02	1.01	1.39	1.97	0.23	0.245	0.375	1.00	10-24	2.3
83B-243-01	1/2"	0.50	2.80	0.89	5.12	3.02	2.02	1.01	1.39	1.97	0.23	0.245	0.375	1.00	10-24	2.3
83B-244-01	3/4"	0.75	3.68	1.10	5.53	3.40	2.40	1.20	1.65	2.35	0.24	0.312	0.500	1.392	1/4-20	4.0
83B-245-01	1"	1.00	4.19	1.31	6.53	4.80	2.67	1.34	1.80	2.80	0.48	0.287	0.500	1.392	1/4-20	5.7
83B-246-01	1-1/4"	1.50	4.50	1.97	6.65	4.70	3.84	1.92	2.49	3.89	0.72	0.412	0.625	1.949	5/16-18	14.2
83B-247-01	1-1/2"	1.50	4.98	1.97	6.65	4.70	3.84	1.92	2.49	3.89	0.72	0.412	0.625	1.949	5/16-18	14.4
83B-248-01	2"	2.00	5.86	2.56	8.40	5.47	4.56	2.46	3.17	4.74	0.80	0.477	0.750	1.949	5/16-18	24.4

REV. 17SEP19

aalberts integrated piping systems

83B-340 SERIES

CARBON STEEL 3-PIECE FULL PORT
CLASS 600 SCH. 5 BUTT WELD BALL VALVE

5 YEAR WARRANTY MADE IN USA

STANDARD COMPLIANCE

- Valve Design: ASME B16.34 Class 600, NACE MR0175 (2000) & MR0103 (2012), API 608
- End Connections: Butt-Weld per ASME B16.25
- Valve Marking: ASME B16.34
- Production Testing: ASME B16.34

FEATURES

- 3-piece construction w/ enclosed fasteners
- Full port
- Stainless steel trim & hardware
- Swing-out center section
- Pressure balanced solid ball
- Compression controlled spiral wound gaskets
- Anti-blowout one piece bottom entry stem
- Statically grounded ball, stem, & body
- Two-position locking
- Adjustable multi-piece PTFE "V" style packing
- Fully machined ISO 5211 mounting
- Cast bosses on the center-section and end caps for bleed & drain ports
- Fire safe to API 607 (requires -24 suffix)
- Vacuum service to 29 in of Hg.
- CE Marking, 1-1/2" and larger (add "-CE" suffix)
- •250 psig saturated steam
- CGA 3.16-M88 (2014)

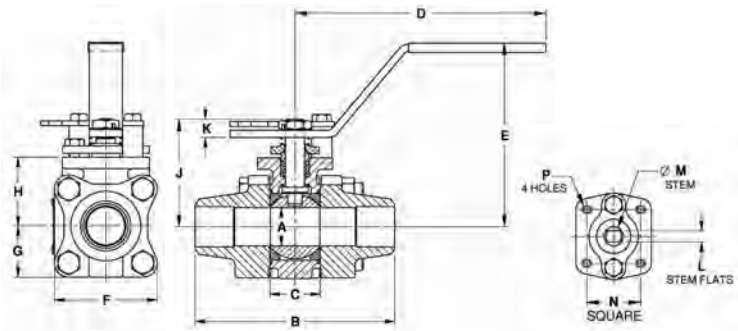

VARIATIONS AVAILABLE

- 83B-440 Schedule 10 Butt-Weld
- 83B-540 Schedule 40 Butt-Weld
- 83B-640 Schedule 80 Butt-Weld

OPTIONS AVAILABLE

(MORE INFORMATION IN SECTION J)

- Minimum quantities apply
- To specify an option, replace the "01" standard suffix with the suffix of the option.
- To specify multiple options, replace the "01" suffix with the desired suffixes in the numerical order shown below. NOTE: Not all suffixes can be combined together.

(SUFFIX)	OPTION	SIZES
-01	Standard Configuration	All
-04-	2-1/4" Stem Extension (Carbon Steel, Zinc Plated)	All
-14-	Vented Ball	All
-15-	Stainless Steel Locking Round Handle	All
-21-	UHMWPE Seats w/ Graphite Seals	All
-24-	Graphite Packing, Spiral Wound Graphite Body Seal, PTFE/PEEK Bearing (Fire Safe API 607, 5th Edition, ISO 10497-5:2004)	All
-26-	Chlorine Service. Vented. Special Cleaning. Assembled Dry. (for CS, HC, & Monel only)	All
-38-	Peek Seats, Graphite Stem Packing & Gaskets	All
-49-	No Lubrication. Assembled Dry	All
-62-	Center Section Only	All
-66-	FNPT x Buttweld	All
-67-	Cleaned for Industrial Gases	All
-69-	Drilled & Tapped Purge & Drains	All
-70-	4" Extended Bonnet	All
-76-	Live Loaded (Lever Operated)	All
-77-	Live Loaded (Actuated)	All
-90-	Double Packed 4" Extended Bonnet	All
-9P-	Double Packed 4" Extended Bonnet w/ Monitoring Port	All
-CE-	CE Marking	1-1/2" to 2"
-EF-	Graphite Packing (API 641 Compliant)	3/4" to 2"
-EP-	Garlock EVSP Stem Packing w/ Spiral Wound Graphite Gasket (Fire Safe by Design)	All
-KF-	PCTFE Stem Bearing	All
-SR-	Spring Return Handle	1/2" to 1"
-UA-	AIS (American Iron & Steel) Compliant	All
-UL-	UL Listed	All
-ZP1-	Fugitive Emissions Packing (Viton)	All
-ZP2-	Fugitive Emissions Packing (Buna-N)	All
-ZP3-	Fugitive Emissions Packing (Kalrez)	All

STANDARD MATERIAL LIST

	PART	MATERIAL
1	Body	ASTM A216-WCB
2	End Caps	ASTM A216-WCB
3	Ball	ASTM A276-316SS
4	Stem	ASTM A276-316SS` ASTM A564 17-4PH (2" with -38 suffix)
5	Seat	Multi-Seal
6	Packing	PTFE
7	Stem Bearing	PEEK/PTFE
8	Body Gasket	PTFE Spiral Wound
9	Body Bolts	ASTM A193-Gr.B8M3
10	Body Nuts	ASTM A194-Gr.8
11	Stop Bolts	18-8 Stainless Steel
12	Gland Bolts	ASTM A193-Gr.B8
13	Handle Nut/Screw	300 Series Stainless Steel
14	Packing Gland	ASTM A276-316SS
15	Gland Plate	300 Series Stainless Steel
16	Lever Handle	300 Series Stainless Steel
17	Lock Plate	300 Series Stainless Steel
18	Stops	300 Series Stainless Steel
19	Internal Grounding Spring	300 Series Stainless Steel
20	External Grounding Spring	300 Series Stainless Steel

Pressure/Temperature Ratings - Page M-19, Graph No. 23

DIMENSIONS

PART NO.	SIZE	A	B	C	D	E	F	G	H	J	K	L	M	N	P	WT.
83B-343-01	1/2"	0.50	3.80	0.89	5.12	3.02	2.02	1.01	1.39	1.97	0.23	0.245	0.375	1.00	10-24	2.3
83B-344-01	3/4"	0.75	4.66	1.10	5.53	3.40	2.40	1.20	1.65	2.35	0.24	0.312	0.500	1.392	1/4-20	4.0
83B-345-01	1"	1.00	5.19	1.31	6.53	4.80	2.67	1.34	1.80	2.80	0.48	0.287	0.500	1.392	1/4-20	5.7
83B-347-01	1-1/2"	1.50	5.96	1.97	6.65	4.70	3.84	1.92	2.49	3.89	0.72	0.412	0.625	1.949	5/16-18	14.4
83B-348-01	2"	2.00	6.84	2.56	8.40	5.47	4.56	2.46	3.17	4.74	0.80	0.477	0.750	1.949	5/16-18	24.4

REV. 17SEP19

83B-440 SERIES

CARBON STEEL 3-PIECE FULL PORT
CLASS 600 SCH. 10 BUTT WELD BALL VALVE

5 YEAR WARRANTY MADE IN USA

STANDARD COMPLIANCE

- Valve Design: ASME B16.34 Class 600, NACE MR0175 (2000) & MR0103 (2012), API 608
- End Connections: Butt-Weld per ASME B16.25
- Valve Marking: ASME B16.34
- Production Testing: ASME B16.34

FEATURES

- 3-piece construction w/ enclosed fasteners
- Two-position locking
- Full port
- Adjustable multi-piece PTFE "V" style packing
- Stainless steel trim & hardware
- Fully machined ISO 5211 mounting
- Swing-out center section
- Cast bosses on the center-section and end caps for bleed & drain ports
- Fire safe to API 607 (requires -24 suffix)
- Pressure balanced solid ball
- Compression controlled spiral wound gaskets
- Vacuum service to 29 in of Hg.
- Anti-blowout one piece bottom entry stem
- CE Marking, 1-1/2" and larger (add "-CE" suffix)
- Statically grounded ball, stem, & body
- 250 psig saturated steam
- CGA 3.16-M88 (2014)

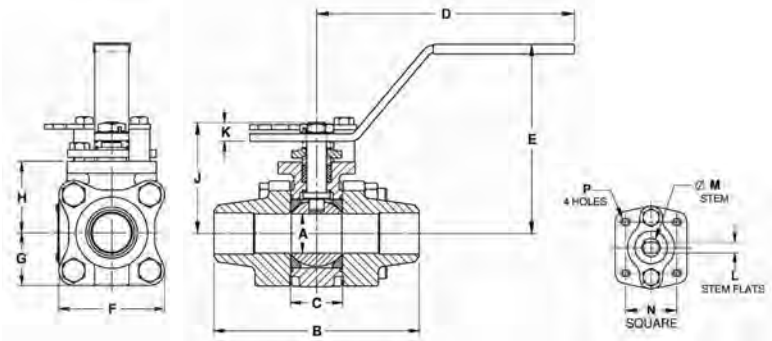

VARIATIONS AVAILABLE

- 83B-340 Schedule 5 Butt-Weld
- 83B-540 Schedule 40 Butt-Weld
- 83B-640 Schedule 80 Butt-Weld

OPTIONS AVAILABLE

(MORE INFORMATION IN SECTION J)

- Minimum quantities apply
- To specify an option, replace the "01" standard suffix with the suffix of the option.
- To specify multiple options, replace the "01" suffix with the desired suffixes in the numerical order shown below. NOTE: Not all suffixes can be combined together.

(SUFFIX)	OPTION	SIZES
-01	Standard Configuration	All
-04-	2-1/4" Stem Extension (Carbon Steel, Zinc Plated)	All
-14-	Vented Ball	All
-15-	Stainless Steel Locking Round Handle	All
-21-	UHMWPE Seats w/ Graphite Seals	All
-24-	Graphite Packing, Spiral Wound Graphite Body Seal, PTFE/PEEK Bearing (Fire Safe API 607, 5th Edition, ISO 10497-5:2004)	All
-26-	Chlorine Service. Vented. Special Cleaning. Assembled Dry. (for CS, HC, & Monel only)	All
-38-	Peek Seats, Graphite Stem Packing & Gaskets	All
-49-	No Lubrication. Assembled Dry	All
-62-	Center Section Only	All
-66-	FNPT x Buttweld	All
-67-	Cleaned for Industrial Gases	All
-69-	Drilled & Tapped Purge & Drains	All
-70-	4" Extended Bonnet	All
-76-	Live Loaded (Lever Operated)	All
-77-	Live Loaded (Actuated)	All
-90-	Double Packed 4" Extended Bonnet	All
-9P-	Double Packed 4" Extended Bonnet w/ Monitoring Port	All
-CE-	CE Marking	1-1/2" to 2"
-EF-	Graphite Packing (API 641 Compliant)	3/4" to 2"
-EP-	Garlock EVSP Stem Packing w/ Spiral Wound Graphite Gasket (Fire Safe by Design)	All
-KF-	PCTFE Stem Bearing	All
-SR-	Spring Return Handle	1/2" to 1"
-UA-	AIS (American Iron & Steel) Compliant	All
-UL-	UL Listed	All
-ZP1-	Fugitive Emissions Packing (Viton)	All
-ZP2-	Fugitive Emissions Packing (Buna-N)	All
-ZP3-	Fugitive Emissions Packing (Kalrez)	All

STANDARD MATERIAL LIST

	PART	MATERIAL
1	Body	ASTM A216-WCB
2	End Caps	ASTM A216-WCB
3	Ball	ASTM A276-316SS
4	Stem	ASTM A276-316SS ASTM A564 17-4PH (2" with -38 suffix)
5	Seat	Multi-Seal
6	Packing	PTFE
7	Stem Bearing	PEEK/PTFE
8	Body Gasket	PTFE Spiral Wound
9	Body Bolts	ASTM A193-Gr.B8M3
10	Body Nuts	ASTM A194-Gr.8
11	Stop Bolts	18-8 Stainless Steel
12	Gland Bolts	ASTM A193-Gr.B8
13	Handle Nut/Screw	300 Series Stainless Steel
14	Packing Gland	ASTM A276-316SS
15	Gland Plate	300 Series Stainless Steel
16	Lever Handle	300 Series Stainless Steel
17	Lock Plate	300 Series Stainless Steel
18	Stops	300 Series Stainless Steel
19	Internal Grounding Spring	300 Series Stainless Steel
20	External Grounding Spring	300 Series Stainless Steel

Pressure/Temperature Ratings - Page M-20, Graph No. 25

DIMENSIONS

PART NO.	SIZE	A	B	C	D	E	F	G	H	J	K	L	M	N	P	WT.
83B-443-01	1/2"	0.50	3.80	0.89	5.12	3.02	2.02	1.01	1.39	1.97	0.23	0.245	0.375	1.00	10-24	2.3
83B-444-01	3/4"	0.75	4.66	1.10	5.53	3.40	2.40	1.20	1.65	2.35	0.24	0.312	0.500	1.392	1/4-20	4.0
83B-445-01	1"	1.00	5.19	1.31	6.53	4.80	2.67	1.34	1.80	2.80	0.48	0.287	0.500	1.392	1/4-20	5.7
83B-447-01	1-1/2"	1.50	5.96	1.97	6.65	4.70	3.84	1.92	2.49	3.89	0.72	0.412	0.625	1.949	5/16-18	14.4
83B-448-01	2"	2.00	6.84	2.56	8.40	5.47	4.56	2.46	3.17	4.74	0.80	0.477	0.750	1.949	5/16-18	24.4

REV. 17SEP19

aalberts integrated piping systems

83B-540 SERIES

CARBON STEEL 3-PIECE FULL PORT
CLASS 600 SCH. 40 BUTT WELD BALL VALVE

5 YEAR WARRANTY MADE IN USA

STANDARD COMPLIANCE

- Valve Design: ASME B16.34 Class 600, NACE MR0175 (2000) & MR0103 (2012), API 608
- End Connections: Butt-Weld per ASME B16.25
- Valve Marking: ASME B16.34
- Production Testing: ASME B16.34

FEATURES

- 3-piece construction w/ enclosed fasteners
- Full port
- Stainless steel trim & hardware
- Swing-out center section
- Pressure balanced solid ball
- Compression controlled spiral wound gaskets
- Anti-blowout one piece bottom entry stem
- Statically grounded ball, stem, & body
- Two-position locking
- Adjustable multi-piece PTFE "V" style packing
- Fully machined ISO 5211 mounting
- Cast bosses on the center-section and end caps for bleed & drain ports
- Fire safe to API 607 (requires -24 suffix)
- Vacuum service to 29 in of Hg.
- CE Marking, 1-1/2" and larger (add "-CE" suffix)
- 250 psig saturated steam
- CGA 3.16-M88 (2014)

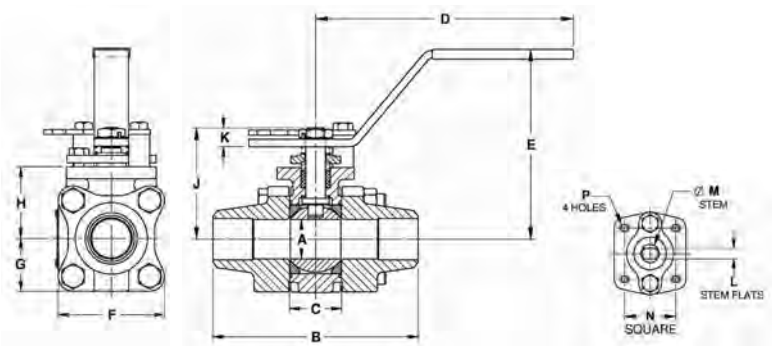

VARIATIONS AVAILABLE

- 83B-340 Schedule 5 Butt-Weld
- 83B-440 Schedule 10 Butt-Weld
- 83B-640 Schedule 80 Butt-Weld

OPTIONS AVAILABLE

(MORE INFORMATION IN SECTION J)

- Minimum quantities apply
- To specify an option, replace the "01" standard suffix with the suffix of the option.
- To specify multiple options, replace the "01" suffix with the desired suffixes in the numerical order shown below. NOTE: Not all suffixes can be combined together.

(SUFFIX)	OPTION	SIZES
-01	Standard Configuration	All
-04-	2-1/4" Stem Extension (Carbon Steel, Zinc Plated)	All
-14-	Vented Ball	All
-15-	Stainless Steel Locking Round Handle	All
-21-	UHMWPE Seats w/ Graphite Seals	All
-24-	Graphite Packing, Spiral Wound Graphite Body Seal, PTFE/PEEK Bearing (Fire Safe API 607, 5th Edition, ISO 10497-5:2004)	All
-26-	Chlorine Service. Vented. Special Cleaning. Assembled Dry. (for CS, HC, & Monel only)	All
-38-	Peek Seats, Graphite Stem Packing & Gaskets	All
-49-	No Lubrication. Assembled Dry	All
-62-	Center Section Only	All
-66-	FNPT x Buttweld	All
-67-	Cleaned for Industrial Gases	All
-69-	Drilled & Tapped Purge & Drains	All
-70-	4" Extended Bonnet	All
-76-	Live Loaded (Lever Operated)	All
-77-	Live Loaded (Actuated)	All
-90-	Double Packed 4" Extended Bonnet	All
-9P-	Double Packed 4" Extended Bonnet w/ Monitoring Port	All
-CE-	CE Marking	1-1/2" to 2"
-EF-	Graphite Packing (API 641 Compliant)	3/4" to 2"
-EP-	Garlock EVSP Stem Packing w/ Spiral Wound Graphite Gasket (Fire Safe by Design)	All
-KF-	PCTFE Stem Bearing	All
-SR-	Spring Return Handle	1/2" to 1"
-UA-	AIS (American Iron & Steel) Compliant	All
-UL-	UL Listed	All
-ZP1-	Fugitive Emissions Packing (Viton)	All
-ZP2-	Fugitive Emissions Packing (Buna-N)	All
-ZP3-	Fugitive Emissions Packing (Kalrez)	All

STANDARD MATERIAL LIST

	PART	MATERIAL
1	Body	ASTM A216-WCB
2	End Caps	ASTM A216-WCB
3	Ball	ASTM A276-316SS
4	Stem	ASTM A276-316SS ASTM A564 17-4PH (2" with -38 suffix)
5	Seat	Multi-Seal
6	Packing	PTFE
7	Stem Bearing	PEEK/PTFE
8	Body Gasket	PTFE Spiral Wound
9	Body Bolts	ASTM A193-Gr.B8M3
10	Body Nuts	ASTM A194-Gr.8
11	Stop Bolts	18-8 Stainless Steel
12	Gland Bolts	ASTM A193-Gr.B8
13	Handle Nut/Screw	300 Series Stainless Steel
14	Packing Gland	ASTM A276-316SS
15	Gland Plate	300 Series Stainless Steel
16	Lever Handle	300 Series Stainless Steel
17	Lock Plate	300 Series Stainless Steel
18	Stops	300 Series Stainless Steel
19	Internal Grounding Spring	300 Series Stainless Steel
20	External Grounding Spring	300 Series Stainless Steel

Pressure/Temperature Ratings - Page M-19, Graph No. 23

DIMENSIONS

PART NO.	SIZE	A	B	C	D	E	F	G	H	J	K	L	M	N	P	WT.
83B-543-01	1/2"	0.50	3.80	0.89	5.12	3.02	2.02	1.01	1.39	1.97	0.23	0.245	0.375	1.00	10-24	2.3
83B-544-01	3/4"	0.75	4.66	1.10	5.53	3.40	2.40	1.20	1.65	2.35	0.24	0.312	0.500	1.392	1/4-20	4.0
83B-545-01	1"	1.00	5.19	1.31	6.53	4.80	2.67	1.34	1.80	2.80	0.48	0.287	0.500	1.392	1/4-20	5.7
83B-547-01	1-1/2"	1.50	5.96	1.97	6.65	4.70	3.84	1.92	2.49	3.89	0.72	0.412	0.625	1.949	5/16-18	14.4
83B-548-01	2"	2.00	6.84	2.56	8.40	5.47	4.56	2.46	3.17	4.74	0.80	0.477	0.750	1.949	5/16-18	24.4

REV. 17SEP19

83B-640 SERIES

CARBON STEEL 3-PIECE FULL PORT
CLASS 600 SCH. 80 BUTT WELD BALL VALVE

5 YEAR WARRANTY MADE IN USA

STANDARD COMPLIANCE

- Valve Design: ASME B16.34 Class 600, NACE MR0175 (2000) & MR0103 (2012), API 608
- End Connections: Butt-Weld per ASME B16.25
- Valve Marking: ASME B16.34
- Production Testing: ASME B16.34

FEATURES

- 3-piece construction w/ enclosed fasteners
- Full port
- Stainless steel trim & hardware
- Swing-out center section
- Pressure balanced solid ball
- Compression controlled spiral wound gaskets
- Anti-blowout one piece bottom entry stem
- Statically grounded ball, stem, & body
- Two-position locking
- Adjustable multi-piece PTFE "V" style packing
- Fully machined ISO 5211 mounting
- Cast bosses on the center-section and end caps for bleed & drain ports
- Fire safe to API 607 (requires -24 suffix)
- Vacuum service to 29 in of Hg.
- CE Marking, 1-1/2" and larger (add "-CE" suffix)
- 250 psig saturated steam
- CGA 3.16-M88 (2014)

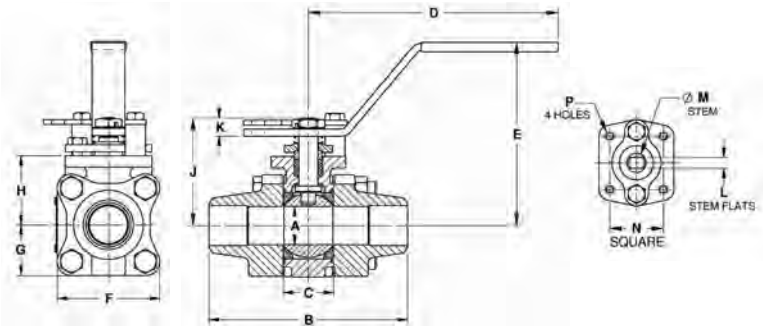

VARIATIONS AVAILABLE

- 83B-340 Schedule 5 Butt-Weld
- 83B-440 Schedule 10 Butt-Weld
- 83B-540 Schedule 40 Butt-Weld

OPTIONS AVAILABLE

(MORE INFORMATION IN SECTION J)

- Minimum quantities apply
- To specify an option, replace the "01" standard suffix with the suffix of the option.
- To specify multiple options, replace the "01" suffix with the desired suffixes in the numerical order shown below. NOTE: Not all suffixes can be combined together.

(SUFFIX)	OPTION	SIZES
-01	Standard Configuration	All
-04-	2-1/4" Stem Extension (Carbon Steel, Zinc Plated)	All
-14-	Vented Ball	All
-15-	Stainless Steel Locking Round Handle	All
-21-	UHMWPE Seats w/ Graphite Seals	All
-24-	Graphite Packing, Spiral Wound Graphite Body Seal, PTFE/PEEK Bearing (Fire Safe API 607, 5th Edition, ISO 10497-5:2004)	All
-26-	Chlorine Service. Vented. Special Cleaning. Assembled Dry. (for CS, HC, & Monel only)	All
-38-	Peek Seats, Graphite Stem Packing & Gaskets	All
-49-	No Lubrication. Assembled Dry	All
-62-	Center Section Only	All
-66-	FNPT x Buttweld	All
-67-	Cleaned for Industrial Gases	All
-69-	Drilled & Tapped Purge & Drains	All
-70-	4" Extended Bonnet	All
-76-	Live Loaded (Lever Operated)	All
-77-	Live Loaded (Actuated)	All
-90-	Double Packed 4" Extended Bonnet	All
-9P-	Double Packed 4" Extended Bonnet w/ Monitoring Port	All
-CE-	CE Marking	1-1/2" to 2"
-EF-	Graphite Packing (API 641 Compliant)	3/4" to 2"
-EP-	Garlock EVSP Stem Packing w/ Spiral Wound Graphite Gasket (Fire Safe by Design)	All
-KF-	PCTFE Stem Bearing	All
-SR-	Spring Return Handle	1/2" to 1"
-UA-	AIS (American Iron & Steel) Compliant	All
-UL-	UL Listed	All
-ZP1-	Fugitive Emissions Packing (Viton)	All
-ZP2-	Fugitive Emissions Packing (Buna-N)	All
-ZP3-	Fugitive Emissions Packing (Kalrez)	All

STANDARD MATERIAL LIST

	PART	MATERIAL
1	Body	ASTM A216-WCB
2	End Caps	ASTM A216-WCB
3	Ball	ASTM A276-316SS
4	Stem	ASTM A276-316SS ASTM A564 17-4PH (2" with -38 suffix)
5	Seat	Multi-Seal
6	Packing	PTFE
7	Stem Bearing	PEEK/PTFE
8	Body Gasket	PTFE Spiral Wound
9	Body Bolts	ASTM A193-Gr.B8M3
10	Body Nuts	ASTM A194-Gr.8
11	Stop Bolts	18-8 Stainless Steel
12	Gland Bolts	ASTM A193-Gr.B8
13	Handle Nut/Screw	300 Series Stainless Steel
14	Packing Gland	ASTM A276-316SS
15	Gland Plate	300 Series Stainless Steel
16	Lever Handle	300 Series Stainless Steel
17	Lock Plate	300 Series Stainless Steel
18	Stops	300 Series Stainless Steel
19	Internal Grounding Spring	300 Series Stainless Steel
20	External Grounding Spring	300 Series Stainless Steel

Pressure/Temperature Ratings - Page M-20, Graph No. 25

DIMENSIONS

PART NO.	SIZE	A	B	C	D	E	F	G	H	J	K	L	M	N	P	WT.
83B-643-01	1/2"	0.50	3.80	0.89	5.12	3.02	2.02	1.01	1.39	1.97	0.23	0.245	0.375	1.00	10-24	2.3
83B-644-01	3/4"	0.75	4.66	1.10	5.53	3.40	2.40	1.20	1.65	2.35	0.24	0.312	0.500	1.392	1/4-20	4.0
83B-645-01	1"	1.00	5.19	1.31	6.53	4.80	2.67	1.34	1.80	2.80	0.48	0.287	0.500	1.392	1/4-20	5.7
83B-647-01	1-1/2"	1.50	5.96	1.97	6.65	4.70	3.84	1.92	2.49	3.89	0.72	0.412	0.625	1.949	5/16-18	14.4
83B-648-01	2"	2.00	6.84	2.56	8.40	5.47	4.56	2.46	3.17	4.74	0.80	0.477	0.750	1.949	5/16-18	24.4

REV. 17SEP19

aalberts integrated piping systems

83L-140 SERIES

CARBON STEEL 3-PIECE FULL PORT LOW TEMP.
CLASS 600 NPT BALL VALVE

5 YEAR WARRANTY MADE IN USA

STANDARD COMPLIANCE

- Valve Design: ASME B16.34 Class 600, NACE MR0175 (2000) & MR0103 (2012), API 608
- End Connections: NPT per ASME B1.20.1
- Valve Marking: ASME B16.34
- Production Testing: ASME B16.34

FEATURES

- 3-piece construction w/ enclosed fasteners
- Full port
- Stainless steel trim & hardware
- Swing-out center section
- Pressure balanced solid ball
- Compression controlled spiral wound gaskets
- Anti-blowout one piece bottom entry stem
- Statically grounded ball, stem, & body
- Rated to -50°F (-46°C)
- Two-position locking
- Adjustable multi-piece PTFE "V" style packing
- Fully machined ISO 5211 mounting
- Cast bosses on the center-section and end caps for bleed & drain ports
- Fire safe to API 607 (requires -24 suffix)
- Vacuum service to 29 in of Hg.
- CE Marking, 1-1/4" and larger (add "-CE" suffix)
- 250 psig saturated steam

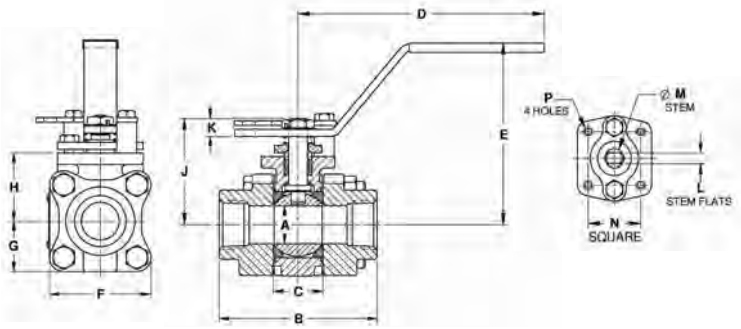

STANDARD MATERIAL LIST

	PART	MATERIAL
1	Body	ASTM A352-LCC
2	End Caps	ASTM A352-LCC
3	Ball	ASTM A276-316SS
4	Stem	ASTM A276-316SS ASTM A564 17-4PH (2" with -38 suffix)
5	Seat	Multi-Seal
6	Packing	PTFE
7	Stem Bearing	PEEK/PTFE
8	Body Gasket	PTFE Spiral Wound
9	Body Bolts	ASTM A193-Gr.B8M3
10	Body Nuts	ASTM A194-Gr.8
11	Stop Bolts	18-8 Stainless Steel
12	Gland Bolts	ASTM A193-Gr.B8
13	Handle Nut/Screw	300 Series Stainless Steel
14	Packing Gland	ASTM A276-316SS
15	Gland Plate	300 Series Stainless Steel
16	Lever Handle	300 Series Stainless Steel
17	Lock Plate	300 Series Stainless Steel
18	Stops	300 Series Stainless Steel
19	Internal Grounding Spring	300 Series Stainless Steel
20	External Grounding Spring	300 Series Stainless Steel

Pressure/Temperature Ratings - Page M-24, Graph No. 33

OPTIONS AVAILABLE

(MORE INFORMATION IN SECTION J)

- Minimum quantities apply
- To specify an option, replace the "01" standard suffix with the suffix of the option.
- To specify multiple options, replace the "01" suffix with the desired suffixes in the numerical order shown below. NOTE: Not all suffixes can be combined together.

(SUFFIX)	OPTION	SIZES
-01	Standard Configuration	All
-P -01-	BSPP (Parallel) Thread Connection	All
-T -01-	BSPT (Tapered) Thread Connection	All
-04-	2-1/4" Stem Extension (Carbon Steel, Zinc Plated)	All
-14-	Vented Ball	All
-15-	Stainless Steel Locking Round Handle	All
-21-	UHMWPE Seats w/ Graphite Seals	All
-24-	Graphite Packing, Spiral Wound Graphite Body Seal, PTFE/PEEK Bearing (Fire Safe API 607, 5th Edition, ISO 10497-5:2004)	All
-26-	Chlorine Service. Vented. Special Cleaning. Assembled Dry. (for CS, HC, & Monel only)	All
-38-	Peek Seats, Graphite Stem Packing & Gaskets	All
-49-	No Lubrication. Assembled Dry	All
-62-	Center Section Only	All
-63-	NPT x Socketweld	All
-67-	Cleaned for Industrial Gases	All
-69-	Drilled & Tapped Purge & Drains	All
-70-	4" Extended Bonnet	All
-76-	Live Loaded (Lever Operated)	All
-77-	Live Loaded (Actuated)	All
-90-	Double Packed 4" Extended Bonnet	All
-9P-	Double Packed 4" Extended Bonnet w/ Monitoring Port	All
-CE-	CE Marking	1-1/2" to 2"
-EF-	Graphite Packing (API 641 Compliant)	3/4" to 2"
-EP-	Garlock EVSP Stem Packing w/ Spiral Wound Graphite Gasket (Fire Safe by Design)	All
-KF-	PCTFE Stem Bearing	All
-SR-	Spring Return Handle	1/4" to 1"
-UL-	UL Listed	All
-ZP1-	Fugitive Emissions Packing (Viton)	All
-ZP2-	Fugitive Emissions Packing (Buna-N)	All
-ZP3-	Fugitive Emissions Packing (Kalrez)	All

DIMENSIONS

PART NO.	SIZE	A	B	C	D	E	F	G	H	J	K	L	M	N	P	WT.
83L-141-01	1/4"	0.37	2.80	0.89	5.12	3.02	2.02	1.01	1.39	1.97	0.23	0.245	0.375	1.00	10-24	2.3
83L-142-01	3/8"	0.50	2.80	0.89	5.12	3.02	2.02	1.01	1.39	1.97	0.23	0.245	0.375	1.00	10-24	2.3
83L-143-01	1/2"	0.50	2.80	0.89	5.12	3.02	2.02	1.01	1.39	1.97	0.23	0.245	0.375	1.00	10-24	2.3
83L-144-01	3/4"	0.75	3.68	1.10	5.53	3.40	2.40	1.20	1.65	2.35	0.24	0.312	0.500	1.392	1/4-20	4.0
83L-145-01	1"	1.00	4.19	1.31	6.53	4.80	2.67	1.34	1.80	2.80	0.48	0.287	0.500	1.392	1/4-20	5.7
83L-146-01	1-1/4"	1.50	4.50	1.97	6.65	4.70	3.84	1.92	2.49	3.89	0.72	0.412	0.625	1.949	5/16-18	14.2
83L-147-01	1-1/2"	1.50	4.98	1.97	6.65	4.70	3.84	1.92	2.49	3.89	0.72	0.412	0.625	1.949	5/16-18	14.4
83L-148-01	2"	2.00	5.86	2.56	8.40	5.47	4.56	2.46	3.17	4.74	0.80	0.477	0.750	1.949	5/16-18	24.4

REV. 17SEP19

83L-240 SERIES

CARBON STEEL 3-PIECE FULL PORT LOW TEMP.
CLASS 600 SOCKET WELD BALL VALVE

5 YEAR WARRANTY MADE IN USA

STANDARD COMPLIANCE

- Valve Design: ASME B16.34 Class 600, NACE MR0175 (2000) & MR0103 (2012), API 608
- End Connections: Socket-weld per ASME B16.11
- Valve Marking: ASME B16.34
- Production Testing: ASME B16.34

FEATURES

- 3-piece construction w/ enclosed fasteners
- Full port
- Stainless steel trim & hardware
- Swing-out center section
- Pressure balanced solid ball
- Compression controlled spiral wound gaskets
- Anti-blowout one piece bottom entry stem
- Statically grounded ball, stem, & body
- Rated to -50°F (-46°C)
- Two-position locking
- Adjustable multi-piece PTFE "V" style packing
- Fully machined ISO 5211 mounting
- Cast bosses on the center-section and end caps for bleed & drain ports
- Fire safe to API 607 (requires -24 suffix)
- Vacuum service to 29 in of Hg.
- CE Marking, 1-1/4" and larger (add "-CE" suffix)
- 250 psig saturated steam

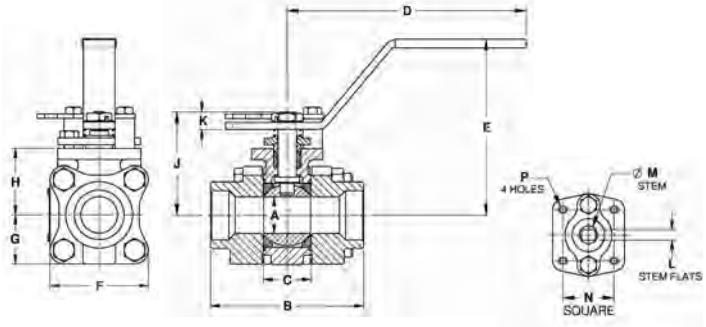

STANDARD MATERIAL LIST

	PART	MATERIAL
1	Body	ASTM A352-LCC
2	End Caps	ASTM A352-LCC
3	Ball	ASTM A276-316SS
4	Stem	ASTM A276-316SS ASTM A564 17-4PH (2" with -38 suffix)
5	Seat	Multi-Seal
6	Packing	PTFE
7	Stem Bearing	PEEK/PTFE
8	Body Gasket	PTFE Spiral Wound
9	Body Bolts	ASTM A193-Gr.B8M3
10	Body Nuts	ASTM A194-Gr.8
11	Stop Bolts	18-8 Stainless Steel
12	Gland Bolts	ASTM A193-Gr.B8
13	Handle Nut/Screw	300 Series Stainless Steel
14	Packing Gland	ASTM A276-316SS
15	Gland Plate	300 Series Stainless Steel
16	Lever Handle	300 Series Stainless Steel
17	Lock Plate	300 Series Stainless Steel
18	Stops	300 Series Stainless Steel
19	Internal Grounding Spring	300 Series Stainless Steel
20	External Grounding Spring	300 Series Stainless Steel

Pressure/Temperature Ratings - Page M-24, Graph No. 33

OPTIONS AVAILABLE

(MORE INFORMATION IN SECTION J)

- Minimum quantities apply
- To specify an option, replace the "01" standard suffix with the suffix of the option.
- To specify multiple options, replace the "01" suffix with the desired suffixes in the numerical order shown below. NOTE: Not all suffixes can be combined together.

(SUFFIX)	OPTION	SIZES
-01	Standard Configuration	All
-04-	2-1/4" Stem Extension (Carbon Steel, Zinc Plated)	All
-14-	Vented Ball	All
-15-	Stainless Steel Locking Round Handle	All
-21-	UHMWPE Seats w/ Graphite Seals	All
-24-	Graphite Packing, Spiral Wound Graphite Body Seal, PTFE/PEEK Bearing (Fire Safe API 607, 5th Edition, ISO 10497-5:2004)	All
-26-	Chlorine Service. Vented. Special Cleaning. Assembled Dry. (for CS, HC, & Monel only)	All
-38-	Peek Seats, Graphite Stem Packing & Gaskets	All
-49-	No Lubrication. Assembled Dry	All
-62-	Center Section Only	All
-67-	Cleaned for Industrial Gases	All
-69-	Drilled & Tapped Purge & Drains	All
-70-	4" Extended Bonnet	All
-76-	Live Loaded (Lever Operated)	All
-77-	Live Loaded (Actuated)	All
-90-	Double Packed 4" Extended Bonnet	All
-9P-	Double Packed 4" Extended Bonnet w/ Monitoring Port	All
-CE-	CE Marking	1-1/4" to 1"
-EF-	Graphite Packing (API 641 Compliant)	3/4" to 2"
-EP-	Garlock EVSP Stem Packing w/ Spiral Wound Graphite Gasket (Fire Safe by Design)	All
-KF-	PCTFE Stem Bearing	All
-SR-	Spring Return Handle	1/4" to 1"
-UL-	UL Listed	All
-ZP1-	Fugitive Emissions Packing (Viton)	All
-ZP2-	Fugitive Emissions Packing (Buna-N)	All
-ZP3-	Fugitive Emissions Packing (Kalrez)	All

DIMENSIONS

PART NO.	SIZE	A	B	C	D	E	F	G	H	J	K	L	M	N	P	WT.
83L-241-01	1/4"	0.37	2.80	0.89	5.12	3.02	2.02	1.01	1.39	1.97	0.23	0.245	0.375	1.00	10-24	2.3
83L-242-01	3/8"	0.50	2.80	0.89	5.12	3.02	2.02	1.01	1.39	1.97	0.23	0.245	0.375	1.00	10-24	2.3
83L-243-01	1/2"	0.50	2.80	0.89	5.12	3.02	2.02	1.01	1.39	1.97	0.23	0.245	0.375	1.00	10-24	2.3
83L-244-01	3/4"	0.75	3.68	1.10	5.53	3.40	2.40	1.20	1.65	2.35	0.24	0.312	0.500	1.392	1/4-20	4.0
83L-245-01	1"	1.00	4.19	1.31	6.53	4.80	2.67	1.34	1.80	2.80	0.48	0.287	0.500	1.392	1/4-20	5.7
83L-246-01	1-1/4"	1.50	4.50	1.97	6.65	4.70	3.84	1.92	2.49	3.89	0.72	0.412	0.625	1.949	5/16-18	14.2
83L-247-01	1-1/2"	1.50	4.98	1.97	6.65	4.70	3.84	1.92	2.49	3.89	0.72	0.412	0.625	1.949	5/16-18	14.4
83L-248-01	2"	2.00	5.86	2.56	8.40	5.47	4.56	2.46	3.17	4.74	0.80	0.477	0.750	1.949	5/16-18	24.4

REV. 17SEP19

aalberts integrated piping systems

83L-340 SERIES

CARBON STEEL 3-PIECE FULL PORT LOW TEMP.
CLASS 600 SCH. 5 BUTT WELD BALL VALVE

5 YEAR WARRANTY MADE IN USA

STANDARD COMPLIANCE

- Valve Design: ASME B16.34 Class 600, NACE MR0175 (2000) & MR0103 (2012), API 608
- End Connections: Butt-Weld per ASME B16.25
- Valve Marking: ASME B16.34
- Production Testing: ASME B16.34

FEATURES

- 3-piece construction w/ enclosed fasteners
- Full port
- Stainless steel trim & hardware
- Swing-out center section
- Pressure balanced solid ball
- Compression controlled spiral wound gaskets
- Anti-blowout one piece bottom entry stem
- Statically grounded ball, stem, & body
- Rated to -50°F (-46°C)
- 250 psig saturated steam
- CE Marking, 1-1/2" and larger (add "-CE" suffix)
- Two-position locking
- Adjustable multi-piece PTFE "V" style packing
- Fully machined ISO 5211 mounting
- Cast bosses on the center-section and end caps for bleed & drain ports
- Fire safe to API 607 (requires -24 suffix)
- Vacuum service to 29 in of Hg.

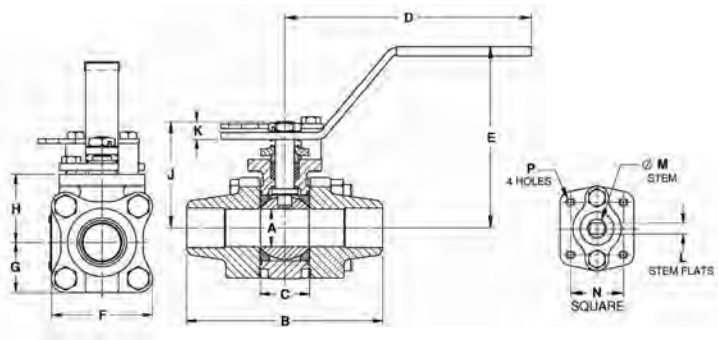

VARIATIONS AVAILABLE

- 83L-440 Schedule 10 Butt-Weld
- 83L-540 Schedule 40 Butt-Weld
- 83L-640 Schedule 80 Butt-Weld

OPTIONS AVAILABLE

(MORE INFORMATION IN SECTION J)

- Minimum quantities apply
- To specify an option, replace the "01" standard suffix with the suffix of the option.
- To specify multiple options, replace the "01" suffix with the desired suffixes in the numerical order shown below. NOTE: Not all suffixes can be combined together.

(SUFFIX)	OPTION	SIZES
-01	Standard Configuration	All
-04-	2-1/4" Stem Extension (Carbon Steel, Zinc Plated)	All
-14-	Vented Ball	All
-15-	Stainless Steel Locking Round Handle	All
-21-	UHMWPE Seats w/ Graphite Seals	All
-24-	Graphite Packing, Spiral Wound Graphite Body Seal, PTFE/PEEK Bearing (Fire Safe API 607, 5th Edition, ISO 10497-5:2004)	All
-26-	Chlorine Service. Vented. Special Cleaning. Assembled Dry. (for CS, HC, & Monel only)	All
-38-	Peek Seats, Graphite Stem Packing & Gaskets	All
-49-	No Lubrication. Assembled Dry	All
-62-	Center Section Only	All
-66-	FNPT x Buttweld	All
-67-	Cleaned for Industrial Gases	All
-69-	Drilled & Tapped Purge & Drains	All
-70-	4" Extended Bonnet	All
-76-	Live Loaded (Lever Operated)	All
-77-	Live Loaded (Actuated)	All
-90-	Double Packed 4" Extended Bonnet	All
-9P-	Double Packed 4" Extended Bonnet w/ Monitoring Port	All
-CE-	CE Marking	1-1/2" to 2"
-EF-	Graphite Packing (API 641 Compliant)	3/4" to 2"
-EP-	Garlock EVSP Stem Packing w/ Spiral Wound Graphite Gasket (Fire Safe by Design)	All
-KF-	PCTFE Stem Bearing	All
-SR-	Spring Return Handle	1/2" to 1"
-UL-	UL Listed	All
-ZP1-	Fugitive Emissions Packing (Viton)	All
-ZP2-	Fugitive Emissions Packing (Buna-N)	All
-ZP3-	Fugitive Emissions Packing (Kalrez)	All

STANDARD MATERIAL LIST

	PART	MATERIAL
1	Body	ASTM A352-LCC
2	End Caps	ASTM A352-LCC
3	Ball	ASTM A276-316SS
4	Stem	ASTM A276-316SS ASTM A564 17-4PH (2" with -38 suffix)
5	Seat	Multi-Seal
6	Packing	PTFE
7	Stem Bearing	PEEK/PTFE
8	Body Gasket	PTFE Spiral Wound
9	Body Bolts	ASTM A193-Gr.B8M3
10	Body Nuts	ASTM A194-Gr.8
11	Stop Bolts	18-8 Stainless Steel
12	Gland Bolts	ASTM A193-Gr.B8
13	Handle Nut/Screw	300 Series Stainless Steel
14	Packing Gland	ASTM A276-316SS
15	Gland Plate	300 Series Stainless Steel
16	Lever Handle	300 Series Stainless Steel
17	Lock Plate	300 Series Stainless Steel
18	Stops	300 Series Stainless Steel
19	Internal Grounding Spring	300 Series Stainless Steel
20	External Grounding Spring	300 Series Stainless Steel

Pressure/Temperature Ratings - Page M-24, Graph No. 33

DIMENSIONS

PART NO.	SIZE	A	B	C	D	E	F	G	H	J	K	L	M	N	P	WT.
83L-343-01	1/2"	0.50	3.80	0.89	5.12	3.02	2.02	1.01	1.39	1.97	0.23	0.245	0.375	1.00	10-24	2.3
83L-344-01	3/4"	0.75	4.66	1.10	5.53	3.40	2.40	1.20	1.65	2.35	0.24	0.312	0.500	1.392	1/4-20	4.0
83L-345-01	1"	1.00	5.19	1.31	6.53	4.80	2.67	1.34	1.80	2.80	0.48	0.287	0.500	1.392	1/4-20	5.7
83L-347-01	1-1/2"	1.50	5.96	1.97	6.65	4.70	3.84	1.92	2.49	3.89	0.72	0.412	0.625	1.949	5/16-18	14.4
83L-348-01	2"	2.00	6.84	2.56	8.40	5.47	4.56	2.46	3.17	4.74	0.80	0.477	0.750	1.949	5/16-18	24.4

REV. 17SEP19

83L-440 SERIES

CARBON STEEL 3-PIECE FULL PORT LOW TEMP.
CLASS 600 SCH. 10 BUTT WELD BALL VALVE

5 YEAR WARRANTY MADE IN USA

STANDARD COMPLIANCE

- Valve Design: ASME B16.34 Class 600, NACE MR0175 (2000) & MR0103 (2012), API 608
- End Connections: Butt-Weld per ASME B16.25
- Valve Marking: ASME B16.34
- Production Testing: ASME B16.34

FEATURES

- 3-piece construction w/ enclosed fasteners
- Full port
- Stainless steel trim & hardware
- Swing-out center section
- Pressure balanced solid ball
- Compression controlled spiral wound gaskets
- Anti-blowout one piece bottom entry stem
- Statically grounded ball, stem, & body
- Rated to -50°F (-46°C)
- Two-position locking
- Adjustable multi-piece PTFE "V" style packing
- Fully machined ISO 5211 mounting
- Cast bosses on the center-section and end caps for bleed & drain ports
- Fire safe to API 607 (requires -24 suffix)
- Vacuum service to 29 in of Hg.
- CE Marking, 1-1/2" and larger (add "-CE" suffix)
- 250 psig saturated steam

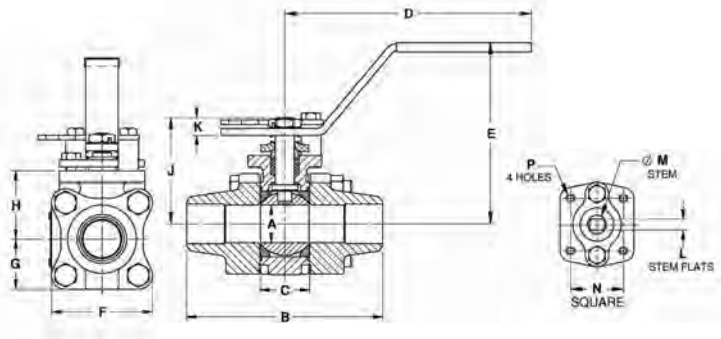

VARIATIONS AVAILABLE

- 83L-340 Schedule 5 Butt-Weld
- 83L-540 Schedule 40 Butt-Weld
- 83L-640 Schedule 80 Butt-Weld

OPTIONS AVAILABLE

(MORE INFORMATION IN SECTION J)

- Minimum quantities apply
- To specify an option, replace the "01" standard suffix with the suffix of the option.
- To specify multiple options, replace the "01" suffix with the desired suffixes in the numerical order shown below. NOTE: Not all suffixes can be combined together.

(SUFFIX)	OPTION	SIZES
-01	Standard Configuration	All
-04-	2-1/4" Stem Extension (Carbon Steel, Zinc Plated)	All
-14-	Vented Ball	All
-15-	Stainless Steel Locking Round Handle	All
-21-	UHMWPE Seats w/ Graphite Seals	All
-24-	Graphite Packing, Spiral Wound Graphite Body Seal, PTFE/PEEK Bearing (Fire Safe API 607, 5th Edition, ISO 10497-5:2004)	All
-26-	Chlorine Service. Vented. Special Cleaning. Assembled Dry. (for CS, HC, & Monel only)	All
-38-	Peek Seats, Graphite Stem Packing & Gaskets	All
-49-	No Lubrication. Assembled Dry	All
-62-	Center Section Only	All
-66-	FNPT x Buttweld	All
-67-	Cleaned for Industrial Gases	All
-69-	Drilled & Tapped Purge & Drains	All
-70-	4" Extended Bonnet	All
-76-	Live Loaded (Lever Operated)	All
-77-	Live Loaded (Actuated)	All
-90-	Double Packed 4" Extended Bonnet	All
-9P-	Double Packed 4" Extended Bonnet w/ Monitoring Port	All
-CE-	CE Marking	1-1/2" to 2"
-EF-	Graphite Packing (API 641 Compliant)	3/4" to 2"
-EP-	Garlock EVSP Stem Packing w/ Spiral Wound Graphite Gasket (Fire Safe by Design)	All
-KF-	PCTFE Stem Bearing	All
-SR-	Spring Return Handle	1/2" to 1"
-UL-	UL Listed	All
-ZP1-	Fugitive Emissions Packing (Viton)	All
-ZP2-	Fugitive Emissions Packing (Buna-N)	All
-ZP3-	Fugitive Emissions Packing (Kalrez)	All

STANDARD MATERIAL LIST

	PART	MATERIAL
1	Body	ASTM A352-LCC
2	End Caps	ASTM A352-LCC
3	Ball	ASTM A276-316SS
4	Stem	ASTM A276-316SS ASTM A564 17-4PH (2" with -38 suffix)
5	Seat	Multi-Seal
6	Packing	PTFE
7	Stem Bearing	PEEK/PTFE
8	Body Gasket	PTFE Spiral Wound
9	Body Bolts	ASTM A193-Gr.B8M3
10	Body Nuts	ASTM A194-Gr.8
11	Stop Bolts	18-8 Stainless Steel
12	Gland Bolts	ASTM A193-Gr.B8
13	Handle Nut/Screw	300 Series Stainless Steel
14	Packing Gland	ASTM A276-316SS
15	Gland Plate	300 Series Stainless Steel
16	Lever Handle	300 Series Stainless Steel
17	Lock Plate	300 Series Stainless Steel
18	Stops	300 Series Stainless Steel
19	Internal Grounding Spring	300 Series Stainless Steel
20	External Grounding Spring	300 Series Stainless Steel

Pressure/Temperature Ratings - Page M-24, Graph No. 33

DIMENSIONS

PART NO.	SIZE	A	B	C	D	E	F	G	H	J	K	L	M	N	P	WT.
83L-443-01	1/2"	0.50	3.80	0.89	5.12	3.02	2.02	1.01	1.39	1.97	0.23	0.245	0.375	1.00	10-24	2.3
83L-444-01	3/4"	0.75	4.66	1.10	5.53	3.40	2.40	1.20	1.65	2.35	0.24	0.312	0.500	1.392	1/4-20	4.0
83L-445-01	1"	1.00	5.19	1.31	6.53	4.80	2.67	1.34	1.80	2.80	0.48	0.287	0.500	1.392	1/4-20	5.7
83L-447-01	1-1/2"	1.50	5.96	1.97	6.65	4.70	3.84	1.92	2.49	3.89	0.72	0.412	0.625	1.949	5/16-18	14.4
83L-448-01	2"	2.00	6.84	2.56	8.40	5.47	4.56	2.46	3.17	4.74	0.80	0.477	0.750	1.949	5/16-18	24.4

REV. 17SEP19

aalberts integrated piping systems

83L-540 SERIES

CARBON STEEL 3-PIECE FULL PORT LOW TEMP.
CLASS 600 SCH. 40 BUTT WELD BALL VALVE

5 YEAR WARRANTY MADE IN USA

STANDARD COMPLIANCE

- Valve Design: ASME B16.34 Class 600, NACE MR0175 (2000) & MR0103 (2012), API 608
- End Connections: Butt-Weld per ASME B16.25
- Valve Marking: ASME B16.34
- Production Testing: ASME B16.34

FEATURES

- 3-piece construction w/ enclosed fasteners
- Full port
- Stainless steel trim & hardware
- Swing-out center section
- Pressure balanced solid ball
- Compression controlled spiral wound gaskets
- Anti-blowout one piece bottom entry stem
- Statically grounded ball, stem, & body
- Rated to -50°F (-46°C)
- Two-position locking
- Adjustable multi-piece PTFE "V" style packing
- Fully machined ISO 5211 mounting
- Cast bosses on the center-section and end caps for bleed & drain ports
- Fire safe to API 607 (requires -24 suffix)
- Vacuum service to 29 in of Hg.
- CE Marking, 1-1/2" and larger (add "-CE" suffix)
- 250 psig saturated steam

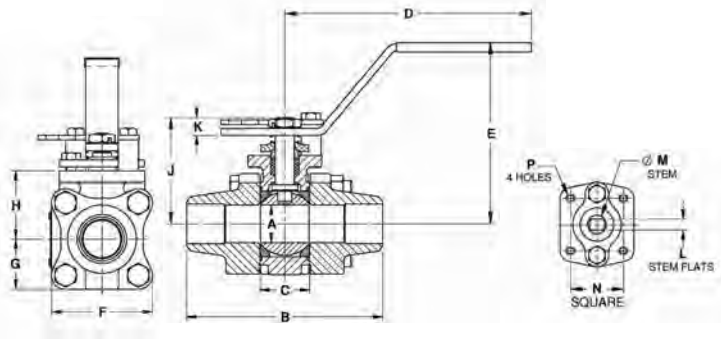

VARIATIONS AVAILABLE

- 83L-340 Schedule 5 Butt-Weld
- 83L-440 Schedule 10 Butt-Weld
- 83L-640 Schedule 80 Butt-Weld

OPTIONS AVAILABLE

(MORE INFORMATION IN SECTION J)

- Minimum quantities apply
- To specify an option, replace the "01" standard suffix with the suffix of the option.
- To specify multiple options, replace the "01" suffix with the desired suffixes in the numerical order shown below. NOTE: Not all suffixes can be combined together.

(SUFFIX)	OPTION	SIZES
-01	Standard Configuration	All
-04-	2-1/4" Stem Extension (Carbon Steel, Zinc Plated)	All
-14-	Vented Ball	All
-15-	Stainless Steel Locking Round Handle	All
-21-	UHMWPE Seats w/ Graphite Seals	All
-24-	Graphite Packing, Spiral Wound Graphite Body Seal, PTFE/PEEK Bearing (Fire Safe API 607, 5th Edition, ISO 10497-5:2004)	All
-26-	Chlorine Service. Vented. Special Cleaning. Assembled Dry. (for CS, HC, & Monel only)	All
-38-	Peek Seats, Graphite Stem Packing & Gaskets	All
-49-	No Lubrication. Assembled Dry	All
-62-	Center Section Only	All
-66-	FNPT x Buttweld	All
-67-	Cleaned for Industrial Gases	All
-69-	Drilled & Tapped Purge & Drains	All
-70-	4" Extended Bonnet	All
-76-	Live Loaded (Lever Operated)	All
-77-	Live Loaded (Actuated)	All
-90-	Double Packed 4" Extended Bonnet	All
-9P-	Double Packed 4" Extended Bonnet w/ Monitoring Port	All
-CE-	CE Marking	1-1/2" to 2"
-EF-	Graphite Packing (API 641 Compliant)	3/4" to 2"
-EP-	Garlock EVSP Stem Packing w/ Spiral Wound Graphite Gasket (Fire Safe by Design)	All
-KF-	PCTFE Stem Bearing	All
-SR-	Spring Return Handle	1/2" to 1"
-UL-	UL Listed	All
-ZP1-	Fugitive Emissions Packing (Viton)	All
-ZP2-	Fugitive Emissions Packing (Buna-N)	All
-ZP3-	Fugitive Emissions Packing (Kalrez)	All

STANDARD MATERIAL LIST

	PART	MATERIAL
1	Body	ASTM A352-LCC
2	End Caps	ASTM A352-LCC
3	Ball	ASTM A276-316SS
4	Stem	ASTM A276-316SS ASTM A564 17-4PH (2" with -38 suffix)
5	Seat	Multi-Seal
6	Packing	PTFE
7	Stem Bearing	PEEK/PTFE
8	Body Gasket	PTFE Spiral Wound
9	Body Bolts	ASTM A193-Gr.B8M3
10	Body Nuts	ASTM A194-Gr.8
11	Stop Bolts	18-8 Stainless Steel
12	Gland Bolts	ASTM A193-Gr.B8
13	Handle Nut/Screw	300 Series Stainless Steel
14	Packing Gland	ASTM A276-316SS
15	Gland Plate	300 Series Stainless Steel
16	Lever Handle	300 Series Stainless Steel
17	Lock Plate	300 Series Stainless Steel
18	Stops	300 Series Stainless Steel
19	Internal Grounding Spring	300 Series Stainless Steel
20	External Grounding Spring	300 Series Stainless Steel

Pressure/Temperature Ratings - Page M-24, Graph No. 33

DIMENSIONS

PART NO.	SIZE	A	B	C	D	E	F	G	H	J	K	L	M	N	P	WT.
83L-543-01	1/2"	0.50	3.80	0.89	5.12	3.02	2.02	1.01	1.39	1.97	0.23	0.245	0.375	1.00	10-24	2.3
83L-544-01	3/4"	0.75	4.66	1.10	5.53	3.40	2.40	1.20	1.65	2.35	0.24	0.312	0.500	1.392	1/4-20	4.0
83L-545-01	1"	1.00	5.19	1.31	6.53	4.80	2.67	1.34	1.80	2.80	0.48	0.287	0.500	1.392	1/4-20	5.7
83L-547-01	1-1/2"	1.50	5.96	1.97	6.65	4.70	3.84	1.92	2.49	3.89	0.72	0.412	0.625	1.949	5/16-18	14.4
83L-548-01	2"	2.00	6.84	2.56	8.40	5.47	4.56	2.46	3.17	4.74	0.80	0.477	0.750	1.949	5/16-18	24.4

REV. 17SEP19

83L-640 SERIES

CARBON STEEL 3-PIECE FULL PORT LOW TEMP.
CLASS 600 SCH. 80 BUTT WELD BALL VALVE

5 YEAR WARRANTY MADE IN USA

STANDARD COMPLIANCE

- Valve Design: ASME B16.34 Class 600, NACE MR0175 (2000) & MR0103 (2012), API 608
- End Connections: Butt-Weld per ASME B16.25
- Valve Marking: ASME B16.34
- Production Testing: ASME B16.34

FEATURES

- 3-piece construction w/ enclosed fasteners
- Full port
- Stainless steel trim & hardware
- Swing-out center section
- Pressure balanced solid ball
- Compression controlled spiral wound gaskets
- Anti-blowout one piece bottom entry stem
- Statically grounded ball, stem, & body
- Rated to -50°F (-46°C)
- Two-position locking
- Adjustable multi-piece PTFE "V" style packing
- Fully machined ISO 5211 mounting
- Cast bosses on the center-section and end caps for bleed & drain ports
- Fire safe to API 607 (requires -24 suffix)
- Vacuum service to 29 in of Hg.
- CE Marking, 1-1/2" and larger (add "-CE" suffix)
- 250 psig saturated steam

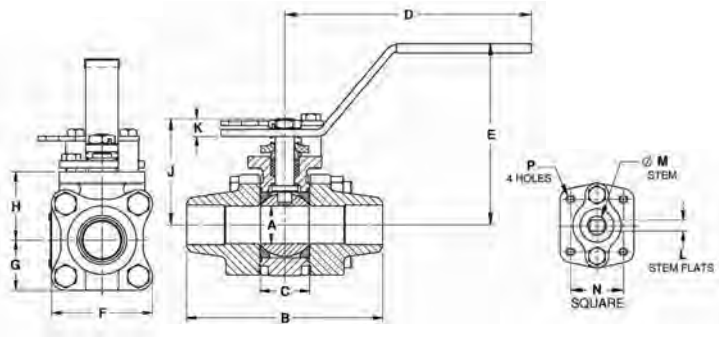

VARIATIONS AVAILABLE

- 83L-340 Schedule 5 Butt-Weld
- 83L-440 Schedule 10 Butt-Weld
- 83L-540 Schedule 40 Butt-Weld

OPTIONS AVAILABLE

(MORE INFORMATION IN SECTION J)

- Minimum quantities apply
- To specify an option, replace the "01" standard suffix with the suffix of the option.
- To specify multiple options, replace the "01" suffix with the desired suffixes in the numerical order shown below. NOTE: Not all suffixes can be combined together.

(SUFFIX)	OPTION	SIZES
-01	Standard Configuration	All
-04-	2-1/4" Stem Extension (Carbon Steel, Zinc Plated)	All
-14-	Vented Ball	All
-15-	Stainless Steel Locking Round Handle	All
-21-	UHMWPE Seats w/ Graphite Seals	All
-24-	Graphite Packing, Spiral Wound Graphite Body Seal, PTFE/PEEK Bearing (Fire Safe API 607, 5th Edition, ISO 10497-5:2004)	All
-26-	Chlorine Service. Vented. Special Cleaning. Assembled Dry. (for CS, HC, & Monel only)	All
-38-	Peek Seats, Graphite Stem Packing & Gaskets	All
-49-	No Lubrication. Assembled Dry	All
-62-	Center Section Only	All
-66-	FNPT x Buttweld	All
-67-	Cleaned for Industrial Gases	All
-69-	Drilled & Tapped Purge & Drains	All
-70-	4" Extended Bonnet	All
-76-	Live Loaded (Lever Operated)	All
-77-	Live Loaded (Actuated)	All
-90-	Double Packed 4" Extended Bonnet	All
-9P-	Double Packed 4" Extended Bonnet w/ Monitoring Port	All
-CE-	CE Marking	1-1/2" to 2"
-EF-	Graphite Packing (API 641 Compliant)	3/4" to 2"
-EP-	Garlock EVSP Stem Packing w/ Spiral Wound Graphite Gasket (Fire Safe by Design)	All
-KF-	PCTFE Stem Bearing	All
-SR-	Spring Return Handle	1/2" to 1"
-UL-	UL Listed	All
-EF-	Graphite Packing (API 641 Compliant)	All
-EF-	Graphite Packing (API 641 Compliant)	All
-EF-	Graphite Packing (API 641 Compliant)	All

STANDARD MATERIAL LIST

	PART	MATERIAL
1	Body	ASTM A352-LCC
2	End Caps	ASTM A352-LCC
3	Ball	ASTM A276-316SS
4	Stem	ASTM A276-316SS ASTM A564 17-4PH (2" with -38 suffix)
5	Seat	Multi-Seal
6	Packing	PTFE
7	Stem Bearing	PEEK/PTFE
8	Body Gasket	PTFE Spiral Wound
9	Body Bolts	ASTM A193-Gr.B8M3
10	Body Nuts	ASTM A194-Gr.8
11	Stop Bolts	18-8 Stainless Steel
12	Gland Bolts	ASTM A193-Gr.B8
13	Handle Nut/Screw	300 Series Stainless Steel
14	Packing Gland	ASTM A276-316SS
15	Gland Plate	300 Series Stainless Steel
16	Lever Handle	300 Series Stainless Steel
17	Lock Plate	300 Series Stainless Steel
18	Stops	300 Series Stainless Steel
19	Internal Grounding Spring	300 Series Stainless Steel
20	External Grounding Spring	300 Series Stainless Steel

Pressure/Temperature Ratings - Page M-24, Graph No. 33

DIMENSIONS

PART NO.	SIZE	A	B	C	D	E	F	G	H	J	K	L	M	N	P	WT.
83L-643-01	1/2"	0.50	3.80	0.89	5.12	3.02	2.02	1.01	1.39	1.97	0.23	0.245	0.375	1.00	10-24	2.3
83L-644-01	3/4"	0.75	4.66	1.10	5.53	3.40	2.40	1.20	1.65	2.35	0.24	0.312	0.500	1.392	1/4-20	4.0
83L-645-01	1"	1.00	5.19	1.31	6.53	4.80	2.67	1.34	1.80	2.80	0.48	0.287	0.500	1.392	1/4-20	5.7
83L-647-01	1-1/2"	1.50	5.96	1.97	6.65	4.70	3.84	1.92	2.49	3.89	0.72	0.412	0.625	1.949	5/16-18	14.4
83L-648-01	2"	2.00	6.84	2.56	8.40	5.47	4.56	2.46	3.17	4.74	0.80	0.477	0.750	1.949	5/16-18	24.4

REV. 17SEP19

aalberts integrated piping systems

86A-100 SERIES

STAINLESS STEEL 3-PIECE FULL PORT
1500 CWP NPT BALL VALVE

5 YEAR WARRANTY MADE IN USA

STANDARD COMPLIANCE

- Valve Design: MSS SP-110, NACE MR0175 (2000) & MR0103 (2012)
- End Connections: NPT per ASME B1.20.1
- Valve Marking: MSS SP-25
- Production Testing: MSS SP-110

FEATURES

- 3-piece construction w/ enclosed fasteners
- Full port
- Stainless steel trim & hardware
- Swing-out center section
- Pressure balanced solid ball
- Compression controlled RPTFE gaskets
- Anti-blowout one piece bottom entry stem
- Two-position locking
- Adjustable multi-piece PTFE "V" style packing
- Fully machined ISO 5211 mounting
- Cast bosses on the center-section and end caps for bleed & drain ports
- Vacuum service to 29 in of Hg.
- 150 psig saturated steam

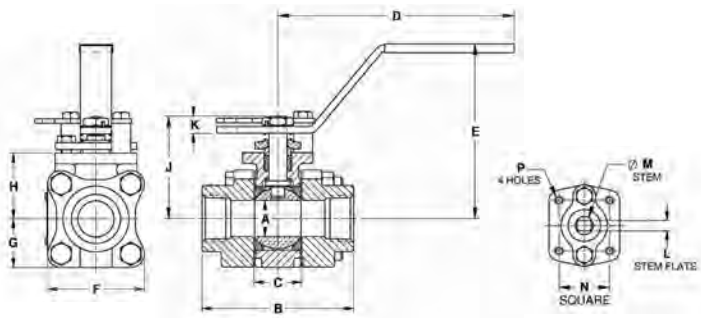

STANDARD MATERIAL LIST

	PART	MATERIAL
1	Body	ASTM A351-CF8M
2	End Caps	ASTM A351-CF3M
3	Ball	ASTM A276-316SS
4	Stem	ASTM A276-316SS
5	Seat	Multi-Seal
6	Packing	PTFE
7	Stem Bearing	PEEK/PTFE
8	Body Gasket	RPTFE
9	Body Bolts	18-8 Stainless Steel
10	Body Nuts	18-8 Stainless Steel
11	Stop Bolts	18-8 Stainless Steel
12	Gland Bolts	18-8 Stainless Steel
13	Handle Nut/Screw	300 Series Stainless Steel
14	Packing Gland	ASTM A276-316SS
15	Gland Plate	300 Series Stainless Steel
16	Lever Handle	300 Series Stainless Steel
17	Lock Plate	300 Series Stainless Steel
18	Stops	300 Series Stainless Steel

OPTIONS AVAILABLE

(MORE INFORMATION IN SECTION J)

- Minimum quantities apply
- To specify an option, replace the "01" standard suffix with the suffix of the option.
- To specify multiple options, replace the "01" suffix with the desired suffixes in the numerical order shown below. NOTE: Not all suffixes can be combined together.

(SUFFIX)	OPTION	SIZES
-01	Standard Configuration	All
-P -01-	BSPP (Parallel) Thread Connection	All
-T -01-	BSPT (Tapered) Thread Connection	All
-04-	2-1/4" Stem Extension (Carbon Steel, Zinc Plated)	All
-14-	Vented Ball	All
-15-	Stainless Steel Locking Round Handle	All
-49-	No Lubrication. Assembled Dry	All
-57-	Cleaned for Oxygen Service	All
-60-	Static Grounding	All
-62-	Center Section Only	All
-63-	NPT x Socketweld	All
-69-	Drilled & Tapped Purge & Drains	All
-70-	4" Extended Bonnet	All
-76-	Live Loaded (Lever Operated)	All
-77-	Live Loaded (Actuated)	All
-90-	Double Packed 4" Extended Bonnet	All
-9P-	Double Packed 4" Extended Bonnet w/ Monitoring Port	All
-EF-	Graphite Packing (API 641 Compliant)	3/4" to 2"
-KF-	PCTFE Stem Bearing	All
-SR-	Spring Return Handle	1/4" to 1"
-UA-	AIS (American Iron & Steel) Compliant	All
-ZP1-	Fugitive Emissions Packing (Viton)	All
-ZP2-	Fugitive Emissions Packing (Buna-N)	All
-ZP3-	Fugitive Emissions Packing (Kalrez)	All

Pressure/Temperature Ratings - Page M-19, Graph No. 24

DIMENSIONS

PART NO.	SIZE	A	B	C	D	E	F	G	H	J	K	L	M	N	P	WT.
86A-101-01	1/4"	0.37	2.80	0.89	5.12	3.02	2.02	1.01	1.39	1.97	0.23	0.245	0.375	1.00	10-24	2.3
86A-102-01	3/8"	0.50	2.80	0.89	5.12	3.02	2.02	1.01	1.39	1.97	0.23	0.245	0.375	1.00	10-24	2.3
86A-103-01	1/2"	0.50	2.80	0.89	5.12	3.02	2.02	1.01	1.39	1.97	0.23	0.245	0.375	1.00	10-24	2.3
86A-104-01	3/4"	0.75	3.68	1.10	5.53	3.40	2.40	1.20	1.65	2.35	0.24	0.312	0.500	1.392	1/4-20	4.0
86A-105-01	1"	1.00	4.19	1.31	6.53	4.80	2.67	1.34	1.80	2.80	0.48	0.287	0.500	1.392	1/4-20	5.7
86A-106-01	1-1/4"	1.50	4.50	1.97	6.65	4.70	3.84	1.92	2.49	3.89	0.72	0.412	0.625	1.949	5/16-18	14.2
86A-107-01	1-1/2"	1.50	4.98	1.97	6.65	4.70	3.84	1.92	2.49	3.89	0.72	0.412	0.625	1.949	5/16-18	14.4
86A-108-01	2"	2.00	5.86	2.56	8.40	5.47	4.56	2.46	3.17	4.74	0.80	0.477	0.750	1.949	5/16-18	24.4

REV. 17SEP19

86A-200 SERIES

STAINLESS STEEL 3-PIECE FULL PORT
1500 CWP SOCKET WELD BALL VALVE

5 YEAR WARRANTY MADE IN USA

STANDARD COMPLIANCE

- Valve Design: MSS SP-110, NACE MR0175 (2000) & MR0103 (2012)
- End Connections: Socket-weld per ASME B16.11
- Valve Marking: MSS SP-25
- Production Testing: MSS SP-110

FEATURES

- 3-piece construction w/ enclosed fasteners
- Full port
- Stainless steel trim & hardware
- Swing-out center section
- Pressure balanced solid ball
- Compression controlled RPTFE gaskets
- Anti-blowout one piece bottom entry stem
- Two-position locking
- Adjustable multi-piece PTFE "V" style packing
- Fully machined ISO 5211 mounting
- Cast bosses on the center-section and end caps for bleed & drain ports
- Vacuum service to 29 in of Hg.
- 150 psig saturated steam

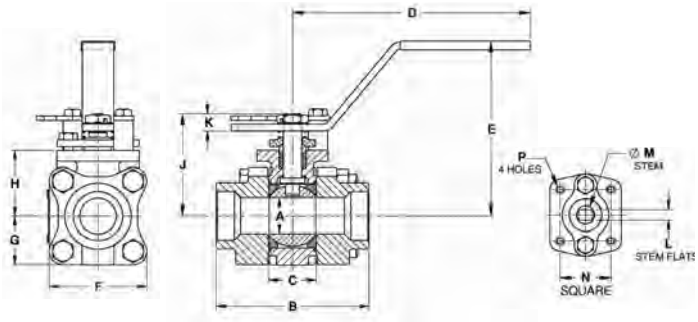

OPTIONS AVAILABLE

(MORE INFORMATION IN SECTION J)

- Minimum quantities apply
- To specify an option, replace the "01" standard suffix with the suffix of the option.
- To specify multiple options, replace the "01" suffix with the desired suffixes in the numerical order shown below. NOTE: Not all suffixes can be combined together.

(SUFFIX)	OPTION	SIZES
-01	Standard Configuration	All
-04-	2-1/4" Stem Extension (Carbon Steel, Zinc Plated)	All
-14-	Vented Ball	All
-15-	Stainless Steel Locking Round Handle	All
-49-	No Lubrication. Assembled Dry	All
-57-	Cleaned for Oxygen Service	All
-60-	Static Grounding	All
-62-	Center Section Only	All
-69-	Drilled & Tapped Purge & Drains	All
-70-	4" Extended Bonnet	All
-76-	Live Loaded (Lever Operated)	All
-77-	Live Loaded (Actuated)	All
-90-	Double Packed 4" Extended Bonnet	All
-9P-	Double Packed 4" Extended Bonnet w/ Monitoring Port	All
-EF-	Graphite Packing (API 641 Compliant)	3/4" to 2"
-KF-	PCTFE Stem Bearing	All
-SR-	Spring Return Handle	1/4" to 1"
-UA-	AIS (American Iron & Steel) Compliant	All
-ZP1-	Fugitive Emissions Packing (Viton)	All
-ZP2-	Fugitive Emissions Packing (Buna-N)	All
-ZP3-	Fugitive Emissions Packing (Kalrez)	All

Pressure/Temperature Ratings - Page M-19, Graph No. 24

STANDARD MATERIAL LIST

	PART	MATERIAL
1	Body	ASTM A351-CF8M
2	End Caps	ASTM A351-CF3M
3	Ball	ASTM A276-316SS
4	Stem	ASTM A276-316SS
5	Seat	Multi-Seal
6	Packing	PTFE
7	Stem Bearing	PEEK/PTFE
8	Body Gasket	RPTFE
9	Body Bolts	18-8 Stainless Steel
10	Body Nuts	18-8 Stainless Steel
11	Stop Bolts	18-8 Stainless Steel
12	Gland Bolts	18-8 Stainless Steel
13	Handle Nut/Screw	300 Series Stainless Steel
14	Packing Gland	ASTM A276-316SS
15	Gland Plate	300 Series Stainless Steel
16	Lever Handle	300 Series Stainless Steel
17	Lock Plate	300 Series Stainless Steel
18	Stops	300 Series Stainless Steel

DIMENSIONS

PART NO.	SIZE	A	B	C	D	E	F	G	H	J	K	L	M	N	P	WT.
86A-201-01	1/4"	0.37	2.80	0.89	5.12	3.02	2.02	1.01	1.39	1.97	0.23	0.245	0.375	1.00	10-24	2.3
86A-202-01	3/8"	0.50	2.80	0.89	5.12	3.02	2.02	1.01	1.39	1.97	0.23	0.245	0.375	1.00	10-24	2.3
86A-203-01	1/2"	0.50	2.80	0.89	5.12	3.02	2.02	1.01	1.39	1.97	0.23	0.245	0.375	1.00	10-24	2.3
86A-204-01	3/4"	0.75	3.68	1.10	5.53	3.40	2.40	1.20	1.65	2.35	0.24	0.312	0.500	1.392	1/4-20	4.0
86A-205-01	1"	1.00	4.19	1.31	6.53	4.80	2.67	1.34	1.80	2.80	0.48	0.287	0.500	1.392	1/4-20	5.7
86A-206-01	1-1/4"	1.50	4.50	1.97	6.65	4.70	3.84	1.92	2.49	3.89	0.72	0.412	0.625	1.949	5/16-18	14.2
86A-207-01	1-1/2"	1.50	4.98	1.97	6.65	4.70	3.84	1.92	2.49	3.89	0.72	0.412	0.625	1.949	5/16-18	14.4
86A-208-01	2"	2.00	5.86	2.56	8.40	5.47	4.56	2.46	3.17	4.74	0.80	0.477	0.750	1.949	5/16-18	24.4

REV. 17SEP19

aalberts integrated piping systems

86A-300 SERIES

STAINLESS STEEL 3-PIECE FULL PORT
1500 CWP SCH. 5 BUTT WELD BALL VALVE

5 YEAR WARRANTY MADE IN USA

STANDARD COMPLIANCE

- Valve Design: MSS SP-110, NACE MR0175 (2000) & MR0103 (2012)
- End Connections: Butt-Weld per ASME B16.25
- Valve Marking: MSS SP-25
- Production Testing: MSS SP-110

FEATURES

- 3-piece construction w/ enclosed fasteners
- Full port
- Stainless steel trim & hardware
- Swing-out center section
- Pressure balanced solid ball
- Compression controlled RPTFE gaskets
- Anti-blowout one piece bottom entry stem
- Two-position locking
- Adjustable multi-piece PTFE "V" style packing
- Fully machined ISO 5211 mounting
- Cast bosses on the center-section and end caps for bleed & drain ports
- Vacuum service to 29 in of Hg.
- 150 psig saturated steam

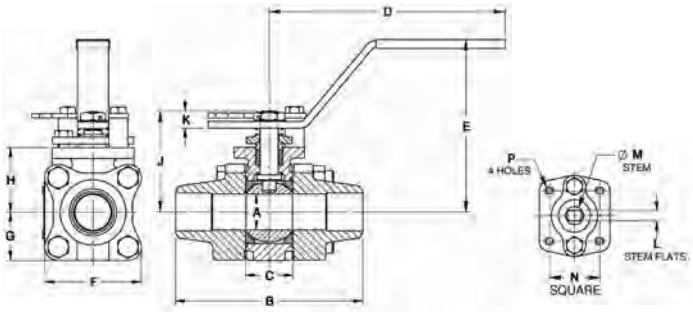

VARIATIONS AVAILABLE

- 86A-400 Schedule 10 Butt-Weld
- 86A-500 Schedule 40 Butt-Weld
- 86A-600 Schedule 80 Butt-Weld

OPTIONS AVAILABLE

(MORE INFORMATION IN SECTION J)

- Minimum quantities apply
- To specify an option, replace the "01" standard suffix with the suffix of the option.
- To specify multiple options, replace the "01" suffix with the desired suffixes in the numerical order shown below. NOTE: Not all suffixes can be combined together.

(SUFFIX)	OPTION	SIZES
-01	Standard Configuration	All
-04-	2-1/4" Stem Extension (Carbon Steel, Zinc Plated)	All
-14-	Vented Ball	All
-15-	Stainless Steel Locking Round Handle	All
-49-	No Lubrication. Assembled Dry	All
-57-	Cleaned for Oxygen Service	All
-60-	Static Grounding	All
-62-	Center Section Only	All
-66-	FNPT x Buttweld	All
-69-	Drilled & Tapped Purge & Drains	All
-70-	4" Extended Bonnet	All
-76-	Live Loaded (Lever Operated)	All
-77-	Live Loaded (Actuated)	All
-90-	Double Packed 4" Extended Bonnet	All
-9P-	Double Packed 4" Extended Bonnet w/ Monitoring Port	All
-EF-	Graphite Packing (API 641 Compliant)	3/4" to 2"
-KF-	PCTFE Stem Bearing	All
-SR-	Spring Return Handle	1/2" to 1"
-UA-	AIS (American Iron & Steel) Compliant	All
-ZP1-	Fugitive Emissions Packing (Viton)	All
-ZP2-	Fugitive Emissions Packing (Buna-N)	All
-ZP3-	Fugitive Emissions Packing (Kalrez)	All

Pressure/Temperature Ratings - Page M-19, Graph No. 24

STANDARD MATERIAL LIST

	PART	MATERIAL
1	Body	ASTM A351-CF8M
2	End Caps	ASTM A351-CF3M
3	Ball	ASTM A276-316SS
4	Stem	ASTM A276-316SS
5	Seat	Multi-Seal
6	Packing	PTFE
7	Stem Bearing	PEEK/PTFE
8	Body Gasket	RPTFE
9	Body Bolts	18-8 Stainless Steel
10	Body Nuts	18-8 Stainless Steel
11	Stop Bolts	18-8 Stainless Steel
12	Gland Bolts	18-8 Stainless Steel
13	Handle Nut/Screw	300 Series Stainless Steel
14	Packing Gland	ASTM A276-316SS
15	Gland Plate	300 Series Stainless Steel
16	Lever Handle	300 Series Stainless Steel
17	Lock Plate	300 Series Stainless Steel
18	Stops	300 Series Stainless Steel

DIMENSIONS

PART NO.	SIZE	A	B	C	D	E	F	G	H	J	K	L	M	N	P	WT.
86A-303-01	1/2"	0.50	3.80	0.89	5.12	3.02	2.02	1.01	1.39	1.97	0.23	0.245	0.375	1.00	10-24	2.3
86A-304-01	3/4"	0.75	4.66	1.10	5.53	3.40	2.40	1.20	1.65	2.35	0.24	0.312	0.500	1.392	1/4-20	4.0
86A-305-01	1"	1.00	5.19	1.31	6.53	4.80	2.67	1.34	1.80	2.80	0.48	0.287	0.500	1.392	1/4-20	5.7
86A-307-01	1-1/2"	1.50	5.96	1.97	6.65	4.70	3.84	1.92	2.49	3.89	0.72	0.412	0.625	1.949	5/16-18	14.4
86A-308-01	2"	2.00	6.84	2.56	8.40	5.47	4.56	2.46	3.17	4.74	0.80	0.477	0.750	1.949	5/16-18	24.4

REV. 17SEP19

86A-400 SERIES

STAINLESS STEEL 3-PIECE FULL PORT
1500 CWP SCH. 10 BUTT WELD BALL VALVE

5 YEAR WARRANTY MADE IN USA

STANDARD COMPLIANCE

- Valve Design: MSS SP-110, NACE MR0175 (2000) & MR0103 (2012)
- End Connections: Butt-Weld per ASME B16.25
- Valve Marking: MSS SP-25
- Production Testing: MSS SP-110

FEATURES

- 3-piece construction w/ enclosed fasteners
- Full port
- Stainless steel trim & hardware
- Swing-out center section
- Pressure balanced solid ball
- Compression controlled spiral wound gaskets
- Anti-blowout one piece bottom entry stem
- Two-position locking
- Adjustable multi-piece PTFE "V" style packing
- Fully machined ISO 5211 mounting
- Cast bosses on the center-section and end caps for bleed & drain ports
- Vacuum service to 29 in of Hg.
- 150 psig saturated steam

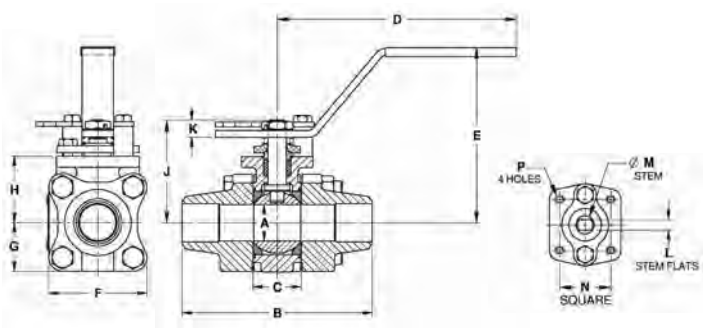

VARIATIONS AVAILABLE

- 86A-300 Schedule 5 Butt-Weld
- 86A-500 Schedule 40 Butt-Weld
- 86A-600 Schedule 80 Butt-Weld

OPTIONS AVAILABLE

(MORE INFORMATION IN SECTION J)

- Minimum quantities apply
- To specify an option, replace the "01" standard suffix with the suffix of the option.
- To specify multiple options, replace the "01" suffix with the desired suffixes in the numerical order shown below. NOTE: Not all suffixes can be combined together.

(SUFFIX)	OPTION	SIZES
-01	Standard Configuration	All
-04-	2-1/4" Stem Extension (Carbon Steel, Zinc Plated)	All
-14-	Vented Ball	All
-15-	Stainless Steel Locking Round Handle	All
-49-	No Lubrication. Assembled Dry	All
-57-	Cleaned for Oxygen Service	All
-60-	Static Grounding	All
-62-	Center Section Only	All
-66-	FNPT x Buttweld	All
-69-	Drilled & Tapped Purge & Drains	All
-70-	4" Extended Bonnet	All
-76-	Live Loaded (Lever Operated)	All
-77-	Live Loaded (Actuated)	All
-90-	Double Packed 4" Extended Bonnet	All
-9P-	Double Packed 4" Extended Bonnet w/ Monitoring Port	All
-EF-	Graphite Packing (API 641 Compliant)	3/4" to 2"
-KF-	PCTFE Stem Bearing	All
-SR-	Spring Return Handle	1/2" to 1"
-UA-	AIS (American Iron & Steel) Compliant	All
-ZP1-	Fugitive Emissions Packing (Viton)	All
-ZP2-	Fugitive Emissions Packing (Buna-N)	All
-ZP3-	Fugitive Emissions Packing (Kalrez)	All

Pressure/Temperature Ratings - Page M-19, Graph No. 2

STANDARD MATERIAL LIST

	PART	MATERIAL
1	Body	ASTM A351-CF8M
2	End Caps	ASTM A351-CF3M
3	Ball	ASTM A276-316SS
4	Stem	ASTM A276-316SS
5	Seat	Multi-Seal
6	Packing	PTFE
7	Stem Bearing	PEEK/PTFE
8	Body Gasket	RPTFE
9	Body Bolts	18-8 Stainless Steel
10	Body Nuts	18-8 Stainless Steel
11	Stop Bolts	18-8 Stainless Steel
12	Gland Bolts	18-8 Stainless Steel
13	Handle Nut/Screw	300 Series Stainless Steel
14	Packing Gland	ASTM A276-316SS
15	Gland Plate	300 Series Stainless Steel
16	Lever Handle	300 Series Stainless Steel
17	Lock Plate	300 Series Stainless Steel
18	Stops	300 Series Stainless Steel

DIMENSIONS

PART NO.	SIZE	A	B	C	D	E	F	G	H	J	K	L	M	N	P	WT.
86A-403-01	1/2"	0.50	3.80	0.89	5.12	3.02	2.02	1.01	1.39	1.97	0.23	0.245	0.375	1.00	10-24	2.3
86A-404-01	3/4"	0.75	4.66	1.10	5.53	3.40	2.40	1.20	1.65	2.35	0.24	0.312	0.500	1.392	1/4-20	4.0
86A-405-01	1"	1.00	5.19	1.31	6.53	4.80	2.67	1.34	1.80	2.80	0.48	0.287	0.500	1.392	1/4-20	5.7
86A-407-01	1-1/2"	1.50	5.96	1.97	6.65	4.70	3.84	1.92	2.49	3.89	0.72	0.412	0.625	1.949	5/16-18	14.4
86A-408-01	2"	2.00	6.84	2.56	8.40	5.47	4.56	2.46	3.17	4.74	0.80	0.477	0.750	1.949	5/16-18	24.4

REV. 17SEP19

aalberts integrated piping systems

86A-500 SERIES

STAINLESS STEEL 3-PIECE FULL PORT
1500 CWP SCH. 40 BUTT WELD BALL VALVE

5 YEAR WARRANTY MADE IN USA

STANDARD COMPLIANCE

- Valve Design: MSS SP-110, NACE MR0175 (2000) & MR0103 (2012)
- End Connections: Butt-Weld per ASME B16.25
- Valve Marking: MSS SP-25
- Production Testing: MSS SP-110

FEATURES

- 3-piece construction w/ enclosed fasteners
- Full port
- Stainless steel trim & hardware
- Swing-out center section
- Pressure balanced solid ball
- Compression controlled RPTFE gaskets
- Anti-blowout one piece bottom entry stem
- Two-position locking
- Fully machined ISO 5211 mounting
- Cast bosses on the center-section and end caps for bleed & drain ports
- Vacuum service to 29 in of Hg.
- 150 psig saturated steam

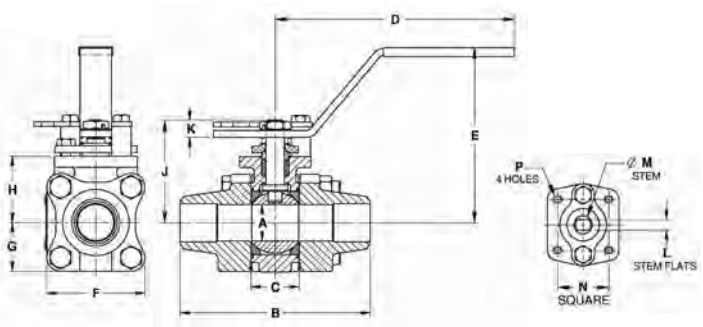

VARIATIONS AVAILABLE

- 86A-300 Schedule 5 Butt-Weld
- 86A-400 Schedule 10 Butt-Weld
- 86A-600 Schedule 80 Butt-Weld

OPTIONS AVAILABLE

(MORE INFORMATION IN SECTION J)

- Minimum quantities apply
- To specify an option, replace the "01" standard suffix with the suffix of the option.
- To specify multiple options, replace the "01" suffix with the desired suffixes in the numerical order shown below. NOTE: Not all suffixes can be combined together.

(SUFFIX)	OPTION	SIZES
-01	Standard Configuration	All
-04-	2-1/4" Stem Extension (Carbon Steel, Zinc Plated)	All
-14-	Vented Ball	All
-15-	Stainless Steel Locking Round Handle	All
-49-	No Lubrication. Assembled Dry	All
-57-	Cleaned for Oxygen Service	All
-60-	Static Grounding	All
-62-	Center Section Only	All
-66-	FNPT x Buttweld	All
-69-	Drilled & Tapped Purge & Drains	All
-70-	4" Extended Bonnet	All
-76-	Live Loaded (Lever Operated)	All
-77-	Live Loaded (Actuated)	All
-90-	Double Packed 4" Extended Bonnet	All
-9P-	Double Packed 4" Extended Bonnet w/ Monitoring Port	All
-EF-	Graphite Packing (API 641 Compliant)	3/4" to 2"
-KF-	PCTFE Stem Bearing	All
-SR-	Spring Return Handle	1/2" to 1"
-UA-	AIS (American Iron & Steel) Compliant	All
-ZP1-	Fugitive Emissions Packing (Viton)	All
-ZP2-	Fugitive Emissions Packing (Buna-N)	All
-ZP3-	Fugitive Emissions Packing (Kalrez)	All

Pressure/Temperature Ratings - Page M-19, Graph No. 24

STANDARD MATERIAL LIST

	PART	MATERIAL
1	Body	ASTM A351-CF8M
2	End Caps	ASTM A351-CF3M
3	Ball	ASTM A276-316SS
4	Stem	ASTM A276-316SS
5	Seat	Multi-Seal
6	Packing	PTFE
7	Stem Bearing	PEEK/PTFE
8	Body Gasket	RPTFE
9	Body Bolts	18-8 Stainless Steel
10	Body Nuts	18-8 Stainless Steel
11	Stop Bolts	18-8 Stainless Steel
12	Gland Bolts	18-8 Stainless Steel
13	Handle Nut/Screw	300 Series Stainless Steel
14	Packing Gland	ASTM A276-316SS
15	Gland Plate	300 Series Stainless Steel
16	Lever Handle	300 Series Stainless Steel
17	Lock Plate	300 Series Stainless Steel
18	Stops	300 Series Stainless Steel

DIMENSIONS

PART NO.	SIZE	A	B	C	D	E	F	G	H	J	K	L	M	N	P	WT.
86A-503-01	1/2"	0.50	3.80	0.89	5.12	3.02	2.02	1.01	1.39	1.97	0.23	0.245	0.375	1.00	10-24	2.3
86A-504-01	3/4"	0.75	4.66	1.10	5.53	3.40	2.40	1.20	1.65	2.35	0.24	0.312	0.500	1.392	1/4-20	4.0
86A-505-01	1"	1.00	5.19	1.31	6.53	4.80	2.67	1.34	1.80	2.80	0.48	0.287	0.500	1.392	1/4-20	5.7
86A-507-01	1-1/2"	1.50	5.96	1.97	6.65	4.70	3.84	1.92	2.49	3.89	0.72	0.412	0.625	1.949	5/16-18	14.4
86A-508-01	2"	2.00	6.84	2.56	8.40	5.47	4.56	2.46	3.17	4.74	0.80	0.477	0.750	1.949	5/16-18	24.4

86A-600 SERIES

STAINLESS STEEL 3-PIECE FULL PORT
Ç1500 CWP SCH. 80 BUTT WELD BALL VALVE

5 YEAR WARRANTY MADE IN USA

STANDARD COMPLIANCE

- Valve Design: MSS SP-110, NACE MR0175 (2000)& MR0103 (2012)
- End Connections: Butt-Weld per ASME B16.25
- Valve Marking: MSS SP-25
- Production Testing: MSS SP-110

FEATURES

- 3-piece construction w/ enclosed fasteners
- Full port
- Stainless steel trim & hardware
- Swing-out center section
- Pressure balanced solid ball
- Compression controlled RPTFE gaskets
- Anti-blowout one piece bottom entry stem
- Two-position locking
- Adjustable multi-piece PTFE "V" style packing
- Fully machined ISO 5211 mounting
- Cast bosses on the center-section and end caps for bleed & drain ports
- Vacuum service to 29 in of Hg.
- 150 psig saturated steam

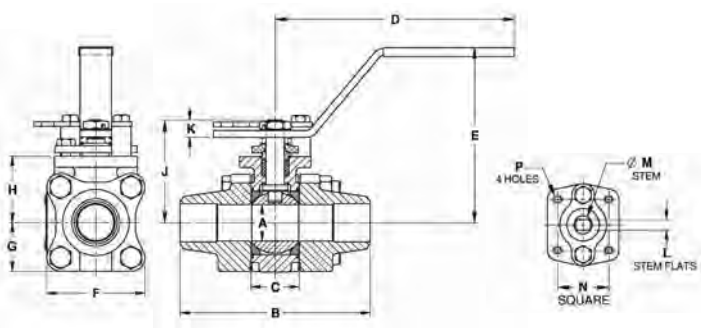

VARIATIONS AVAILABLE

- 86A-300 Schedule 5 Butt-Weld
- 86A-400 Schedule 10 Butt-Weld
- 86A-500 Schedule 40 Butt-Weld

OPTIONS AVAILABLE

(MORE INFORMATION IN SECTION J)

- Minimum quantities apply
- To specify an option, replace the "01" standard suffix with the suffix of the option.
- To specify multiple options, replace the "01" suffix with the desired suffixes in the numerical order shown below. NOTE: Not all suffixes can be combined together.

(SUFFIX)	OPTION	SIZES
-01	Standard Configuration	All
-04-	2-1/4" Stem Extension (Carbon Steel, Zinc Plated)	All
-14-	Vented Ball	All
-15-	Stainless Steel Locking Round Handle	All
-49-	No Lubrication. Assembled Dry	All
-57-	Cleaned for Oxygen Service	All
-60-	Static Grounding	All
-62-	Center Section Only	All
-66-	FNPT x Buttweld	All
-69-	Drilled & Tapped Purge & Drains	All
-70-	4" Extended Bonnet	All
-76-	Live Loaded (Lever Operated)	All
-77-	Live Loaded (Actuated)	All
-90-	Double Packed 4" Extended Bonnet	All
-9P-	Double Packed 4" Extended Bonnet w/ Monitoring Port	All
-EF-	Graphite Packing (API 641 Compliant)	3/4" to 2"
-KF-	PCTFE Stem Bearing	All
-SR-	Spring Return Handle	1/2" to 1"
-UA-	AIS (American Iron & Steel) Compliant	All
-ZP1-	Fugitive Emissions Packing (Viton)	All
-ZP2-	Fugitive Emissions Packing (Buna-N)	All
-ZP3-	Fugitive Emissions Packing (Kalrez)	All

Pressure/Temperature Ratings - Page M-19, Graph No. 24

STANDARD MATERIAL LIST

	PART	MATERIAL
1	Body	ASTM A351-CF8M
2	End Caps	ASTM A351-CF3M
3	Ball	ASTM A276-316SS
4	Stem	ASTM A276-316SS
5	Seat	Multi-Seal
6	Packing	PTFE
7	Stem Bearing	PEEK/PTFE
8	Body Gasket	RPTFE
9	Body Bolts	18-8 Stainless Steel
10	Body Nuts	18-8 Stainless Steel
11	Stop Bolts	18-8 Stainless Steel
12	Gland Bolts	18-8 Stainless Steel
13	Handle Nut/Screw	300 Series Stainless Steel
14	Packing Gland	ASTM A276-316SS
15	Gland Plate	300 Series Stainless Steel
16	Lever Handle	300 Series Stainless Steel
17	Lock Plate	300 Series Stainless Steel
18	Stops	300 Series Stainless Steel

DIMENSIONS

PART NO.	SIZE	A	B	C	D	E	F	G	H	J	K	L	M	N	P	WT.
86A-603-01	1/2"	0.50	3.80	0.89	5.12	3.02	2.02	1.01	1.39	1.97	0.23	0.245	0.375	1.00	10-24	2.3
86A-604-01	3/4"	0.75	4.66	1.10	5.53	3.40	2.40	1.20	1.65	2.35	0.24	0.312	0.500	1.392	1/4-20	4.0
86A-605-01	1"	1.00	5.19	1.31	6.53	4.80	2.67	1.34	1.80	2.80	0.48	0.287	0.500	1.392	1/4-20	5.7
86A-607-01	1-1/2"	1.50	5.96	1.97	6.65	4.70	3.84	1.92	2.49	3.89	0.72	0.412	0.625	1.949	5/16-18	14.4
86A-608-01	2"	2.00	6.84	2.56	8.40	5.47	4.56	2.46	3.17	4.74	0.80	0.477	0.750	1.949	5/16-18	24.4

REV. 17SEP19

aalberts integrated piping systems

86B-100 SERIES

STAINLESS STEEL 3-PIECE FULL PORT
CLASS 600 NPT BALL VALVE

5 YEAR WARRANTY MADE IN USA

STANDARD COMPLIANCE

- Valve Design: ASME B16.34, Class 600, NACE MR0175 (2000) & MR0103 (2012), API 608
- End Connections: NPT per ASME B1.20.1
- Valve Marking: ASME B16.3
- Production Testing: ASME B16.34

FEATURES

- 3-piece construction w/ enclosed fasteners
- Full port
- Stainless steel trim & hardware
- Swing-out center section
- Pressure balanced solid ball
- Compression controlled spiral wound gaskets
- Anti-blowout one piece bottom entry stem
- Statically grounded ball, stem, & body
- Two-position locking
- Adjustable multi-piece PTFE "V" style packing
- Fully machined ISO 5211 mounting
- Cast bosses on the center-section and end caps for bleed & drain ports
- Fire safe to API 607 (requires -24 suffix)
- Vacuum service to 29 in of Hg.
- CE Marking, 1-1/4" and larger (add "-CE" suffix)
- 250 psig saturated steam
- CGA 3.16-M88 (2014)

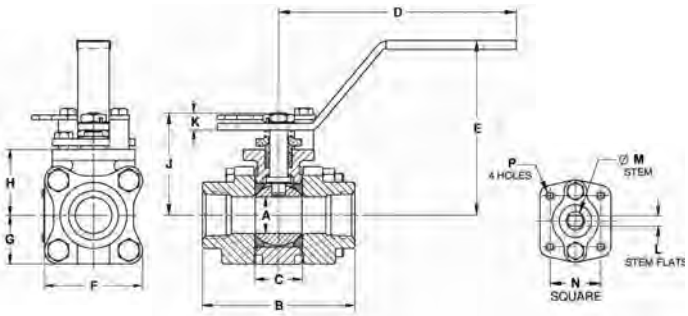

OPTIONS AVAILABLE

(MORE INFORMATION IN SECTION J)

- Minimum quantities apply
- To specify an option, replace the "01" standard suffix with the suffix of the option.
- To specify multiple options, replace the "01" suffix with the desired suffixes in the numerical order shown below. NOTE: Not all suffixes can be combined together.

(SUFFIX)	OPTION	SIZES
-01	Standard Configuration	All
-P -01-	BSPP (Parallel) Thread Connection	All
-T -01-	BSPT (Tapered) Thread Connection	All
-04-	2-1/4" Stem Extension (Carbon Steel, Zinc Plated)	All
-14-	Vented Ball	All
-15-	Stainless Steel Locking Round Handle	All
-21-	UHMWPE Seats w/ Graphite Seals	All
-24-	Graphite Packing, Spiral Wound Graphite Body Seal, PTFE/PEEK Bearing (Fire Safe API 607, 6th Edition, ISO 10497:2010)	All
-38-	Peek Seats, Graphite Stem Packing & Gaskets	All
-49-	No Lubrication. Assembled Dry	All
-57-	Cleaned for Oxygen Service	All
-62-	Center Section Only	All
-63-	NPT x Socketweld	All
-69-	Drilled & Tapped Purge & Drains	All
-70-	4" Extended Bonnet	All
-76-	Live Loaded (Lever Operated)	All
-77-	Live Loaded (Actuated)	All
-90-	Double Packed 4" Extended Bonnet	All
-9P-	Double Packed 4" Extended Bonnet w/ Monitoring Port	All
-CE-	CE Marking	1-1/4" to 1"
-EF-	Graphite Packing (API 641 Compliant)	3/4" to 2"
-EP-	Garlock EVSP Stem Packing w/ Spiral Wound Graphite Gasket (Fire Safe by Design)	All
-KF-	PCTFE Stem Bearing	All
-SR-	Spring Return Handle	1/4" to 1"
-UA-	AIS (American Iron & Steel) Compliant	All
-UL-	UL Listed	All
-ZP1-	Fugitive Emissions Packing (Viton)	All
-ZP2-	Fugitive Emissions Packing (Buna-N)	All
-ZP3-	Fugitive Emissions Packing (Kalrez)	All

STANDARD MATERIAL LIST

	PART	MATERIAL
1	Body	ASTM A351-CF8M
2	End Caps	ASTM A351-CF3M
3	Ball	ASTM A276-316SS
4	Stem	ASTM A276-316SS ASTM A564 17-4PH (2" with -38 suffix)
5	Seat	Multi-Seal
6	Packing	PTFE
7	Stem Bearing	PEEK/PTFE
8	Body Gasket	PTFE Spiral Wound
9	Body Bolts	ASTM A193-Gr.B8M3
10	Body Nuts	ASTM A194-Gr.8
11	Stop Bolts	18-8 Stainless Steel
12	Gland Bolts	ASTM A193-Gr.B8
13	Handle Nut/Screw	300 Series Stainless Steel
14	Packing Gland	ASTM A276-316SS
15	Gland Plate	300 Series Stainless Steel
16	Lever Handle	300 Series Stainless Steel
17	Lock Plate	300 Series Stainless Steel
18	Stops	300 Series Stainless Steel
19	Internal Grounding Spring	300 Series Stainless Steel
20	External Grounding Spring	300 Series Stainless Steel

Pressure/Temperature Ratings - Page M-20, Graph No. 26

DIMENSIONS

PART NO.	SIZE	A	B	C	D	E	F	G	H	J	K	L	M	N	P	WT.
86B-101-01	1/4"	0.37	2.80	0.89	5.12	3.02	2.02	1.01	1.39	1.97	0.23	0.245	0.375	1.00	10-24	2.3
86B-102-01	3/8	0.50	2.80	0.89	5.12	3.02	2.02	1.01	1.39	1.97	0.23	0.245	0.375	1.00	10-24	2.3
86B-103-01	1/2"	0.50	2.80	0.89	5.12	3.02	2.02	1.01	1.39	1.97	0.23	0.245	0.375	1.00	10-24	2.3
86B-104-01	3/4"	0.75	3.68	1.10	5.53	3.40	2.40	1.20	1.65	2.35	0.24	0.312	0.500	1.392	1/4-20	4.0
86B-105-01	1"	1.00	4.19	1.31	6.53	4.80	2.67	1.34	1.80	2.80	0.48	0.287	0.500	1.392	1/4-20	5.7
86B-106-01	1-1/4"	1.50	4.50	1.97	6.65	4.70	3.84	1.92	2.49	3.89	0.72	0.412	0.625	1.949	5/16-18	14.2
86B-107-01	1-1/2"	1.50	4.98	1.97	6.65	4.70	3.84	1.92	2.49	3.89	0.72	0.412	0.625	1.949	5/16-18	14.4
86B-108-01	2"	2.00	5.86	2.56	8.40	5.47	4.56	2.46	3.17	4.74	0.80	0.477	0.750	1.949	5/16-18	24.4

REV. 17SEP19

86B-200 SERIES

STAINLESS STEEL 3-PIECE FULL PORT
CLASS 600 SOCKET WELD BALL VALVE

5 YEAR WARRANTY MADE IN USA

STANDARD COMPLIANCE

- Valve Design: ASME B16.34, Class 600, NACE MR0175 (2000) & MR0103 (2012), API 608
- End Connections: Socket-weld per ASME B16.11
- Valve Marking: ASME B16.34
- Production Testing: ASME B16.34

FEATURES

- 3-piece construction w/ enclosed fasteners
- Full port
- Stainless steel trim & hardware
- Swing-out center section
- Pressure balanced solid ball
- Compression controlled spiral wound gaskets
- Anti-blowout one piece bottom entry stem
- Statically grounded ball, stem, & body
- Two-position locking
- Adjustable multi-piece PTFE "V" style packing
- Fully machined ISO 5211 mounting
- Cast bosses on the center-section and end caps for bleed & drain ports
- Fire safe to API 607 (requires -24 suffix)
- Vacuum service to 29 in of Hg.
- CE Marking, 1-1/4" and larger (add "-CE" suffix)
- 250 psig saturated steam
- CGA 3.16-M88 (2014)

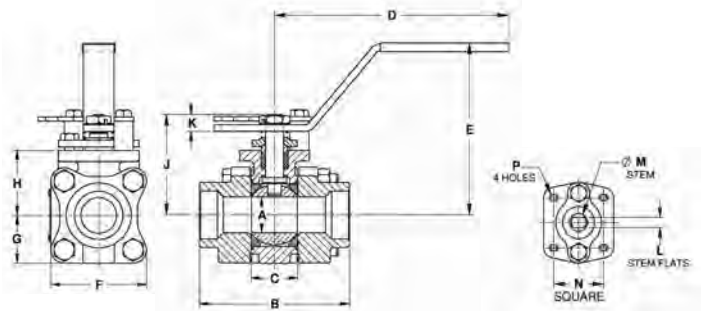

STANDARD MATERIAL LIST

	PART	MATERIAL
1	Body	ASTM A351-CF8M
2	End Caps	ASTM A351-CF3M
3	Ball	ASTM A276-316SS
4	Stem	ASTM A276-316SS ASTM A564 17-4PH (2" with -38 suffix)
5	Seat	Multi-Seal
6	Packing	PTFE
7	Stem Bearing	PEEK/PTFE
8	Body Gasket	PTFE Spiral Wound
9	Body Bolts	ASTM A193-Gr.B8M3
10	Body Nuts	ASTM A194-Gr.8
11	Stop Bolts	18-8 Stainless Steel
12	Gland Bolts	ASTM A193-Gr.B8
13	Handle Nut/Screw	300 Series Stainless Steel
14	Packing Gland	ASTM A276-316SS
15	Gland Plate	300 Series Stainless Steel
16	Lever Handle	300 Series Stainless Steel
17	Lock Plate	300 Series Stainless Steel
18	Stops	300 Series Stainless Steel
19	Internal Grounding Spring	300 Series Stainless Steel
20	External Grounding Spring	300 Series Stainless Steel

OPTIONS AVAILABLE

(MORE INFORMATION IN SECTION J)

- Minimum quantities apply
- To specify an option, replace the "01" standard suffix with the suffix of the option.
- To specify multiple options, replace the "01" suffix with the desired suffixes in the numerical order shown below. NOTE: Not all suffixes can be combined together.

(SUFFIX)	OPTION	SIZES
-01	Standard Configuration	All
-04-	2-1/4" Stem Extension (Carbon Steel, Zinc Plated)	All
-14-	Vented Ball	All
-15-	Stainless Steel Locking Round Handle	All
-21-	UHMWPE Seats w/ Graphite Seals	All
-24-	Graphite Packing, Spiral Wound Graphite Body Seal, PTFE/PEEK Bearing (Fire Safe API 607, 6th Edition, ISO 10497:2010)	All
-38-	Peek Seats, Graphite Stem Packing & Gaskets	All
-49-	No Lubrication. Assembled Dry	All
-57-	Cleaned for Oxygen Service	All
-62-	Center Section Only	All
-69-	Drilled & Tapped Purge & Drains	All
-70-	4" Extended Bonnet	All
-76-	Live Loaded (Lever Operated)	All
-77-	Live Loaded (Actuated)	All
-90-	Double Packed 4" Extended Bonnet	All
-9P-	Double Packed 4" Extended Bonnet w/ Monitoring Port	All
-CE-	CE Marking	1-1/4" to 2"
-EF-	Graphite Packing (API 641 Compliant)	3/4" to 2"
-EP-	Garlock EVSP Stem Packing w/ Spiral Wound Graphite Gasket (Fire Safe by Design)	All
-KF-	PCTFE Stem Bearing	All
-SR-	Spring Return Handle	1/4" to 1"
-UA-	AIS (American Iron & Steel) Compliant	All
-UL-	UL Listed	All
-ZP1-	Fugitive Emissions Packing (Viton)	All
-ZP2-	Fugitive Emissions Packing (Buna-N)	All
-ZP3-	Fugitive Emissions Packing (Kalrez)	All

Pressure/Temperature Ratings - Page M-20, Graph No. 26

DIMENSIONS

PART NO.	SIZE	A	B	C	D	E	F	G	H	J	K	L	M	N	P	WT.
86B-201-01	1/4"	0.37	2.80	0.89	5.12	3.02	2.02	1.01	1.39	1.97	0.23	0.245	0.375	1.00	10-24	2.3
86B-202-01	3/8"	0.50	2.80	0.89	5.12	3.02	2.02	1.01	1.39	1.97	0.23	0.245	0.375	1.00	10-24	2.3
86B-203-01	1/2"	0.50	2.80	0.89	5.12	3.02	2.02	1.01	1.39	1.97	0.23	0.245	0.375	1.00	10-24	2.3
86B-204-01	3/4"	0.75	3.68	1.10	5.53	3.40	2.40	1.20	1.65	2.35	0.24	0.312	0.500	1.392	1/4-20	4.0
86B-205-01	1"	1.00	4.19	1.31	6.53	4.80	2.67	1.34	1.80	2.80	0.48	0.287	0.500	1.392	1/4-20	5.7
86B-206-01	1-1/4"	1.50	4.50	1.97	6.65	4.70	3.84	1.92	2.49	3.89	0.72	0.412	0.625	1.949	5/16-18	14.2
86B-207-01	1-1/2"	1.50	4.98	1.97	6.65	4.70	3.84	1.92	2.49	3.89	0.72	0.412	0.625	1.949	5/16-18	14.4
86B-208-01	2"	2.00	5.86	2.56	8.40	5.47	4.56	2.46	3.17	4.74	0.80	0.477	0.750	1.949	5/16-18	24.4

REV. 17SEP19

aalberts integrated piping systems

86B-300 SERIES

STAINLESS STEEL 3-PIECE FULL PORT
CLASS 600 SCH. 5 BUTT WELD BALL VALVE

5 YEAR WARRANTY MADE IN USA

STANDARD COMPLIANCE

- Valve Design: ASME B16.34, Class 600, NACE MR0175 (2000) & MR0103 (2012), API 608
- End Connections: Butt-Weld per ASME B16.25
- Valve Marking: ASME B16.34
- Production Testing: ASME B16.34

FEATURES

- 3-piece construction w/ enclosed fasteners
- Full port
- Stainless steel trim & hardware
- Swing-out center section
- Pressure balanced solid ball
- Compression controlled spiral wound gaskets
- Anti-blowout one piece bottom entry stem
- Statically grounded ball, stem, & body
- Two-position locking
- Adjustable multi-piece PTFE "V" style packing
- Fully machined ISO 5211 mounting
- Cast bosses on the center-section and end caps for bleed & drain ports
- Fire safe to API 607 (requires -24 suffix)
- Vacuum service to 29 in of Hg.
- CE Marking, 1-1/2" and larger (add "-CE" suffix)
- 250 psig saturated steam
- CGA 3.16-M88 (2014)

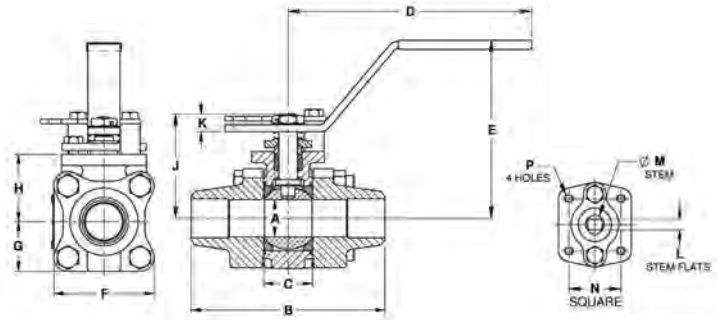

VARIATIONS AVAILABLE

- 86B-400 Schedule 10 Butt-Weld
- 86B-500 Schedule 40 Butt-Weld
- 86B-600 Schedule 80 Butt-Weld

OPTIONS AVAILABLE

(MORE INFORMATION IN SECTION J)

- Minimum quantities apply
- To specify an option, replace the "01" standard suffix with the suffix of the option.
- To specify multiple options, replace the "01" suffix with the desired suffixes in the numerical order shown below. NOTE: Not all suffixes can be combined together.

(SUFFIX)	OPTION	SIZES
-01	Standard Configuration	All
-04-	2-1/4" Stem Extension (Carbon Steel, Zinc Plated)	All
-14-	Vented Ball	All
-15-	Stainless Steel Locking Round Handle	All
-21-	UHMWPE Seats w/ Graphite Seals	All
-24-	Graphite Packing, Spiral Wound Graphite Body Seal, PTFE/PEEK Bearing (Fire Safe API 607, 6th Edition, ISO 10497:2010)	All
-38-	Peek Seats, Graphite Stem Packing & Gaskets	All
-49-	No Lubrication. Assembled Dry	All
-57-	Cleaned for Oxygen Service	All
-62-	Center Section Only	All
-66-	FNPT x Buttweld	All
-69-	Drilled & Tapped Purge & Drains	All
-70-	4" Extended Bonnet	All
-76-	Live Loaded (Lever Operated)	All
-77-	Live Loaded (Actuated)	All
-90-	Double Packed 4" Extended Bonnet	All
-9P-	Double Packed 4" Extended Bonnet w/ Monitoring Port	All
-CE-	CE Marking	1-1/4" to 2"
-EF-	Graphite Packing (API 641 Compliant)	3/4" to 2"
-EP-	Garlock EVSP Stem Packing w/ Spiral Wound Graphite Gasket (Fire Safe by Design)	All
-KF-	PCTFE Stem Bearing	All
-SR-	Spring Return Handle	1/2" to 1"
-UA-	AIS (American Iron & Steel) Compliant	All
-UL-	UL Listed	All
-ZP1-	Fugitive Emissions Packing (Viton)	All
-ZP2-	Fugitive Emissions Packing (Buna-N)	All
-ZP3-	Fugitive Emissions Packing (Kalrez)	All

STANDARD MATERIAL LIST

	PART	MATERIAL
1	Body	ASTM A351-CF8M
2	End Caps	ASTM A351-CF3M
3	Ball	ASTM A276-316SS
4	Stem	ASTM A276-316SS ASTM A564 17-4PH (2" with -38 suffix)
5	Seat	Multi-Seal
6	Packing	PTFE
7	Stem Bearing	PEEK/PTFE
8	Body Gasket	PTFE Spiral Wound
9	Body Bolts	ASTM A193-Gr.B8M3
10	Body Nuts	ASTM A194-Gr.8
11	Stop Bolts	18-8 Stainless Steel
12	Gland Bolts	ASTM A193-Gr.B8
13	Handle Nut/Screw	300 Series Stainless Steel
14	Packing Gland	ASTM A276-316SS
15	Gland Plate	300 Series Stainless Steel
16	Lever Handle	300 Series Stainless Steel
17	Lock Plate	300 Series Stainless Steel
18	Stops	300 Series Stainless Steel
19	Internal Grounding Spring	300 Series Stainless Steel
20	External Grounding Spring	300 Series Stainless Steel

Pressure/Temperature Ratings - Page M-20, Graph No. 26

DIMENSIONS

PART NO.	SIZE	A	B	C	D	E	F	G	H	J	K	L	M	N	P	WT.
86B-303-01	1/2"	0.50	3.80	0.89	5.12	3.02	2.02	1.01	1.39	1.97	0.23	0.245	0.375	1.00	10-24	2.3
86B-304-01	3/4"	0.75	4.66	1.10	5.53	3.40	2.40	1.20	1.65	2.35	0.24	0.312	0.500	1.392	1/4-20	4.0
86B-305-01	1"	1.00	5.19	1.31	6.53	4.80	2.67	1.34	1.80	2.80	0.48	0.287	0.500	1.392	1/4-20	5.7
86B-307-01	1-1/2"	1.50	5.96	1.97	6.65	4.70	3.84	1.92	2.49	3.89	0.72	0.412	0.625	1.949	5/16-18	14.4
86B-308-01	2"	2.00	6.84	2.56	8.40	5.47	4.56	2.46	3.17	4.74	0.80	0.477	0.750	1.949	5/16-18	24.4

REV. 17SEP19

86B-400 SERIES

STAINLESS STEEL 3-PIECE FULL PORT
CLASS 600 SCH. 10 BUTT WELD BALL VALVE

5 YEAR WARRANTY MADE IN USA

STANDARD COMPLIANCE

- Valve Design: ASME B16.34, Class 600, NACE MR0175 (2000) & MR0103 (2012), API 608
- End Connections: Butt-Weld per ASME B16.25
- Valve Marking: ASME B16.34
- Production Testing: ASME B16.34

FEATURES

- 3-piece construction w/ enclosed fasteners
- Full port
- Stainless steel trim & hardware
- Swing-out center section
- Pressure balanced solid ball
- Compression controlled spiral wound gaskets
- Anti-blowout one piece bottom entry stem
- Statically grounded ball, stem, & body
- Two-position locking
- Adjustable multi-piece PTFE "V" style packing
- Fully machined ISO 5211 mounting
- Cast bosses on the center-section and end caps for bleed & drain ports
- Fire safe to API 607 (requires -24 suffix)
- Vacuum service to 29 in of Hg.
- CE Marking, 1-1/2" and larger (add "-CE" suffix)
- 250 psig saturated steam
- CGA 3.16-M88 (2014)

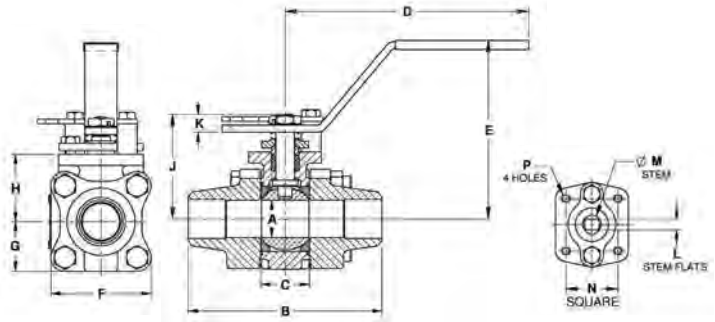

VARIATIONS AVAILABLE

- 86B-300 Schedule 5 Butt-Weld
- 86B-500 Schedule 40 Butt-Weld
- 86B-600 Schedule 80 Butt-Weld

OPTIONS AVAILABLE

(MORE INFORMATION IN SECTION J)

- Minimum quantities apply
- To specify an option, replace the "01" standard suffix with the suffix of the option.
- To specify multiple options, replace the "01" suffix with the desired suffixes in the numerical order shown below. NOTE: Not all suffixes can be combined together.

(SUFFIX)	OPTION	SIZES
-01	Standard Configuration	All
-04-	2-1/4" Stem Extension (Carbon Steel, Zinc Plated)	All
-14-	Vented Ball	All
-15-	Stainless Steel Locking Round Handle	All
-21-	UHMWPE Seats w/ Graphite Seals	All
-24-	Graphite Packing, Spiral Wound Graphite Body Seal, PTFE/PEEK Bearing (Fire Safe API 607, 6th Edition, ISO 10497:2010)	All
-38-	Peek Seats, Graphite Stem Packing & Gaskets	All
-49-	No Lubrication. Assembled Dry	All
-57-	Cleaned for Oxygen Service	All
-62-	Center Section Only	All
-66-	FNPT x Buttweld	All
-69-	Drilled & Tapped Purge & Drains	All
-70-	4" Extended Bonnet	All
-76-	Live Loaded (Lever Operated)	All
-77-	Live Loaded (Actuated)	All
-90-	Double Packed 4" Extended Bonnet	All
-9P-	Double Packed 4" Extended Bonnet w/ Monitoring Port	All
-CE-	CE Marking	1-1/4" to 2"
-EP-	Garlock EVSP Stem Packing w/ Spiral Wound Graphite Gasket (Fire Safe by Design)	All
-EF-	Graphite Packing (API 641 Compliant)	3/4" to 2"
-KF-	PCTFE Stem Bearing	All
-SR-	Spring Return Handle	1/2" to 1"
-UA-	AIS (American Iron & Steel) Compliant	All
-UL-	UL Listed	All
-ZP1-	Fugitive Emissions Packing (Viton)	All
-ZP2-	Fugitive Emissions Packing (Buna-N)	All
-ZP3-	Fugitive Emissions Packing (Kalrez)	All

Pressure/Temperature Ratings - Page M-20, Graph No. 26

STANDARD MATERIAL LIST

	PART	MATERIAL
1	Body	ASTM A351-CF8M
2	End Caps	ASTM A351-CF3M
3	Ball	ASTM A276-316SS
4	Stem	ASTM A276-316SS ASTM A564 17-4PH (2" with -38 suffix)
5	Seat	Multi-Seal
6	Packing	PTFE
7	Stem Bearing	PEEK/PTFE
8	Body Gasket	PTFE Spiral Wound
9	Body Bolts	ASTM A193-Gr.B8M3
10	Body Nuts	ASTM A194-Gr.8
11	Stop Bolts	18-8 Stainless Steel
12	Gland Bolts	ASTM A193-Gr.B8
13	Handle Nut/Screw	300 Series Stainless Steel
14	Packing Gland	ASTM A276-316SS
15	Gland Plate	300 Series Stainless Steel
16	Lever Handle	300 Series Stainless Steel
17	Lock Plate	300 Series Stainless Steel
18	Stops	300 Series Stainless Steel
19	Internal Grounding Spring	300 Series Stainless Steel
20	External Grounding Spring	300 Series Stainless Steel

DIMENSIONS

PART NO.	SIZE	A	B	C	D	E	F	G	H	J	K	L	M	N	P	WT.
86B-403-01	1/2"	0.50	3.80	0.89	5.12	3.02	2.02	1.01	1.39	1.97	0.23	0.245	0.375	1.00	10-24	2.3
86B-404-01	3/4"	0.75	4.66	1.10	5.53	3.40	2.40	1.20	1.65	2.35	0.24	0.312	0.500	1.392	1/4-20	4.0
86B-405-01	1"	1.00	5.19	1.31	6.53	4.80	2.67	1.34	1.80	2.80	0.48	0.287	0.500	1.392	1/4-20	5.7
86B-407-01	1-1/2"	1.50	5.96	1.97	6.65	4.70	3.84	1.92	2.49	3.89	0.72	0.412	0.625	1.949	5/16-18	14.4
86B-408-01	2"	2.00	6.84	2.56	8.40	5.47	4.56	2.46	3.17	4.74	0.80	0.477	0.750	1.949	5/16-18	24.4

REV. 17SEP19

aalberts integrated piping systems

86B-500 SERIES

STAINLESS STEEL 3-PIECE FULL PORT
CLASS 600 SCH. 40 BUTT WELD BALL VALVE

5 YEAR WARRANTY MADE IN USA

STANDARD COMPLIANCE

- Valve Design: ASME B16.34, Class 600, NACE MR0175 (2000) & MR0103 (2012), API 608
- End Connections: Butt-Weld per ASME B16.25
- Valve Marking: ASME B16.34
- Production Testing: ASME B16.34

FEATURES

- 3-piece construction w/ enclosed fasteners
- Full port
- Stainless steel trim & hardware
- Swing-out center section
- Pressure balanced solid ball
- Compression controlled spiral wound gaskets
- Anti-blowout one piece bottom entry stem
- Statically grounded ball, stem, & body
- Two-position locking
- Adjustable multi-piece PTFE "V" style packing
- Fully machined ISO 5211 mounting
- Cast bosses on the center-section and end caps for bleed & drain ports
- Fire safe to API 607 (requires -24 suffix)
- Vacuum service to 29 in of Hg.
- CE Marking, 1-1/2" and larger (add "-CE" suffix)
- 250 psig saturated steam
- CGA 3.16-M88 (2014)

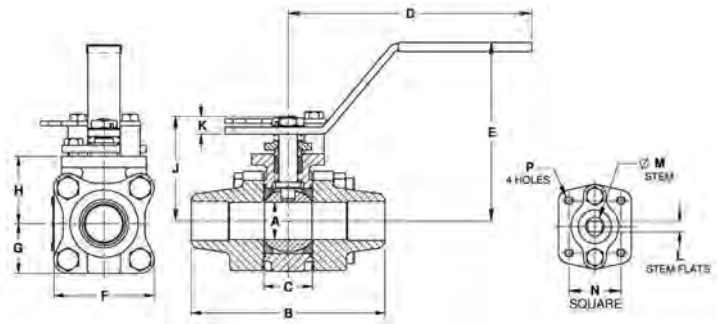

VARIATIONS AVAILABLE

- 86B-300 Schedule 5 Butt-Weld
- 86B-400 Schedule 10 Butt-Weld
- 86B-600 Schedule 80 Butt-Weld

OPTIONS AVAILABLE

(MORE INFORMATION IN SECTION J)

- Minimum quantities apply
- To specify an option, replace the "01" standard suffix with the suffix of the option.
- To specify multiple options, replace the "01" suffix with the desired suffixes in the numerical order shown below. NOTE: Not all suffixes can be combined together.

(SUFFIX)	OPTION	SIZES
-01	Standard Configuration	All
-04-	2-1/4" Stem Extension (Carbon Steel, Zinc Plated)	All
-14-	Vented Ball	All
-15-	Stainless Steel Locking Round Handle	All
-21-	UHMWPE Seats w/ Graphite Seals	All
-24-	Graphite Packing, Spiral Wound Graphite Body Seal, PTFE/PEEK Bearing (Fire Safe API 607, 6th Edition, ISO 10497:2010)	All
-38-	Peek Seats, Graphite Stem Packing & Gaskets	All
-49-	No Lubrication. Assembled Dry	All
-57-	Cleaned for Oxygen Service	All
-62-	Center Section Only	All
-66-	FNPT x Buttweld	All
-69-	Drilled & Tapped Purge & Drains	All
-70-	4" Extended Bonnet	All
-76-	Live Loaded (Lever Operated)	All
-77-	Live Loaded (Actuated)	All
-90-	Double Packed 4" Extended Bonnet	All
-9P-	Double Packed 4" Extended Bonnet w/ Monitoring Port	All
-CE-	CE Marking	1-1/4" to 2"
-EF-	Graphite Packing (API 641 Compliant)	3/4" to 2"
-EP-	Garlock EVSP Stem Packing w/ Spiral Wound Graphite Gasket (Fire Safe by Design)	All
-KF-	PCTFE Stem Bearing	All
-SR-	Spring Return Handle	1/2" to 1"
-UA-	AIS (American Iron & Steel) Compliant	All
-UL-	UL Listed	All
-ZP1-	Fugitive Emissions Packing (Viton)	All
-ZP2-	Fugitive Emissions Packing (Buna-N)	All
-ZP3-	Fugitive Emissions Packing (Kalrez)	All

Pressure/Temperature Ratings - Page M-20, Graph No. 26

STANDARD MATERIAL LIST

	PART	MATERIAL
1	Body	ASTM A351-CF8M
2	End Caps	ASTM A351-CF3M
3	Ball	ASTM A276-316SS
4	Stem	ASTM A276-316SS ASTM A564 17-4PH (2" with -38 suffix)
5	Seat	Multi-Seal
6	Packing	PTFE
7	Stem Bearing	PEEK/PTFE
8	Body Gasket	PTFE Spiral Wound
9	Body Bolts	ASTM A193-Gr.B8M3
10	Body Nuts	ASTM A194-Gr.8
11	Stop Bolts	18-8 Stainless Steel
12	Gland Bolts	ASTM A193-Gr.B8
13	Handle Nut/Screw	300 Series Stainless Steel
14	Packing Gland	ASTM A276-316SS
15	Gland Plate	300 Series Stainless Steel
16	Lever Handle	300 Series Stainless Steel
17	Lock Plate	300 Series Stainless Steel
18	Stops	300 Series Stainless Steel
19	Internal Grounding Spring	300 Series Stainless Steel
20	External Grounding Spring	300 Series Stainless Steel

DIMENSIONS

PART NO.	SIZE	A	B	C	D	E	F	G	H	J	K	L	M	N	P	WT.
86B-503-01	1/2"	0.50	3.80	0.89	5.12	3.02	2.02	1.01	1.39	1.97	0.23	0.245	0.375	1.00	10-24	2.3
86B-504-01	3/4"	0.75	4.66	1.10	5.53	3.40	2.40	1.20	1.65	2.35	0.24	0.312	0.500	1.392	1/4-20	4.0
86B-505-01	1"	1.00	5.19	1.31	6.53	4.80	2.67	1.34	1.80	2.80	0.48	0.287	0.500	1.392	1/4-20	5.7
86B-507-01	1-1/2"	1.50	5.96	1.97	6.65	4.70	3.84	1.92	2.49	3.89	0.72	0.412	0.625	1.949	5/16-18	14.4
86B-508-01	2"	2.00	6.84	2.56	8.40	5.47	4.56	2.46	3.17	4.74	0.80	0.477	0.750	1.949	5/16-18	24.4

REV. 17SEP19

86B-600 SERIES

STAINLESS STEEL 3-PIECE FULL PORT
CLASS 600 SCH. 80 BUTT WELD BALL VALVE

5 YEAR WARRANTY MADE IN USA

STANDARD COMPLIANCE

- Valve Design: ASME B16.34, Class 600, NACE MR0175 (2000) & MR0103 (2012), API 608
- End Connections: Butt-Weld per ASME B16.25
- Valve Marking: ASME B16.34
- Production Testing: ASME B16.34

FEATURES

- 3-piece construction w/ enclosed fasteners
- Full port
- Stainless steel trim & hardware
- Swing-out center section
- Pressure balanced solid ball
- Compression controlled spiral wound gaskets
- Anti-blowout one piece bottom entry stem
- Statically grounded ball, stem, & body
- Two-position locking
- Adjustable multi-piece PTFE "V" style packing
- Fully machined ISO 5211 mounting
- Cast bosses on the center-section and end caps for bleed & drain ports
- Fire safe to API 607 (requires -24 suffix)
- Vacuum service to 29 in of Hg.
- CE Marking, 1-1/2" and larger (add "-CE" suffix)
- 250 psig saturated steam
- CGA 3.16-M88 (2014)

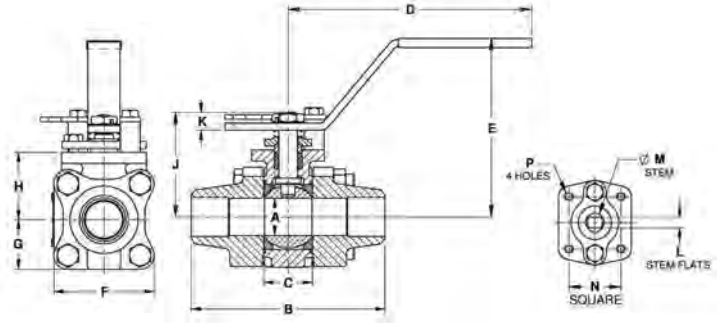

VARIATIONS AVAILABLE

- 86B-300 Schedule 5 Butt-Weld
- 86B-400 Schedule 10 Butt-Weld
- 86B-500 Schedule 40 Butt-Weld

OPTIONS AVAILABLE

(MORE INFORMATION IN SECTION J)

- Minimum quantities apply
- To specify an option, replace the "01" standard suffix with the suffix of the option.
- To specify multiple options, replace the "01" suffix with the desired suffixes in the numerical order shown below. NOTE: Not all suffixes can be combined together.

(SUFFIX)	OPTION	SIZES
-01	Standard Configuration	All
-04-	2-1/4" Stem Extension (Carbon Steel, Zinc Plated)	All
-14-	Vented Ball	All
-15-	Stainless Steel Locking Round Handle	All
-21-	UHMWPE Seats w/ Graphite Seals	All
-24-	Graphite Packing, Spiral Wound Graphite Body Seal, PTFE/PEEK Bearing (Fire Safe API 607, 6th Edition, ISO 10497:2010)	All
-38-	Peek Seats, Graphite Stem Packing & Gaskets	All
-49-	No Lubrication. Assembled Dry	All
-57-	Cleaned for Oxygen Service	All
-62-	Center Section Only	All
-66-	FNPT x Buttweld	All
-69-	Drilled & Tapped Purge & Drains	All
-70-	4" Extended Bonnet	All
-76-	Live Loaded (Lever Operated)	All
-77-	Live Loaded (Actuated)	All
-90-	Double Packed 4" Extended Bonnet	All
-9P-	Double Packed 4" Extended Bonnet w/ Monitoring Port	All
-CE-	CE Marking	1-1/2" to 2"
-EF-	Graphite Packing (API 641 Compliant)	3/4" to 2"
-EP-	Garlock EVSP Stem Packing w/ Spiral Wound Graphite Gasket (Fire Safe by Design)	All
-KF-	PCTFE Stem Bearing	All
-SR-	Spring Return Handle	1/2" to 1"
-UA-	AIS (American Iron & Steel) Compliant	All
-UL-	UL Listed	All
-ZP1-	Fugitive Emissions Packing (Viton)	All
-ZP2-	Fugitive Emissions Packing (Buna-N)	All
-ZP3-	Fugitive Emissions Packing (Kalrez)	All

STANDARD MATERIAL LIST

	PART	MATERIAL
1	Body	ASTM A351-CF8M
2	End Caps	ASTM A351-CF3M
3	Ball	ASTM A276-316SS
4	Stem	ASTM A276-316SS ASTM A564 17-4PH (2" with -38 suffix)
5	Seat	Multi-Seal
6	Packing	PTFE
7	Stem Bearing	PEEK/PTFE
8	Body Gasket	PTFE Spiral Wound
9	Body Bolts	ASTM A193-Gr.B8M3
10	Body Nuts	ASTM A194-Gr.8
11	Stop Bolts	18-8 Stainless Steel
12	Gland Bolts	ASTM A193-Gr.B8
13	Handle Nut/Screw	300 Series Stainless Steel
14	Packing Gland	ASTM A276-316SS
15	Gland Plate	300 Series Stainless Steel
16	Lever Handle	300 Series Stainless Steel
17	Lock Plate	300 Series Stainless Steel
18	Stops	300 Series Stainless Steel
19	Internal Grounding Spring	300 Series Stainless Steel
20	External Grounding Spring	300 Series Stainless Steel

Pressure/Temperature Ratings - Page M-20, Graph No. 26

DIMENSIONS

PART NO.	SIZE	A	B	C	D	E	F	G	H	J	K	L	M	N	P	WT.
86B-603-01	1/2"	0.50	3.80	0.89	5.12	3.02	2.02	1.01	1.39	1.97	0.23	0.245	0.375	1.00	10-24	2.3
86B-604-01	3/4"	0.75	4.66	1.10	5.53	3.40	2.40	1.20	1.65	2.35	0.24	0.312	0.500	1.392	1/4-20	4.0
86B-605-01	1"	1.00	5.19	1.31	6.53	4.80	2.67	1.34	1.80	2.80	0.48	0.287	0.500	1.392	1/4-20	5.7
86B-607-01	1-1/2"	1.50	5.96	1.97	6.65	4.70	3.84	1.92	2.49	3.89	0.72	0.412	0.625	1.949	5/16-18	14.4
86B-608-01	2"	2.00	6.84	2.56	8.40	5.47	4.56	2.46	3.17	4.74	0.80	0.477	0.750	1.949	5/16-18	24.4

REV. 17SEP19

aalberts integrated piping systems

86C-100 SERIES

ALLOY 20 3-PIECE FULL PORT
CLASS 600 NPT BALL VALVE

5 YEAR WARRANTY MADE IN USA

STANDARD COMPLIANCE

- Valve Design: ASME B16.34, Class 600, NACE MR0175 (2000) & MR0103 (2003), API 608
- End Connections: NPT per ASME B1.20.1
- Valve Marking: ASME B16.34
- Production Testing: ASME B16.34

FEATURES

- 3-piece construction w/ enclosed fasteners
- Full port
- Stainless steel trim & hardware
- Swing-out center section
- Pressure balanced solid ball
- Compression controlled spiral wound gaskets
- Anti-blowout one piece bottom entry stem
- Statically grounded ball, stem, & body
- Two-position locking
- Adjustable multi-piece PTFE "V" style packing
- Fully machined ISO 5211 mounting
- Cast bosses on the center-section and end caps for bleed & drain ports
- Vacuum service to 29 in of Hg.
- CE Marking, 1-1/4" and larger (add "-CE" suffix)
- 250 psig saturated steam
- Fire safe "by design" (requires -24 suffix)

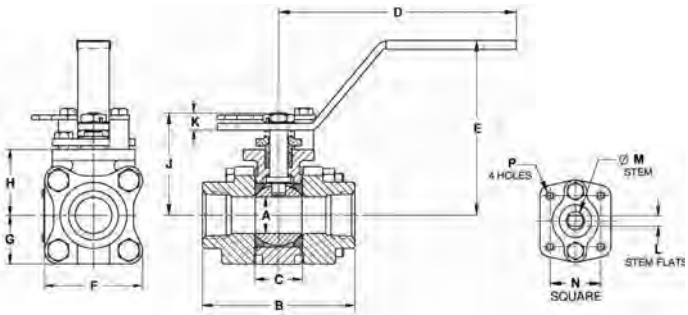

STANDARD MATERIAL LIST

	PART	MATERIAL
1	Body	ASTM A351-CN7M
2	End Caps	ASTM A351-CN7M
3	Ball	ASTM B473 (UNS N08020) or ASTM-CN7M
4	Stem	ASTM B473 (UNS N08020)
5	Seat	Multi-Seal
6	Packing	PTFE
7	Stem Bearing	PEEK/PTFE
8	Body Gasket	PTFE Spiral Wound
9	Body Bolts	ASTM A193-Gr.B8M3
10	Body Nuts	ASTM A194-Gr.8
11	Stop Bolts	18-8 Stainless Steel
12	Gland Bolts	ASTM A193-Gr.B8
13	Handle Nut/Screw	300 Series Stainless Steel
14	Packing Gland	ASTM A276-316SS
15	Gland Plate	300 Series Stainless Steel
16	Lever Handle	300 Series Stainless Steel
17	Lock Plate	300 Series Stainless Steel
18	Stops	300 Series Stainless Steel
19	Internal Grounding Spring	300 Series Stainless Steel
20	External Grounding Spring	300 Series Stainless Steel

Pressure/Temperature Ratings - Page M-21, Graph No. 27

OPTIONS AVAILABLE

(MORE INFORMATION IN SECTION J)

- Minimum quantities apply
- To specify an option, replace the "01" standard suffix with the suffix of the option.
- To specify multiple options, replace the "01" suffix with the desired suffixes in the numerical order shown below. NOTE: Not all suffixes can be combined together.

(SUFFIX)	OPTION	SIZES
-01	Standard Configuration	All
-P -01-	BSPP (Parallel) Thread Connection	All
-T -01-	BSPT (Tapered) Thread Connection	All
-04-	2-1/4" Stem Extension (Carbon Steel, Zinc Plated)	All
-14-	Vented Ball	All
-15-	Stainless Steel Locking Round Handle	All
-21-	UHMWPE Seats w/ Graphite Seals	All
-24-	Graphite Packing, Spiral Wound Graphite Body Seal, PTFE/PEEK Bearing (Fire Safe API 607, 6th Edition, ISO 10497:2010)	All
-38-	Peek Seats, Graphite Stem Packing & Gaskets	All
-49-	No Lubrication. Assembled Dry	All
-57-	Cleaned for Oxygen Service	All
-62-	Center Section Only	All
-63-	NPT x Socketweld	All
-69-	Drilled & Tapped Purge & Drains	All
-70-	4" Extended Bonnet	All
-76-	Live Loaded (Lever Operated)	All
-77-	Live Loaded (Actuated)	All
-90-	Double Packed 4" Extended Bonnet	All
-9P-	Double Packed 4" Extended Bonnet w/ Monitoring Port	All
-CE-	CE Marking	1-1/4" to 2"
-EF-	Graphite Packing (API 641 Compliant)	3/4" to 2"
-EP-	Garlock EVSP Stem Packing w/ Spiral Wound Graphite Gasket (Fire Safe by Design)	All
-KF-	PCTFE Stem Bearing	All
-SR-	Spring Return Handle	1/4" to 1"
-ZP1-	Fugitive Emissions Packing (Viton)	All
-ZP2-	Fugitive Emissions Packing (Buna-N)	All
-ZP3-	Fugitive Emissions Packing (Kalrez)	All

DIMENSIONS

PART NO.	SIZE	A	B	C	D	E	F	G	H	J	K	L	M	N	P	WT.
86C-101-01	1/4"	0.37	2.80	0.89	5.12	3.02	2.02	1.01	1.39	1.97	0.23	0.245	0.375	1.00	10-24	2.3
86C-102-01	3/8"	0.50	2.80	0.89	5.12	3.02	2.02	1.01	1.39	1.97	0.23	0.245	0.375	1.00	10-24	2.3
86C-103-01	1/2"	0.50	2.80	0.89	5.12	3.02	2.02	1.01	1.39	1.97	0.23	0.245	0.375	1.00	10-24	2.3
86C-104-01	3/4"	0.75	3.68	1.10	5.53	3.40	2.40	1.20	1.65	2.35	0.24	0.312	0.500	1.392	1/4-20	4.0
86C-105-01	1"	1.00	4.19	1.31	6.53	4.80	2.67	1.34	1.80	2.80	0.48	0.287	0.500	1.392	1/4-20	5.7
86C-106-01	1-1/4"	1.50	4.50	1.97	6.65	4.70	3.84	1.92	2.49	3.89	0.72	0.412	0.625	1.949	5/16-18	14.2
86C-107-01	1-1/2"	1.50	4.98	1.97	6.65	4.70	3.84	1.92	2.49	3.89	0.72	0.412	0.625	1.949	5/16-18	14.4
86C-108-01	2"	2.00	5.86	2.56	8.40	5.47	4.56	2.46	3.17	4.74	0.80	0.477	0.750	1.949	5/16-18	24.4

REV. 17SEP19

86C-200 SERIES

ALLOY 20 3-PIECE FULL PORT
CLASS 600 SOCKET WELD BALL VALVE

5 YEAR WARRANTY MADE IN USA

STANDARD COMPLIANCE

- Valve Design: ASME B16.34, Class 600, NACE MR0175 (2000) & MR0103 (2003), API 608
- End Connections: Socket-weld per ASME B16.11
- Valve Marking: ASME B16.34
- Production Testing: ASME B16.34

FEATURES

- 3-piece construction w/ enclosed fasteners
- Full port
- Stainless steel trim & hardware
- Swing-out center section
- Pressure balanced solid ball
- Compression controlled spiral wound gaskets
- Anti-blowout one piece bottom entry stem
- Statically grounded ball, stem, & body
- Two-position locking
- Adjustable multi-piece PTFE "V" style packing
- Fully machined ISO 5211 mounting
- Cast bosses on the center-section and end caps for bleed & drain ports
- Fire safe "by design" (requires -24 suffix)
- Vacuum service to 29 in of Hg.
- CE Marking, 1-1/4" and larger (add "-CE" suffix)
- 250 psig saturated steam

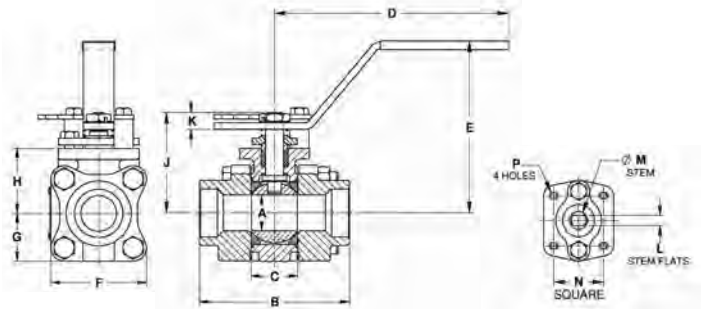

STANDARD MATERIAL LIST

	PART	MATERIAL
1	Body	ASTM A351-CN7M
2	End Caps	ASTM A351-CN7M
3	Ball	ASTM B473 (UNS N08020) or ASTM-CN7M
4	Stem	ASTM B473 (UNS N08020)
5	Seat	Multi-Seal
6	Packing	PTFE
7	Stem Bearing	PEEK/PTFE
8	Body Gasket	PTFE Spiral Wound
9	Body Bolts	ASTM A193-Gr.B8M3
10	Body Nuts	ASTM A194-Gr.8
11	Stop Bolts	18-8 Stainless Steel
12	Gland Bolts	ASTM A193-Gr.B8
13	Handle Nut/Screw	300 Series Stainless Steel
14	Packing Gland	ASTM A276-316SS
15	Gland Plate	300 Series Stainless Steel
16	Lever Handle	300 Series Stainless Steel
17	Lock Plate	300 Series Stainless Steel
18	Stops	300 Series Stainless Steel
19	Internal Grounding Spring	300 Series Stainless Steel
20	External Grounding Spring	300 Series Stainless Steel

OPTIONS AVAILABLE

(MORE INFORMATION IN SECTION J)

- Minimum quantities apply
- To specify an option, replace the "01" standard suffix with the suffix of the option.
- To specify multiple options, replace the "01" suffix with the desired suffixes in the numerical order shown below. NOTE: Not all suffixes can be combined together.

(SUFFIX)	OPTION	SIZES
-01	Standard Configuration	All
-04-	2-1/4" Stem Extension (Carbon Steel, Zinc Plated)	All
-14-	Vented Ball	All
-15-	Stainless Steel Locking Round Handle	All
-21-	UHMWPE Seats w/ Graphite Seals	All
-24-	Graphite Packing, Spiral Wound Graphite Body Seal, PTFE/PEEK Bearing (Fire Safe by Design)	All
-38-	Peek Seats, Graphite Stem Packing & Gaskets	All
-49-	No Lubrication. Assembled Dry	All
-57-	Cleaned for Oxygen Service	All
-62-	Center Section Only	All
-69-	Drilled & Tapped Purge & Drains	All
-70-	4" Extended Bonnet	All
-76-	Live Loaded (Lever Operated)	All
-77-	Live Loaded (Actuated)	All
-90-	Double Packed 4" Extended Bonnet	All
-9P-	Double Packed 4" Extended Bonnet w/ Monitoring Port	All
-CE-	CE Marking	1-1/4" to 2"
-EF-	Graphite Packing (API 641 Compliant)	3/4" to 2"
-EP-	Garlock EVSP Stem Packing w/ Spiral Wound Graphite Gasket (Fire Safe by Design)	All
-KF-	PCTFE Stem Bearing	All
-SR-	Spring Return Handle	1/4" to 1"
-ZP1-	Fugitive Emissions Packing (Viton)	All
-ZP2-	Fugitive Emissions Packing (Buna-N)	All
-ZP3-	Fugitive Emissions Packing (Kalrez)	All

Pressure/Temperature Ratings - Page M-21, Graph No. 27

DIMENSIONS

PART NO.	SIZE	A	B	C	D	E	F	G	H	J	K	L	M	N	P	WT.
86C-201-01	1/4"	0.37	2.80	0.89	5.12	3.02	2.02	1.01	1.39	1.97	0.23	0.245	0.375	1.00	10-24	2.3
86C-202-01	3/8"	0.50	2.80	0.89	5.12	3.02	2.02	1.01	1.39	1.97	0.23	0.245	0.375	1.00	10-24	2.3
86C-203-01	1/2"	0.50	2.80	0.89	5.12	3.02	2.02	1.01	1.39	1.97	0.23	0.245	0.375	1.00	10-24	2.3
86C-204-01	3/4"	0.75	3.68	1.10	5.53	3.40	2.40	1.20	1.65	2.35	0.24	0.312	0.500	1.392	1/4-20	4.0
86C-205-01	1"	1.00	4.19	1.31	6.53	4.80	2.67	1.34	1.80	2.80	0.48	0.287	0.500	1.392	1/4-20	5.7
86C-206-01	1-1/4"	1.50	4.50	1.97	6.65	4.70	3.84	1.92	2.49	3.89	0.72	0.412	0.625	1.949	5/16-18	14.2
86C-207-01	1-1/2"	1.50	4.98	1.97	6.65	4.70	3.84	1.92	2.49	3.89	0.72	0.412	0.625	1.949	5/16-18	14.4
86C-208-01	2"	2.00	5.86	2.56	8.40	5.47	4.56	2.46	3.17	4.74	0.80	0.477	0.750	1.949	5/16-18	24.4

REV. 17SEP19

aalberts integrated piping systems

86C-300 SERIES

ALLOY 20 3-PIECE FULL PORT
CLASS 600 SCH. 5 BUTT WELD BALL VALVE

5 YEAR WARRANTY MADE IN USA

STANDARD COMPLIANCE

- Valve Design: ASME B16.34, Class 600, NACE MR0175 (2000) & MR0103 (2003), API 608
- End Connections: Butt-Weld per ASME B16.25
- Valve Marking: ASME B16.34
- Production Testing: ASME B16.34

FEATURES

- 3-piece construction w/ enclosed fasteners
- Full port
- Stainless steel trim & hardware
- Swing-out center section
- Pressure balanced solid ball
- Compression controlled spiral wound gaskets
- Anti-blowout one piece bottom entry stem
- Statically grounded ball, stem, & body
- Two-position locking
- Adjustable multi-piece PTFE "V" style packing
- Fully machined ISO 5211 mounting
- Cast bosses on the center-section and end caps for bleed & drain ports
- Fire safe "by design" (requires -24 suffix)
- Vacuum service to 29 in of Hg.
- CE Marking, 1-1/2" and larger (add "-CE" suffix)
- 250 psig saturated steam

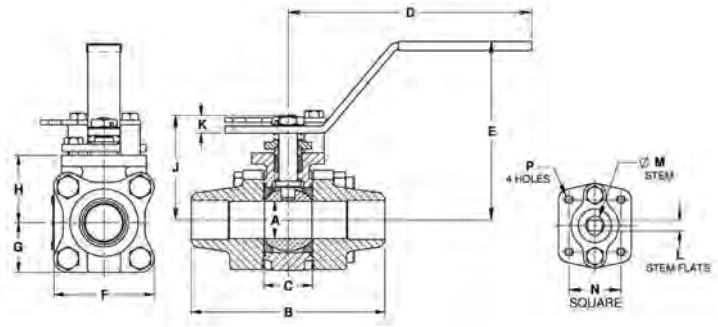

VARIATIONS AVAILABLE

- 86C-400 Schedule 10 Butt-Weld
- 86C-500 Schedule 40 Butt-Weld
- 86C-600 Schedule 80 Butt-Weld

OPTIONS AVAILABLE

(MORE INFORMATION IN SECTION J)

- Minimum quantities apply
- To specify an option, replace the "01" standard suffix with the suffix of the option.
- To specify multiple options, replace the "01" suffix with the desired suffixes in the numerical order shown below. NOTE: Not all suffixes can be combined together.

(SUFFIX)	OPTION	SIZES
-01	Standard Configuration	All
-04-	2-1/4" Stem Extension (Carbon Steel, Zinc Plated)	All
-14-	Vented Ball	All
-15-	Stainless Steel Locking Round Handle	All
-21-	UHMWPE Seats w/ Graphite Seals	All
-24-	Graphite Packing, Spiral Wound Graphite Body Seal, PTFE/PEEK Bearing (Fire Safe by Design)	All
-38-	Peek Seats, Graphite Stem Packing & Gaskets	All
-49-	No Lubrication. Assembled Dry	All
-57-	Cleaned for Oxygen Service	All
-62-	Center Section Only	All
-66-	FNPT x Buttweld	All
-69-	Drilled & Tapped Purge & Drains	All
-70-	4" Extended Bonnet	All
-76-	Live Loaded (Lever Operated)	All
-77-	Live Loaded (Actuated)	All
-90-	Double Packed 4" Extended Bonnet	All
-9P-	Double Packed 4" Extended Bonnet w/ Monitoring Port	All"
-CE-	CE Marking	1-1/2" to 2"
-EF-	Graphite Packing (API 641 Compliant)	3/4" to 2"
-EP-	Garlock EVSP Stem Packing w/ Spiral Wound Graphite Gasket (Fire Safe by Design)	All
-KF-	PCTFE Stem Bearing	All
-SR-	Spring Return Handle	1/2" to 1"
-ZP1-	Fugitive Emissions Packing (Viton)	All
-ZP2-	Fugitive Emissions Packing (Buna-N)	All
-ZP3-	Fugitive Emissions Packing (Kalrez)	All

Pressure/Temperature Ratings - Page M-21, Graph No. 27

STANDARD MATERIAL LIST

	PART	MATERIAL
1	Body	ASTM A351-CN7M
2	End Caps	ASTM A351-CN7M
3	Ball	ASTM (UNS N08020) or ASTM-CN7M
4	Stem	ASTM B473 (UNS N08020)
5	Seat	Multi-Seal
6	Packing	PTFE
7	Stem Bearing	PEEK/PTFE
8	Body Gasket	PTFE Spiral Wound
9	Body Bolts	ASTM A193-Gr.B8M3
10	Body Nuts	ASTM A194-Gr.8
11	Stop Bolts	18-8 Stainless Steel
12	Gland Bolts	ASTM A193-Gr.B8
13	Handle Nut/Screw	300 Series Stainless Steel
14	Packing Gland	ASTM A276-316SS
15	Gland Plate	300 Series Stainless Steel
16	Lever Handle	300 Series Stainless Steel
17	Lock Plate	300 Series Stainless Steel
18	Stops	300 Series Stainless Steel
19	Internal Grounding Spring	300 Series Stainless Steel
20	External Grounding Spring	300 Series Stainless Steel

DIMENSIONS

PART NO.	SIZE	A	B	C	D	E	F	G	H	J	K	L	M	N	P	WT.
86C-303-01	1/2"	0.50	3.80	0.89	5.12	3.02	2.02	1.01	1.39	1.97	0.23	0.245	0.375	1.00	10-24	2.3
86C-304-01	3/4"	0.75	4.66	1.10	5.53	3.40	2.40	1.20	1.65	2.35	0.24	0.312	0.500	1.392	1/4-20	4.0
86C-305-01	1"	1.00	5.19	1.31	6.53	4.80	2.67	1.34	1.80	2.80	0.48	0.287	0.500	1.392	1/4-20	5.7
86C-307-01	1-1/2"	1.50	5.96	1.97	6.65	4.70	3.84	1.92	2.49	3.89	0.72	0.412	0.625	1.949	5/16-18	14.4
86C-308-01	2"	2.00	6.84	2.56	8.40	5.47	4.56	2.46	3.17	4.74	0.80	0.477	0.750	1.949	5/16-18	24.4

REV. 17SEP19

86C-400 SERIES

ALLOY 20 3-PIECE FULL PORT
CLASS 600 SCH. 10 BUTT WELD BALL VALVE

5 YEAR WARRANTY MADE IN USA

STANDARD COMPLIANCE

- Valve Design: ASME B16.34, Class 600, NACE MR0175 (2000) & MR0103 (2003), API 608
- End Connections: Butt-Weld per ASME B16.25
- Valve Marking: ASME B16.34
- Production Testing: ASME B16.34

FEATURES

- 3-piece construction w/ enclosed fasteners
- Full port
- Stainless steel trim & hardware
- Swing-out center section
- Pressure balanced solid ball
- Compression controlled spiral wound gaskets
- Anti-blowout one piece bottom entry stem
- Statically grounded ball, stem, & body
- Two-position locking
- Adjustable multi-piece PTFE "V" style packing
- Fully machined ISO 5211 mounting
- Cast bosses on the center-section and end caps for bleed & drain ports
- Fire safe "by design" (requires -24 suffix)
- Vacuum service to 29 in of Hg.
- CE Marking, 1-1/2" and larger (add "-CE" suffix)
- 250 psig saturated steam

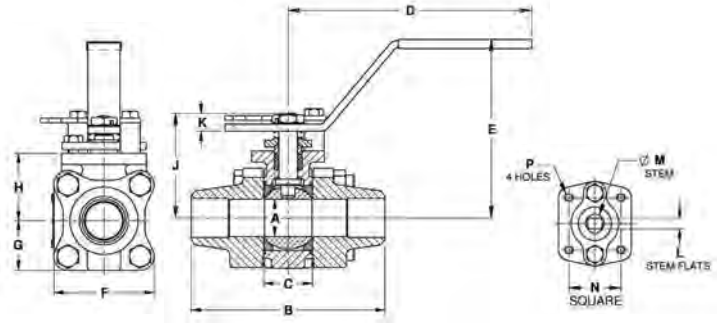

VARIATIONS AVAILABLE

- 86C-300 Schedule 5 Butt-Weld
- 86C-500 Schedule 40 Butt-Weld
- 86C-600 Schedule 80 Butt-Weld

OPTIONS AVAILABLE

(MORE INFORMATION IN SECTION J)

- Minimum quantities apply
- To specify an option, replace the "01" standard suffix with the suffix of the option.
- To specify multiple options, replace the "01" suffix with the desired suffixes in the numerical order shown below. NOTE: Not all suffixes can be combined together.

(SUFFIX)	OPTION	SIZES
-01	Standard Configuration	All
-04-	2-1/4" Stem Extension (Carbon Steel, Zinc Plated)	All
-14-	Vented Ball	All
-15-	Stainless Steel Locking Round Handle	All
-21-	UHMWPE Seats w/ Graphite Seals	All
-24-	Graphite Packing, Spiral Wound Graphite Body Seal, PTFE/PEEK Bearing (Fire Safe by Design)	All
-38-	Peek Seats, Graphite Stem Packing & Gaskets	All
-49-	No Lubrication. Assembled Dry	All
-57-	Cleaned for Oxygen Service	All
-62-	Center Section Only	All
-66-	FNPT x Buttweld	All
-69-	Drilled & Tapped Purge & Drains	All
-70-	4" Extended Bonnet	All
-76-	Live Loaded (Lever Operated)	All
-77-	Live Loaded (Actuated)	All
-90-	Double Packed 4" Extended Bonnet	All
-9P-	Double Packed 4" Extended Bonnet w/ Monitoring Port	All
-EF-	Graphite Packing (API 641 Compliant)	3/4" to 2"
-CE-	CE Marking	1-1/2" to 2"
-EP-	Garlock EVSP Stem Packing w/ Spiral Wound Graphite Gasket (Fire Safe by Design)	All
-KF-	PCTFE Stem Bearing	All
-SR-	Spring Return Handle	1/2" to 1"
-ZP1-	Fugitive Emissions Packing (Viton)	All
-ZP2-	Fugitive Emissions Packing (Buna-N)	All
-ZP3-	Fugitive Emissions Packing (Kalrez)	All

Pressure/Temperature Ratings - Page M-21, Graph No. 27

STANDARD MATERIAL LIST

	PART	MATERIAL
1	Body	ASTM A351-CN7M
2	End Caps	ASTM A351-CN7M
3	Ball	ASTM (UNS N08020) or ASTM-CN7M
4	Stem	ASTM B473 (UNS N08020)
5	Seat	Multi-Seal
6	Packing	PTFE
7	Stem Bearing	PEEK/PTFE
8	Body Gasket	PTFE Spiral Wound
9	Body Bolts	ASTM A193-Gr.B8M3
10	Body Nuts	ASTM A194-Gr.8
11	Stop Bolts	18-8 Stainless Steel
12	Gland Bolts	ASTM A193-Gr.B8
13	Handle Nut/Screw	300 Series Stainless Steel
14	Packing Gland	ASTM A276-316SS
15	Gland Plate	300 Series Stainless Steel
16	Lever Handle	300 Series Stainless Steel
17	Lock Plate	300 Series Stainless Steel
18	Stops	300 Series Stainless Steel
19	Internal Grounding Spring	300 Series Stainless Steel
20	External Grounding Spring	300 Series Stainless Steel

DIMENSIONS

PART NO.	SIZE	A	B	C	D	E	F	G	H	J	K	L	M	N	P	WT.
86C-403-01	1/2"	0.50	3.80	0.89	5.12	3.02	2.02	1.01	1.39	1.97	0.23	0.245	0.375	1.00	10-24	2.3
86C-404-01	3/4"	0.75	4.66	1.10	5.53	3.40	2.40	1.20	1.65	2.35	0.24	0.312	0.500	1.392	1/4-20	4.0
86C-405-01	1"	1.00	5.19	1.31	6.53	4.80	2.67	1.34	1.80	2.80	0.48	0.287	0.500	1.392	1/4-20	5.7
86C-407-01	1-1/2"	1.50	5.96	1.97	6.65	4.70	3.84	1.92	2.49	3.89	0.72	0.412	0.625	1.949	5/16-18	14.4
86C-408-01	2"	2.00	6.84	2.56	8.40	5.47	4.56	2.46	3.17	4.74	0.80	0.477	0.750	1.949	5/16-18	24.4

REV. 17SEP19

aalberts integrated piping systems

86C-500 SERIES

ALLOY 20 3-PIECE FULL PORT
CLASS 600 SCH. 40 BUTT WELD BALL VALVE

5 YEAR WARRANTY MADE IN USA

STANDARD COMPLIANCE

- Valve Design: ASME B16.34, Class 600, NACE MR0175 (2000) & MR0103 (2003), API 608
- End Connections: Butt-Weld per ASME B16.25
- Valve Marking: ASME B16.34
- Production Testing: ASME B16.34

FEATURES

- 3-piece construction w/ enclosed fasteners
- Full port
- Stainless steel trim & hardware
- Swing-out center section
- Pressure balanced solid ball
- Compression controlled spiral wound gaskets
- Anti-blowout one piece bottom entry stem
- Statically grounded ball, stem, & body
- Two-position locking
- Adjustable multi-piece PTFE "V" style packing
- Fully machined ISO 5211 mounting
- Cast bosses on the center-section and end caps for bleed & drain ports
- Fire safe "by design" (requires -24 suffix)
- Vacuum service to 29 in of Hg.
- CE Marking, 1-1/2" and larger (add "-CE" suffix)
- 250 psig saturated steam

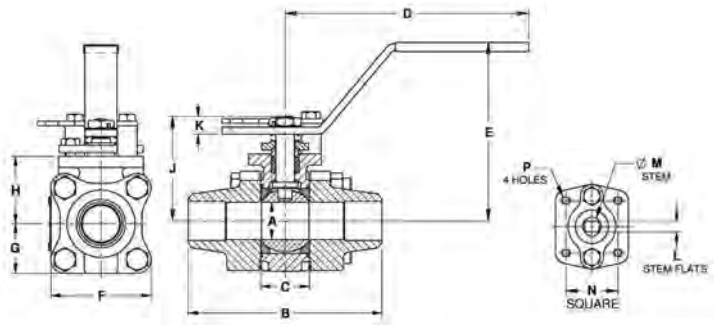

VARIATIONS AVAILABLE

- 86C-300 Schedule 5 Butt-Weld
- 86C-400 Schedule 10 Butt-Weld
- 86C-600 Schedule 80 Butt-Weld

OPTIONS AVAILABLE

(MORE INFORMATION IN SECTION J)

- Minimum quantities apply
- To specify an option, replace the "01" standard suffix with the suffix of the option.
- To specify multiple options, replace the "01" suffix with the desired suffixes in the numerical order shown below. NOTE: Not all suffixes can be combined together.

(SUFFIX)	OPTION	SIZES
-01	Standard Configuration	All
-04-	2-1/4" Stem Extension (Carbon Steel, Zinc Plated)	All
-14-	Vented Ball	All
-15-	Stainless Steel Locking Round Handle	All
-21-	UHMWPE Seats w/ Graphite Seals	All
-24-	Graphite Packing, Spiral Wound Graphite Body Seal, PTFE/PEEK Bearing (Fire Safe by Design)	All
-38-	Peek Seats, Graphite Stem Packing & Gaskets	All
-49-	No Lubrication. Assembled Dry	All
-57-	Cleaned for Oxygen Service	All
-62-	Center Section Only	All
-66-	FNPT x Buttweld	All
-69-	Drilled & Tapped Purge & Drains	All
-70-	4" Extended Bonnet	All
-76-	Live Loaded (Lever Operated)	All
-77-	Live Loaded (Actuated)	All
-90-	Double Packed 4" Extended Bonnet	All
-9P-	Double Packed 4" Extended Bonnet w/ Monitoring Port	All
-CE-	CE Marking	1-1/2" to 2"
-EF-	Graphite Packing (API 641 Compliant)	3/4" to 2"
-EP-	Garlock EVSP Stem Packing w/ Spiral Wound Graphite Gasket (Fire Safe by Design)	All
-KF-	PCTFE Stem Bearing	All
-SR-	Spring Return Handle	1/2" to 1"
-ZP1-	Fugitive Emissions Packing (Viton)	All
-ZP2-	Fugitive Emissions Packing (Buna-N)	All
-ZP3-	Fugitive Emissions Packing (Kalrez)	All

Pressure/Temperature Ratings - Page M-21, Graph No. 27

STANDARD MATERIAL LIST

	PART	MATERIAL
1	Body	ASTM A351-CN7M
2	End Caps	ASTM A351-CN7M
3	Ball	ASTM (UNS N08020) or ASTM-CN7M
4	Stem	ASTM B473 (UNS N08020)
5	Seat	Multi-Seal
6	Packing	PTFE
7	Stem Bearing	PEEK/PTFE
8	Body Gasket	PTFE Spiral Wound
9	Body Bolts	ASTM A193-Gr.B8M3
10	Body Nuts	ASTM A194-Gr.8
11	Stop Bolts	18-8 Stainless Steel
12	Gland Bolts	ASTM A193-Gr.B8
13	Handle Nut/Screw	300 Series Stainless Steel
14	Packing Gland	ASTM A276-316SS
15	Gland Plate	300 Series Stainless Steel
16	Lever Handle	300 Series Stainless Steel
17	Lock Plate	300 Series Stainless Steel
18	Stops	300 Series Stainless Steel
19	Internal Grounding Spring	300 Series Stainless Steel
20	External Grounding Spring	300 Series Stainless Steel

DIMENSIONS

PART NO.	SIZE	A	B	C	D	E	F	G	H	J	K	L	M	N	P	WT.
86C-503-01	1/2"	0.50	3.80	0.89	5.12	3.02	2.02	1.01	1.39	1.97	0.23	0.245	0.375	1.00	10-24	2.3
86C-504-01	3/4"	0.75	4.66	1.10	5.53	3.40	2.40	1.20	1.65	2.35	0.24	0.312	0.500	1.392	1/4-20	4.0
86C-505-01	1"	1.00	5.19	1.31	6.53	4.80	2.67	1.34	1.80	2.80	0.48	0.287	0.500	1.392	1/4-20	5.7
86C-507-01	1-1/2"	1.50	5.96	1.97	6.65	4.70	3.84	1.92	2.49	3.89	0.72	0.412	0.625	1.949	5/16-18	14.4
86C-508-01	2"	2.00	6.84	2.56	8.40	5.47	4.56	2.46	3.17	4.74	0.80	0.477	0.750	1.949	5/16-18	24.4

REV. 17SEP19

86C-600 SERIES

ALLOY 20 3-PIECE FULL PORT
CLASS 600 SCH. 80 BUTT WELD BALL VALVE

5 YEAR WARRANTY MADE IN USA

STANDARD COMPLIANCE

- Valve Design: ASME B16.34, Class 600, NACE MR0175 (2000) & MR0103 (2003), API 608
- End Connections: Butt-Weld per ASME B16.25
- Valve Marking: ASME B16.34
- Production Testing: ASME B16.34

FEATURES

- 3-piece construction w/ enclosed fasteners
- Full port
- Stainless steel trim & hardware
- Swing-out center section
- Pressure balanced solid ball
- Compression controlled spiral wound gaskets
- Anti-blowout one piece bottom entry stem
- Statically grounded ball, stem, & body
- Two-position locking
- Adjustable multi-piece PTFE "V" style packing
- Fully machined ISO 5211 mounting
- Cast bosses on the center-section and end caps for bleed & drain ports
- Fire safe "by design" (requires -24 suffix)
- Vacuum service to 29 in of Hg.
- CE Marking, 1-1/2" and larger (add "-CE" suffix)
- 250 psig saturated steam

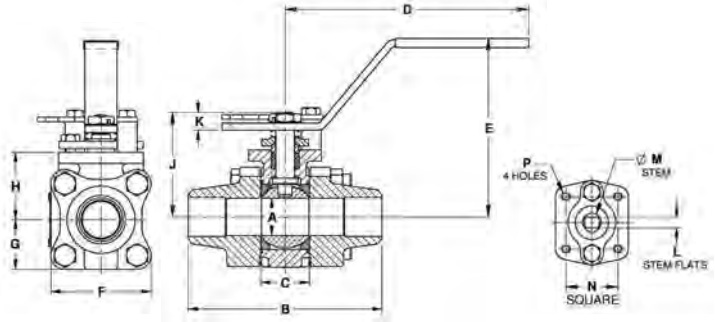

VARIATIONS AVAILABLE

- 86C-300 Schedule 5 Butt-Weld
- 86C-400 Schedule 10 Butt-Weld
- 86C-500 Schedule 40 Butt-Weld

OPTIONS AVAILABLE

(MORE INFORMATION IN SECTION J)

- Minimum quantities apply
- To specify an option, replace the "01" standard suffix with the suffix of the option.
- To specify multiple options, replace the "01" suffix with the desired suffixes in the numerical order shown below. NOTE: Not all suffixes can be combined together.

(SUFFIX)	OPTION	SIZES
-01	Standard Configuration	All
-04-	2-1/4" Stem Extension (Carbon Steel, Zinc Plated)	All
-14-	Vented Ball	All
-15-	Stainless Steel Locking Round Handle	All
-21-	UHMWPE Seats w/ Graphite Seals	All
-24-	Graphite Packing, Spiral Wound Graphite Body Seal, PTFE/PEEK Bearing (Fire Safe by Design)	All
-38-	Peek Seats, Graphite Stem Packing & Gaskets	All
-49-	No Lubrication. Assembled Dry	All
-57-	Cleaned for Oxygen Service	All
-62-	Center Section Only	All
-66-	FNPT x Buttweld	All
-69-	Drilled & Tapped Purge & Drains	All
-70-	4" Extended Bonnet	All
-76-	Live Loaded (Lever Operated)	All
-77-	Live Loaded (Actuated)	All
-90-	Double Packed 4" Extended Bonnet	All
-9P-	Double Packed 4" Extended Bonnet w/ Monitoring Port	All
-CE-	CE Marking	1-1/2" to 2"
-EF-	Graphite Packing (API 641 Compliant)	3/4" to 2"
-EP-	Garlock EVSP Stem Packing w/ Spiral Wound Graphite Gasket (Fire Safe by Design)	All
-KF-	PCTFE Stem Bearing	All
-SR-	Spring Return Handle	1/2" to 1"
-ZP1-	Fugitive Emissions Packing (Viton)	All
-ZP2-	Fugitive Emissions Packing (Buna-N)	All
-ZP3-	Fugitive Emissions Packing (Kalrez)	All

Pressure/Temperature Ratings - Page M-21, Graph No. 27

STANDARD MATERIAL LIST

	PART	MATERIAL
1	Body	ASTM A351-CN7M
2	End Caps	ASTM A351-CN7M
3	Ball	ASTM (UNS N08020) or ASTM-CN7M
4	Stem	ASTM B473 (UNS N08020)
5	Seat	Multi-Seal
6	Packing	PTFE
7	Stem Bearing	PEEK/PTFE
8	Body Gasket	PTFE Spiral Wound
9	Body Bolts	ASTM A193-Gr.B8M3
10	Body Nuts	ASTM A194-Gr.8
11	Stop Bolts	18-8 Stainless Steel
12	Gland Bolts	ASTM A193-Gr.B8
13	Handle Nut/Screw	300 Series Stainless Steel
14	Packing Gland	ASTM A276-316SS
15	Gland Plate	300 Series Stainless Steel
16	Lever Handle	300 Series Stainless Steel
17	Lock Plate	300 Series Stainless Steel
18	Stops	300 Series Stainless Steel
19	Internal Grounding Spring	300 Series Stainless Steel
20	External Grounding Spring	300 Series Stainless Steel

DIMENSIONS

PART NO.	SIZE	A	B	C	D	E	F	G	H	J	K	L	M	N	P	WT.
86C-603-01	1/2"	0.50	3.80	0.89	5.12	3.02	2.02	1.01	1.39	1.97	0.23	0.245	0.375	1.00	10-24	2.3
86C-604-01	3/4"	0.75	4.66	1.10	5.53	3.40	2.40	1.20	1.65	2.35	0.24	0.312	0.500	1.392	1/4-20	4.0
86C-605-01	1"	1.00	5.19	1.31	6.53	4.80	2.67	1.34	1.80	2.80	0.48	0.287	0.500	1.392	1/4-20	5.7
86C-607-01	1-1/2"	1.50	5.96	1.97	6.65	4.70	3.84	1.92	2.49	3.89	0.72	0.412	0.625	1.949	5/16-18	14.4
86C-608-01	2"	2.00	6.84	2.56	8.40	5.47	4.56	2.46	3.17	4.74	0.80	0.477	0.750	1.949	5/16-18	24.4

REV. 17SEP19

aalberts integrated piping systems

86D-100 SERIES

HASTELLOY® C 3-PIECE FULL PORT
CLASS 600 NPT BALL VALVE

5 YEAR WARRANTY MADE IN USA

STANDARD COMPLIANCE

- Valve Design: ASME B16.34, Class 600, NACE MR0175 (2000) & MR0103 (2003), API 608
- End Connections: NPT per ASME B1.20.1
- Valve Marking: ASME B16.34
- Production Testing: ASME B16.34

FEATURES

- 3-piece construction w/ enclosed fasteners
- Full port
- Stainless steel trim & hardware
- Swing-out center section
- Pressure balanced solid ball
- Compression controlled spiral wound gaskets
- Anti-blowout one piece bottom entry stem
- Statically grounded ball, stem, & body
- Two-position locking
- Adjustable multi-piece PTFE "V" style packing
- Fully machined ISO 5211 mounting
- Cast bosses on the center-section and end caps for bleed & drain ports
- Fire safe "by design" (requires -24 suffix)
- Vacuum service to 29 in of Hg.
- CE Marking, 1-1/4" and larger (add "-CE" suffix)
- 250 psig saturated steam

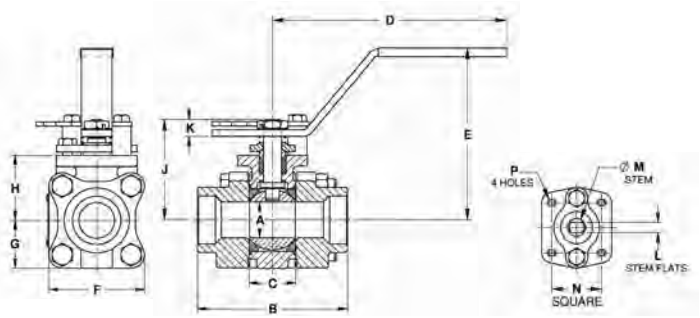

OPTIONS AVAILABLE

(MORE INFORMATION IN SECTION J)

- Minimum quantities apply
- To specify an option, replace the "01" standard suffix with the suffix of the option.
- To specify multiple options, replace the "01" suffix with the desired suffixes in the numerical order shown below. NOTE: Not all suffixes can be combined together.

(SUFFIX)	OPTION	SIZES
-01	Standard Configuration	All
-04-	2-1/4" Stem Extension (Carbon Steel, Zinc Plated)	All
-14-	Vented Ball	All
-15-	Stainless Steel Locking Round Handle	All
-21-	UHMWPE Seats w/ Graphite Seals	All
-24-	Graphite Packing, Spiral Wound Graphite Body Seal, PTFE/PEEK Bearing (Fire Safe by Design)	All
-26-	Chlorine Service. Vented. Special Cleaning. Assembled Dry. (for CS, HC, & Monel only)	All
-38-	Peek Seats, Graphite Stem Packing & Gaskets	All
-49-	No Lubrication. Assembled Dry	All
-57-	Cleaned for Oxygen Service	All
-62-	Center Section Only	All
-63-	NPT x Socketweld	All
-69-	Drilled & Tapped Purge & Drains	All
-70-	4" Extended Bonnet	All
-76-	Live Loaded (Lever Operated)	All
-77-	Live Loaded (Actuated)	All
-90-	Double Packed 4" Extended Bonnet	All
-9P-	Double Packed 4" Extended Bonnet w/ Monitoring Port	All
-CE-	CE Marking	1-1/4" to 2"
-EF-	Graphite Packing (API 641 Compliant)	3/4" to 2"
-EP-	Garlock EVSP Stem Packing w/ Spiral Wound Graphite Gasket (Fire Safe by Design)	All
-KF-	PCTFE Stem Bearing	All
-SR-	Spring Return Handle	1/2" to 1"
-ZP1-	Fugitive Emissions Packing (Viton)	All
-ZP2-	Fugitive Emissions Packing (Buna-N)	All
-ZP3-	Fugitive Emissions Packing (Kalrez)	All

STANDARD MATERIAL LIST

	PART	MATERIAL
1	Body	ASTM A494-CW12MW
2	End Caps	ASTM A494-CW12MW
3	Ball	ASTM B574-C276
4	Stem	ASTM B574-C276
5	Seat	Multi-Seal
6	Packing	PTFE
7	Stem Bearing	PEEK/PTFE
8	Body Gasket	PTFE/HC Spiral Wound
9	Body Bolts	ASTM A193-Gr. B8M3
10	Body Nuts	ASTM A194-Gr. 8
11	Stop Bolts	18-8 Stainless Steel
12	Gland Bolts	ASTM A193-Gr. B8
13	Handle Nut/Screw	300 Series Stainless Steel
14	Packing Gland	ASTM A276-316SS
15	Gland Plate	300 Series Stainless Steel
16	Lever Handle	300 Series Stainless Steel
17	Lock Plate	300 Series Stainless Steel
18	Stops	300 Series Stainless Steel
19	Grounding Springs	300 Series Stainless Steel

Pressure/Temperature Ratings - Page M-21, Graph No. 28

DIMENSIONS

PART NO.	SIZE	A	B	C	D	E	F	G	H	J	K	L	M	N	P	WT.
86D-101-01	1/4"	0.37	2.80	0.89	5.12	3.02	2.02	1.01	1.39	1.97	0.23	0.245	0.375	1.000	10-24	2.3
86D-102-01	3/8"	0.50	2.80	0.89	5.12	3.02	2.02	1.01	1.39	1.97	0.23	0.245	0.375	1.000	10-24	2.3
86D-103-01	1/2"	0.50	2.80	0.89	5.12	3.02	2.02	1.01	1.39	1.97	0.23	0.245	0.375	1.000	10-24	2.3
86D-104-01	3/4"	0.75	3.68	1.10	5.53	3.40	2.40	1.20	1.65	2.35	0.24	0.312	0.500	1.392	1/4-20	4.0
86D-105-01	1"	1.00	4.19	1.31	6.53	4.80	2.67	1.34	1.80	2.80	0.48	0.287	0.500	1.392	1/4-20	5.7
86D-106-01	1-1/4"	1.50	4.50	1.97	6.65	4.70	3.84	1.92	2.49	3.89	0.72	0.412	0.625	1.949	5/16-18	14.2
86D-107-01	1-1/2"	1.50	4.98	1.97	6.65	4.70	3.84	1.92	2.49	3.89	0.72	0.412	0.625	1.949	5/16-18	14.4
86D-108-01	2"	2.00	5.86	2.56	8.40	5.47	4.56	2.46	3.17	4.74	0.80	0.477	0.750	1.949	5/16-18	27.6

REV. 17SEP19

86D-200 SERIES

HASTELLOY® C 3-PIECE FULL PORT
CLASS 600 SOCKET WELD BALL VALVE

5 YEAR WARRANTY MADE IN USA

STANDARD COMPLIANCE

- Valve Design: ASME B16.34, Class 600, NACE MR0175 (2000) & MR0103 (2003), API 608
- End Connections: Socket-weld per ASME B16.11
- Valve Marking: ASME B16.34
- Production Testing: ASME B16.34

FEATURES

- 3-piece construction w/ enclosed fasteners
- Full port
- Stainless steel trim & hardware
- Swing-out center section
- Pressure balanced solid ball
- Compression controlled spiral wound gaskets
- Anti-blowout one piece bottom entry stem
- Statically grounded ball, stem, & body
- Two-position locking handle
- Adjustable multi-piece PTFE "V" style packing
- Fully machined ISO 5211 mounting
- Cast bosses on the center-section and end caps for bleed & drain ports
- Fire safe "by design" (requires -24 suffix)
- Vacuum service to 29 in of Hg.
- CE Marking, 1-1/4" and larger (add "-CE" suffix)
- 250 psig saturated steam

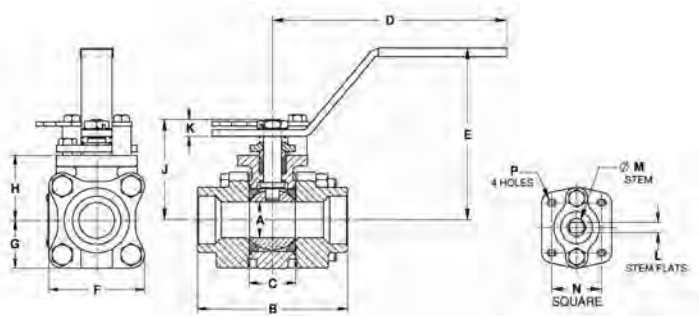

STANDARD MATERIAL LIST

	PART	MATERIAL
1	Body	ASTM A494-CW12MW
2	End Caps	ASTM A494-CW12MW
3	Ball	ASTM B574-C276
4	Stem	ASTM B574-C276
5	Seat	Multi-Seal
6	Packing	PTFE
7	Stem Bearing	PEEK/PTFE
8	Body Gasket	PTFE/HC Spiral Wound
9	Body Bolts	ASTM A193-Gr.B8M3
10	Body Nuts	ASTM A194-Gr.8
11	Stop Bolts	18-8 Stainless Steel
12	Gland Bolts	ASTM A193-Gr.B8
13	Handle Nut/Screw	300 Series Stainless Steel
14	Packing Gland	ASTM A276-316SS
15	Gland Plate	300 Series Stainless Steel
16	Lever Handle	300 Series Stainless Steel
17	Lock Plate	300 Series Stainless Steel
18	Stops	300 Series Stainless Steel
19	Internal Grounding Spring	ASTM B574-C276
20	External Grounding Spring	300 Series Stainless Steel

OPTIONS AVAILABLE

(MORE INFORMATION IN SECTION J)

- Minimum quantities apply
- To specify an option, replace the "01" standard suffix with the suffix of the option.
- To specify multiple options, replace the "01" suffix with the desired suffixes in the numerical order shown below. NOTE: Not all suffixes can be combined together.

(SUFFIX)	OPTION	SIZES
-01	Standard Configuration	All
-04-	2-1/4" Stem Extension (Carbon Steel, Zinc Plated)	All
-14-	Vented Ball	All
-15-	Stainless Steel Locking Round Handle	All
-21-	UHMWPE Seats w/ Graphite Seals	All
-24-	Graphite Packing, Spiral Wound Graphite Body Seal, PTFE/PEEK Bearing (Fire Safe by Design)	All
-26-	Chlorine Service. Vented. Special Cleaning. Assembled Dry. (for CS, HC, & Monel only)	All
-38-	Peek Seats, Graphite Stem Packing & Gaskets	All
-49-	No Lubrication. Assembled Dry	All
-57-	Cleaned for Oxygen Service	All
-62-	Center Section Only	All
-69-	Drilled & Tapped Purge & Drains	All
-70-	4" Extended Bonnet	All
-76-	Live Loaded (Lever Operated)	All
-77-	Live Loaded (Actuated)	All
-90-	Double Packed 4" Extended Bonnet	All
-9P-	Double Packed 4" Extended Bonnet w/ Monitoring Port	All
-CE-	CE Marking	1-1/4" to 2"
-EF-	Graphite Packing (API 641 Compliant)	3/4" to 2"
-EP-	Garlock EVSP Stem Packing w/ Spiral Wound Graphite Gasket (Fire Safe by Design)	All
-KF-	PCTFE Stem Bearing	All
-SR-	Spring Return Handle	1/4" to 1"
-ZP1-	Fugitive Emissions Packing (Viton)	All
-ZP2-	Fugitive Emissions Packing (Buna-N)	All
-ZP3-	Fugitive Emissions Packing (Kalrez)	All

Pressure/Temperature Ratings - Page M-21, Graph No. 28

DIMENSIONS

PART NO.	SIZE	A	B	C	D	E	F	G	H	J	K	L	M	N	P	WT.
86D-201-01	1/4"	0.37	2.80	0.89	5.12	3.02	2.02	1.01	1.39	1.97	0.23	0.245	0.375	1.00	10-24	2.3
86D-202-01	3/8"	0.50	2.80	0.89	5.12	3.02	2.02	1.01	1.39	1.97	0.23	0.245	0.375	1.00	10-24	2.3
86D-203-01	1/2"	0.50	2.80	0.89	5.12	3.02	2.02	1.01	1.39	1.97	0.23	0.245	0.375	1.00	10-24	2.3
86D-204-01	3/4"	0.75	3.68	1.10	5.53	3.40	2.40	1.20	1.65	2.35	0.24	0.312	0.500	1.392	1/4-20	4.0
86D-205-01	1"	1.00	4.19	1.31	6.53	4.80	2.67	1.34	1.80	2.80	0.48	0.287	0.500	1.392	1/4-20	5.7
86D-206-01	1-1/4"	1.50	4.50	1.97	6.65	4.70	3.84	1.92	2.49	3.89	0.72	0.412	0.625	1.949	5/16-18	14.2
86D-207-01	1-1/2"	1.50	4.98	1.97	6.65	4.70	3.84	1.92	2.49	3.89	0.72	0.412	0.625	1.949	5/16-18	14.4
86D-208-01	2"	2.00	5.86	2.56	8.40	5.47	4.56	2.46	3.17	4.74	0.80	0.477	0.750	1.949	5/16-18	27.6

REV. 17SEP19

aalberts integrated piping systems

86G-100 SERIES

STAINLESS STEEL 3-PIECE FULL PORT
CLASS 600 NPT BALL VALVE

5 YEAR WARRANTY MADE IN USA

STANDARD COMPLIANCE

- Valve Design: ASME B16.34, Class 600, NACE MR0175 (2000) & MR0103 (2012), API 608
- End Connections: NPT per ASME B1.20.1
- Valve Marking: ASME B16.34
- Production Testing: ASME B16.34

FEATURES

- 3-piece construction w/ enclosed fasteners
- Full port
- Stainless steel trim & hardware
- Swing-out center section
- Pressure balanced solid ball
- Compression controlled spiral wound gaskets
- Anti-blowout one piece bottom entry stem
- Statically grounded ball, stem, & body
- Two-position locking
- Adjustable multi-piece PTFE "V" style packing
- Fully machined ISO 5211 mounting
- Cast bosses on the center-section and end caps for bleed & drain ports
- Fire safe to API 607 (requires -24 suffix)
- Vacuum service to 29 in of Hg.
- CE Marking, 1-1/4" and larger (add "-CE" suffix)
- 250 psig saturated steam

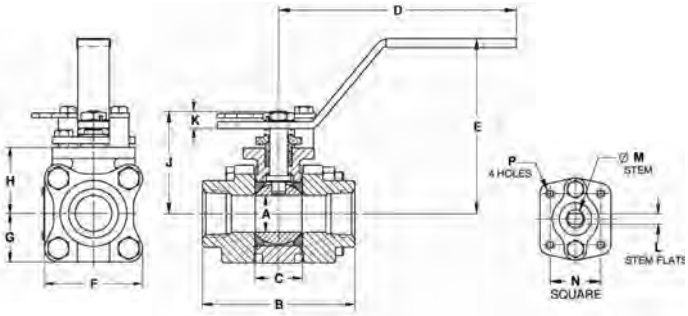

STANDARD MATERIAL LIST

	PART	MATERIAL
1	Body	ASTM A351-CF3M
2	End Caps	ASTM A351-CF3M
3	Ball	ASTM A276-316L SS
4	Stem	ASTM A276-316L SS
5	Seat	Multi-Seal
6	Packing	PTFE
7	Stem Bearing	PEEK/PTFE
8	Body Gasket	PTFE Spiral Wound
9	Body Bolts	ASTM A193-Gr.B8M3
10	Body Nuts	ASTM A194-Gr.8
11	Stop Bolts	18-8 Stainless Steel
12	Gland Bolts	ASTM A193-Gr.B8
13	Handle Nut/Screw	300 Series Stainless Steel
14	Packing Gland	ASTM A276-316SS
15	Gland Plate	300 Series Stainless Steel
16	Lever Handle	300 Series Stainless Steel
17	Lock Plate	300 Series Stainless Steel
18	Stops	300 Series Stainless Steel
19	Internal Grounding Spring	300 Series Stainless Steel
20	External Grounding Spring	300 Series Stainless Steel

Pressure/Temperature Ratings - Page M-31, Graph No. 46

OPTIONS AVAILABLE

(MORE INFORMATION IN SECTION J)

- Minimum quantities apply
- To specify an option, replace the "01" standard suffix with the suffix of the option.
- To specify multiple options, replace the "01" suffix with the desired suffixes in the numerical order shown below. NOTE: Not all suffixes can be combined together.

(SUFFIX)	OPTION	SIZES
-01	Standard Configuration	All
-P -01-	BSPP (Parallel) Thread Connection	All
-T -01-	BSPT (Tapered) Thread Connection	All
-04-	2-1/4" Stem Extension (Carbon Steel, Zinc Plated)	All
-14-	Vented Ball	All
-15-	Stainless Steel Locking Round Handle	All
-21-	UHMWPE Seats w/ Graphite Seals	All
-24-	Graphite Packing, Spiral Wound Graphite Body Seal, PTFE/PEEK Bearing (Fire Safe API 607, 6th Edition, ISO 10497:2010)	All
-38-	Peek Seats, Graphite Stem Packing & Gaskets	All
-49-	No Lubrication. Assembled Dry	All
-57-	Cleaned for Oxygen Service	All
-62-	Center Section Only	All
-63-	NPT x Socketweld	All
-69-	Drilled & Tapped Purge & Drains	All
-70-	4" Extended Bonnet	All
-76-	Live Loaded (Lever Operated)	All
-77-	Live Loaded (Actuated)	All
-90-	Double Packed 4" Extended Bonnet	All
-9P-	Double Packed 4" Extended Bonnet w/ Monitoring Port	All
-CE-	CE Marking	1-1/4" to 2"
-EF-	Graphite Packing (API 641 Compliant)	3/4" to 2"
-EP-	Garlock EVSP Stem Packing w/ Spiral Wound Graphite Gasket (Fire Safe by Design)	All
-KF-	PCTFE Stem Bearing	All
-SR-	Spring Return Handle	1/4" to 1"
-UL-	UL Listed	All
-ZP1-	Fugitive Emissions Packing (Viton)	All
-ZP2-	Fugitive Emissions Packing (Buna-N)	All
-ZP3-	Fugitive Emissions Packing (Kalrez)	All

DIMENSIONS

PART NO.	SIZE	A	B	C	D	E	F	G	H	J	K	L	M	N	P	WT.
86G-101-01	1/4"	0.37	2.80	0.89	5.12	3.02	2.02	1.01	1.39	1.97	0.23	0.245	0.375	1.00	10-24	2.3
86G-102-01	3/8	0.50	2.80	0.89	5.12	3.02	2.02	1.01	1.39	1.97	0.23	0.245	0.375	1.00	10-24	2.3
86G-103-01	1/2"	0.50	2.80	0.89	5.12	3.02	2.02	1.01	1.39	1.97	0.23	0.245	0.375	1.00	10-24	2.3
86G-104-01	3/4"	0.75	3.68	1.10	5.53	3.40	2.40	1.20	1.65	2.35	0.24	0.312	0.500	1.392	1/4-20	4.0
86G-105-01	1"	1.00	4.19	1.31	6.53	4.80	2.67	1.34	1.80	2.80	0.48	0.287	0.500	1.392	1/4-20	5.7
86G-106-01	1-1/4"	1.50	4.50	1.97	6.65	4.70	3.84	1.92	2.49	3.89	0.72	0.412	0.625	1.949	5/16-18	14.2
86G-107-01	1-1/2"	1.50	4.98	1.97	6.65	4.70	3.84	1.92	2.49	3.89	0.72	0.412	0.625	1.949	5/16-18	14.4
86G-108-01	2"	2.00	5.86	2.56	8.40	5.47	4.56	2.46	3.17	4.74	0.80	0.477	0.750	1.949	5/16-18	24.4

REV. 17SEP19

86G-200 SERIES

316L STAINLESS STEEL 3-PIECE FULL PORT
CLASS 600 SOCKET WELD BALL VALVE

5 YEAR WARRANTY MADE IN USA

STANDARD COMPLIANCE

- Valve Design: ASME B16.34, Class 600, NACE MR0175 (2000) & MR0103 (2012), API 608
- End Connections: Socket-weld per ASME B16.11
- Valve Marking: ASME B16.34
- Production Testing: ASME B16.34

FEATURES

- 3-piece construction w/ enclosed fasteners
- Full port
- Stainless steel trim & hardware
- Swing-out center section
- Pressure balanced solid ball
- Compression controlled spiral wound gaskets
- Anti-blowout one piece bottom entry stem
- Statically grounded ball, stem, & body
- Two-position locking
- Adjustable multi-piece PTFE "V" style packing
- Fully machined ISO 5211 mounting
- Cast bosses on the center-section and end caps for bleed & drain ports
- Fire safe to API 607 (requires -24 suffix)
- Vacuum service to 29 in of Hg.
- CE Marking, 1-1/4" and larger (add "-CE" suffix)
- 250 psig saturated steam

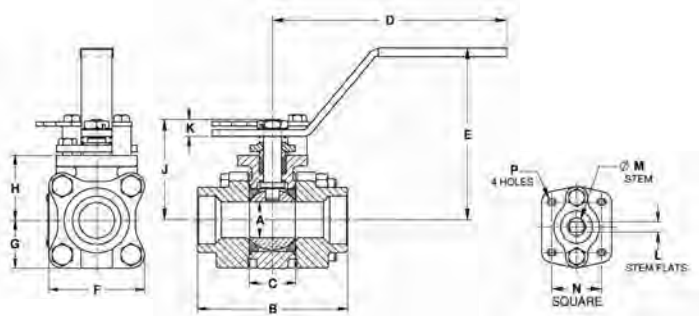

STANDARD MATERIAL LIST

	PART	MATERIAL
1	Body	ASTM A351-CF3M
2	End Caps	ASTM A351-CF3M
3	Ball	ASTM A276-316L SS
4	Stem	ASTM A276-316L SS
5	Seat	Multi-Seal
6	Packing	PTFE
7	Stem Bearing	PEEK/PTFE
8	Body Gasket	PTFE Spiral Wound
9	Body Bolts	ASTM A193-Gr.B8M3
10	Body Nuts	ASTM A194-Gr.8
11	Stop Bolts	18-8 Stainless Steel
12	Gland Bolts	ASTM A193-Gr.B8
13	Handle Nut/Screw	300 Series Stainless Steel
14	Packing Gland	ASTM A276-316SS
15	Gland Plate	300 Series Stainless Steel
16	Lever Handle	300 Series Stainless Steel
17	Lock Plate	300 Series Stainless Steel
18	Stops	300 Series Stainless Steel
19	Internal Grounding Spring	300 Series Stainless Steel
20	External Grounding Spring	300 Series Stainless Steel

OPTIONS AVAILABLE

(MORE INFORMATION IN SECTION J)

- Minimum quantities apply
- To specify an option, replace the "01" standard suffix with the suffix of the option.
- To specify multiple options, replace the "01" suffix with the desired suffixes in the numerical order shown below. NOTE: Not all suffixes can be combined together.

(SUFFIX)	OPTION	SIZES
-01	Standard Configuration	All
-04-	2-1/4" Stem Extension (Carbon Steel, Zinc Plated)	All
-14-	Vented Ball	All
-15-	Stainless Steel Locking Round Handle	All
-21-	UHMWPE Seats w/ Graphite Seals	All
-24-	Graphite Packing, Spiral Wound Graphite Body Seal, PTFE/PEEK Bearing (Fire Safe API 607, 6th Edition, ISO 10497:2010)	All
-38-	Peek Seats, Graphite Stem Packing & Gaskets	All
-49-	No Lubrication. Assembled Dry	All
-57-	Cleaned for Oxygen Service	All
-62-	Center Section Only	All
-69-	Drilled & Tapped Purge & Drains	All
-70-	4" Extended Bonnet	All
-76-	Live Loaded (Lever Operated)	All
-77-	Live Loaded (Actuated)	All
-90-	Double Packed 4" Extended Bonnet	All
-9P-	Double Packed 4" Extended Bonnet w/ Monitoring Port	All
-CE-	CE Marking	1-1/4" to 2"
-EF-	Graphite Packing (API 641 Compliant)	3/4" to 2"
-EP-	Garlock EVSP Stem Packing w/ Spiral Wound Graphite Gasket (Fire Safe by Design)	All
-KF-	PCTFE Stem Bearing	All
-SR-	Spring Return Handle	1/4" to 1"
-UL-	UL Listed	All
-ZP1-	Fugitive Emissions Packing (Viton)	All
-ZP2-	Fugitive Emissions Packing (Buna-N)	All
-ZP3-	Fugitive Emissions Packing (Kalrez)	All

Pressure/Temperature Ratings - Page M-31, Graph No. 46

DIMENSIONS

PART NO.	SIZE	A	B	C	D	E	F	G	H	J	K	L	M	N	P	WT.
86G-201-01	1/4"	0.37	2.80	0.89	5.12	3.02	2.02	1.01	1.39	1.97	0.23	0.245	0.375	1.00	10-24	2.3
86G-202-01	3/8"	0.50	2.80	0.89	5.12	3.02	2.02	1.01	1.39	1.97	0.23	0.245	0.375	1.00	10-24	2.3
86G-203-01	1/2"	0.50	2.80	0.89	5.12	3.02	2.02	1.01	1.39	1.97	0.23	0.245	0.375	1.00	10-24	2.3
86G-204-01	3/4"	0.75	3.68	1.10	5.53	3.40	2.40	1.20	1.65	2.35	0.24	0.312	0.500	1.392	1/4-20	4.0
86G-205-01	1"	1.00	4.19	1.31	6.53	4.80	2.67	1.34	1.80	2.80	0.48	0.287	0.500	1.392	1/4-20	5.7
86G-206-01	1-1/4"	1.50	4.50	1.97	6.65	4.70	3.84	1.92	2.49	3.89	0.72	0.412	0.625	1.949	5/16-18	14.2
86G-207-01	1-1/2"	1.50	4.98	1.97	6.65	4.70	3.84	1.92	2.49	3.89	0.72	0.412	0.625	1.949	5/16-18	14.4
86G-208-01	2"	2.00	5.86	2.56	8.40	5.47	4.56	2.46	3.17	4.74	0.80	0.477	0.750	1.949	5/16-18	24.4

REV. 17SEP19

aalberts integrated piping systems

86G-300 SERIES

316L STAINLESS STEEL 3-PIECE FULL PORT
CLASS 600 SCH. 5 BUTT WELD BALL VALVE

5 YEAR WARRANTY MADE IN USA

STANDARD COMPLIANCE

- Valve Design: ASME B16.34, Class 600, NACE MR0175 (2000) & MR0103 (2012), API 608
- End Connections: Butt-Weld per ASME B16.25
- Valve Marking: ASME B16.34
- Production Testing: ASME B16.34

FEATURES

- 3-piece construction w/ enclosed fasteners
- Full port
- Stainless steel trim & hardware
- Swing-out center section
- Pressure balanced solid ball
- Compression controlled spiral wound gaskets
- Anti-blowout one piece bottom entry stem
- Statically grounded ball, stem, & body
- Two-position locking
- Adjustable multi-piece PTFE "V" style packing
- Fully machined ISO 5211 mounting
- Cast bosses on the center-section and end caps for bleed & drain ports
- Fire safe to API 607 (requires -24 suffix)
- Vacuum service to 29 in of Hg.
- CE Marking, 1-1/2" and larger (add "-CE" suffix)
- 250 psig saturated steam

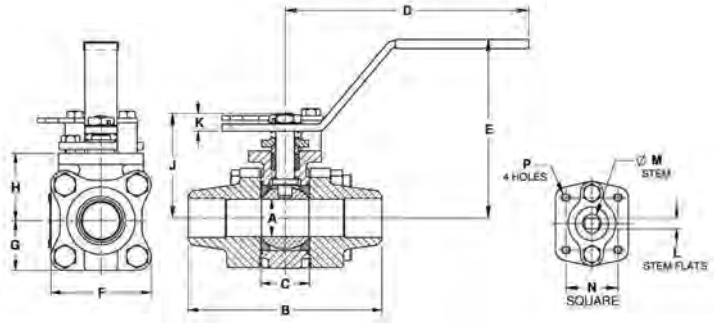

VARIATIONS AVAILABLE

- 86G-400 Schedule 10 Butt-Weld
- 86G-500 Schedule 40 Butt-Weld
- 86G-600 Schedule 80 Butt-Weld

OPTIONS AVAILABLE

(MORE INFORMATION IN SECTION J)

- Minimum quantities apply
- To specify an option, replace the "01" standard suffix with the suffix of the option.
- To specify multiple options, replace the "01" suffix with the desired suffixes in the numerical order shown below. NOTE: Not all suffixes can be combined together.

(SUFFIX)	OPTION	SIZES
-01	Standard Configuration	All
-04-	2-1/4" Stem Extension (Carbon Steel, Zinc Plated)	All
-14-	Vented Ball	All
-15-	Stainless Steel Locking Round Handle	All
-21-	UHMWPE Seats w/ Graphite Seals	All
-24-	Graphite Packing, Spiral Wound Graphite Body Seal, PTFE/PEEK Bearing (Fire Safe API 607, 6th Edition, ISO 10497:2010)	All
-38-	Peek Seats, Graphite Stem Packing & Gaskets	All
-49-	No Lubrication. Assembled Dry	All
-57-	Cleaned for Oxygen Service	All
-62-	Center Section Only	All
-66-	FNPT x Buttweld	All
-69-	Drilled & Tapped Purge & Drains	All
-70-	4" Extended Bonnet	All
-76-	Live Loaded (Lever Operated)	All
-77-	Live Loaded (Actuated)	All
-90-	Double Packed 4" Extended Bonnet	All
-9P-	Double Packed 4" Extended Bonnet w/ Monitoring Port	All
-CE-	CE Marking	1-1/2" to 2"
-EF-	Graphite Packing (API 641 Compliant)	3/4" to 2"
-EP-	Garlock EVSP Stem Packing w/ Spiral Wound Graphite Gasket (Fire Safe by Design)	All
-KF-	PCTFE Stem Bearing	All
-SR-	Spring Return Handle	1/2" to 1"
-UL-	UL Listed	All
-ZP1-	Fugitive Emissions Packing (Viton)	All
-ZP2-	Fugitive Emissions Packing (Buna-N)	All
-ZP3-	Fugitive Emissions Packing (Kalrez)	All

Pressure/Temperature Ratings - Page M-31, Graph No. 46

STANDARD MATERIAL LIST

	PART	MATERIAL
1	Body	ASTM A351-CF3M
2	End Caps	ASTM A351-CF3M
3	Ball	ASTM A276-316L SS
4	Stem	ASTM A276-316L SS
5	Seat	Multi-Seal
6	Packing	PTFE
7	Stem Bearing	PEEK/PTFE
8	Body Gasket	PTFE Spiral Wound
9	Body Bolts	ASTM A193-Gr.B8M3
10	Body Nuts	ASTM A194-Gr.8
11	Stop Bolts	18-8 Stainless Steel
12	Gland Bolts	ASTM A193-Gr.B8
13	Handle Nut/Screw	300 Series Stainless Steel
14	Packing Gland	ASTM A276-316SS
15	Gland Plate	300 Series Stainless Steel
16	Lever Handle	300 Series Stainless Steel
17	Lock Plate	300 Series Stainless Steel
18	Stops	300 Series Stainless Steel
19	Internal Grounding Spring	300 Series Stainless Steel
20	External Grounding Spring	300 Series Stainless Steel

DIMENSIONS

PART NO.	SIZE	A	B	C	D	E	F	G	H	J	K	L	M	N	P	WT.
86G-303-01	1/2"	0.50	3.80	0.89	5.12	3.02	2.02	1.01	1.39	1.97	0.23	0.245	0.375	1.00	10-24	2.3
86G-304-01	3/4"	0.75	4.66	1.10	5.53	3.40	2.40	1.20	1.65	2.35	0.24	0.312	0.500	1.392	1/4-20	4.0
86G-305-01	1"	1.00	5.19	1.31	6.53	4.80	2.67	1.34	1.80	2.80	0.48	0.287	0.500	1.392	1/4-20	5.7
86G-307-01	1-1/2"	1.50	5.96	1.97	6.65	4.70	3.84	1.92	2.49	3.89	0.72	0.412	0.625	1.949	5/16-18	14.4
86G-308-01	2"	2.00	6.84	2.56	8.40	5.47	4.56	2.46	3.17	4.74	0.80	0.477	0.750	1.949	5/16-18	24.4

REV. 17SEP19

86G-400 SERIES

316L STAINLESS STEEL 3-PIECE FULL PORT
CLASS 600 SCH. 10 BUTT WELD BALL VALVE

5 YEAR WARRANTY MADE IN USA

STANDARD COMPLIANCE

- Valve Design: ASME B16.34, Class 600, NACE MR0175 (2000) & MR0103 (2012), API 608
- End Connections: Butt-Weld per ASME B16.25
- Valve Marking: ASME B16.34
- Production Testing: ASME B16.34

FEATURES

- 3-piece construction w/ enclosed fasteners
- Full port
- Stainless steel trim & hardware
- Swing-out center section
- Pressure balanced solid ball
- Compression controlled spiral wound gaskets
- Anti-blowout one piece bottom entry stem
- Statically grounded ball, stem, & body
- Two-position locking
- Adjustable multi-piece PTFE "V" style packing
- Fully machined ISO 5211 mounting
- Cast bosses on the center-section and end caps for bleed & drain ports
- Fire safe to API 607 (requires -24 suffix)
- Vacuum service to 29 in of Hg.
- CE Marking, 1-1/2" and larger (add "-CE" suffix)
- 250 psig saturated steam

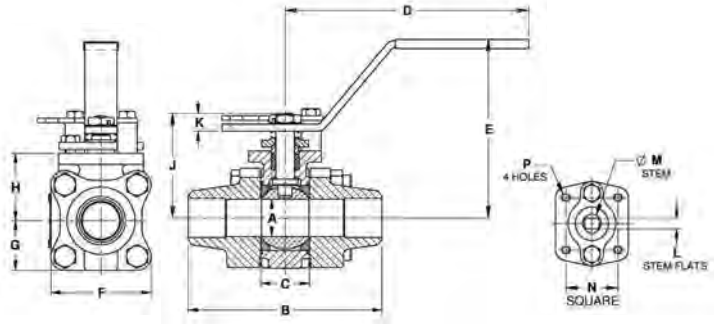

VARIATIONS AVAILABLE

- 86G-300 Schedule 5 Butt-Weld
- 86G-500 Schedule 40 Butt-Weld
- 86G-600 Schedule 80 Butt-Weld

OPTIONS AVAILABLE

(MORE INFORMATION IN SECTION J)

- Minimum quantities apply
- To specify an option, replace the "01" standard suffix with the suffix of the option.
- To specify multiple options, replace the "01" suffix with the desired suffixes in the numerical order shown below. NOTE: Not all suffixes can be combined together.

(SUFFIX)	OPTION	SIZES
-01	Standard Configuration	All
-04-	2-1/4" Stem Extension (Carbon Steel, Zinc Plated)	All
-14-	Vented Ball	All
-15-	Stainless Steel Locking Round Handle	All
-21-	UHMWPE Seats w/ Graphite Seals	All
-24-	Graphite Packing, Spiral Wound Graphite Body Seal, PTFE/PEEK Bearing (Fire Safe API 607, 6th Edition, ISO 10497:2010)	All
-38-	Peek Seats, Graphite Stem Packing & Gaskets	All
-49-	No Lubrication. Assembled Dry	All
-57-	Cleaned for Oxygen Service	All
-62-	Center Section Only	All
-66-	FNPT x Buttweld	All
-69-	Drilled & Tapped Purge & Drains	All
-70-	4" Extended Bonnet	All
-76-	Live Loaded (Lever Operated)	All
-77-	Live Loaded (Actuated)	All
-90-	Double Packed 4" Extended Bonnet	All
-9P-	Double Packed 4" Extended Bonnet w/ Monitoring Port	All
-CE-	CE Marking	1-1/2" to 2"
-EF-	Graphite Packing (API 641 Compliant)	3/4" to 2"
-EP-	Garlock EVSP Stem Packing w/ Spiral Wound Graphite Gasket (Fire Safe by Design)	All
-KF-	PCTFE Stem Bearing	All
-SR-	Spring Return Handle	1/2" to 1"
-UL-	UL Listed	All
-ZP1-	Fugitive Emissions Packing (Viton)	All
-ZP2-	Fugitive Emissions Packing (Buna-N)	All
-ZP3-	Fugitive Emissions Packing (Kalrez)	All

Pressure/Temperature Ratings - Page M-31, Graph No. 46

STANDARD MATERIAL LIST

	PART	MATERIAL
1	Body	ASTM A351-CF3M
2	End Caps	ASTM A351-CF3M
3	Ball	ASTM A276-316L SS
4	Stem	ASTM A276-316L SS
5	Seat	Multi-Seal
6	Packing	PTFE
7	Stem Bearing	PEEK/PTFE
8	Body Gasket	PTFE Spiral Wound
9	Body Bolts	ASTM A193-Gr.B8M3
10	Body Nuts	ASTM A194-Gr.8
11	Stop Bolts	18-8 Stainless Steel
12	Gland Bolts	ASTM A193-Gr.B8
13	Handle Nut/Screw	300 Series Stainless Steel
14	Packing Gland	ASTM A276-316SS
15	Gland Plate	300 Series Stainless Steel
16	Lever Handle	300 Series Stainless Steel
17	Lock Plate	300 Series Stainless Steel
18	Stops	300 Series Stainless Steel
19	Internal Grounding Spring	300 Series Stainless Steel
20	External Grounding Spring	300 Series Stainless Steel

DIMENSIONS

PART NO.	SIZE	A	B	C	D	E	F	G	H	J	K	L	M	N	P	WT.
86G-403-01	1/2"	0.50	3.80	0.89	5.12	3.02	2.02	1.01	1.39	1.97	0.23	0.245	0.375	1.00	10-24	2.3
86G-404-01	3/4"	0.75	4.66	1.10	5.53	3.40	2.40	1.20	1.65	2.35	0.24	0.312	0.500	1.392	1/4-20	4.0
86G-405-01	1"	1.00	5.19	1.31	6.53	4.80	2.67	1.34	1.80	2.80	0.48	0.287	0.500	1.392	1/4-20	5.7
86G-407-01	1-1/2"	1.50	5.96	1.97	6.65	4.70	3.84	1.92	2.49	3.89	0.72	0.412	0.625	1.949	5/16-18	14.4
86G-408-01	2"	2.00	6.84	2.56	8.40	5.47	4.56	2.46	3.17	4.74	0.80	0.477	0.750	1.949	5/16-18	24.4

REV. 17SEP19

aalberts integrated piping systems

86G-500 SERIES

316L STAINLESS STEEL 3-PIECE FULL PORT
CLASS 600 SCH.40 BUTT WELD BALL VALVE

5 YEAR WARRANTY MADE IN USA

STANDARD COMPLIANCE

- Valve Design: ASME B16.34, Class 600, NACE MR0175 (2000) & MR0103 (2012), API 608
- End Connections: Butt-Weld per ASME B16.25
- Valve Marking: ASME B16.34
- Production Testing: ASME B16.34

FEATURES

- 3-piece construction w/ enclosed fasteners
- Full port
- Stainless steel trim & hardware
- Swing-out center section
- Pressure balanced solid ball
- Compression controlled spiral wound gaskets
- Anti-blowout one piece bottom entry stem
- Statically grounded ball, stem, & body
- Two-position locking
- Adjustable multi-piece PTFE "V" style packing
- Fully machined ISO 5211 mounting
- Cast bosses on the center-section and end caps for bleed & drain ports
- Fire safe to API 607 (requires -24 suffix)
- Vacuum service to 29 in of Hg.
- CE Marking, 1-1/2" and larger (add "-CE" suffix)
- 250 psig saturated steam

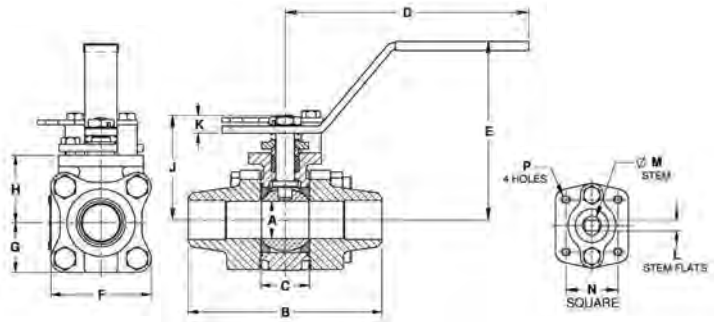

VARIATIONS AVAILABLE

- 86G-300 Schedule 5 Butt-Weld
- 86G-400 Schedule 10 Butt-Weld
- 86G-600 Schedule 80 Butt-Weld

OPTIONS AVAILABLE

(MORE INFORMATION IN SECTION J)

- Minimum quantities apply
- To specify an option, replace the "01" standard suffix with the suffix of the option.
- To specify multiple options, replace the "01" suffix with the desired suffixes in the numerical order shown below. NOTE: Not all suffixes can be combined together.

(SUFFIX)	OPTION	SIZES
-01	Standard Configuration	All
-04-	2-1/4" Stem Extension (Carbon Steel, Zinc Plated)	All
-14-	Vented Ball	All
-15-	Stainless Steel Locking Round Handle	All
-21-	UHMWPE Seats w/ Graphite Seals	All
-24-	Graphite Packing, Spiral Wound Graphite Body Seal, PTFE/PEEK Bearing (Fire Safe API 607, 6th Edition, ISO 10497:2010)	All
-38-	Peek Seats, Graphite Stem Packing & Gaskets	All
-49-	No Lubrication. Assembled Dry	All
-57-	Cleaned for Oxygen Service	All
-62-	Center Section Only	All
-66-	FNPT x Buttweld	All
-69-	Drilled & Tapped Purge & Drains	All
-70-	4" Extended Bonnet	All
-76-	Live Loaded (Lever Operated)	All
-77-	Live Loaded (Actuated)	All
-90-	Double Packed 4" Extended Bonnet	All
-9P-	Double Packed 4" Extended Bonnet w/ Monitoring Port	All
-CE-	CE Marking	1-1/2" to 2"
-EF-	Graphite Packing (API 641 Compliant)	3/4" to 2"
-EP-	Garlock EVSP Stem Packing w/ Spiral Wound Graphite Gasket (Fire Safe by Design)	All
-KF-	PCTFE Stem Bearing	All
-SR-	Spring Return Handle	1/2" to 1"
-UL-	UL Listed	All
-ZP1-	Fugitive Emissions Packing (Viton)	All
-ZP2-	Fugitive Emissions Packing (Buna-N)	All
-ZP3-	Fugitive Emissions Packing (Kalrez)	All

Pressure/Temperature Ratings - Page M-31, Graph No. 46

STANDARD MATERIAL LIST

	PART	MATERIAL
1	Body	ASTM A351-CF3M
2	End Caps	ASTM A351-CF3M
3	Ball	ASTM A276-316L SS
4	Stem	ASTM A276-316L SS
5	Seat	Multi-Seal
6	Packing	PTFE
7	Stem Bearing	PEEK/PTFE
8	Body Gasket	PTFE Spiral Wound
9	Body Bolts	ASTM A193-Gr.B8M3
10	Body Nuts	ASTM A194-Gr.8
11	Stop Bolts	18-8 Stainless Steel
12	Gland Bolts	ASTM A193-Gr.B8
13	Handle Nut/Screw	300 Series Stainless Steel
14	Packing Gland	ASTM A276-316SS
15	Gland Plate	300 Series Stainless Steel
16	Lever Handle	300 Series Stainless Steel
17	Lock Plate	300 Series Stainless Steel
18	Stops	300 Series Stainless Steel
19	Internal Grounding Spring	300 Series Stainless Steel
20	External Grounding Spring	300 Series Stainless Steel

DIMENSIONS

PART NO.	SIZE	A	B	C	D	E	F	G	H	J	K	L	M	N	P	WT.
86G-503-01	1/2"	0.50	3.80	0.89	5.12	3.02	2.02	1.01	1.39	1.97	0.23	0.245	0.375	1.00	10-24	2.3
86G-504-01	3/4"	0.75	4.66	1.10	5.53	3.40	2.40	1.20	1.65	2.35	0.24	0.312	0.500	1.392	1/4-20	4.0
86G-505-01	1"	1.00	5.19	1.31	6.53	4.80	2.67	1.34	1.80	2.80	0.48	0.287	0.500	1.392	1/4-20	5.7
86G-507-01	1-1/2"	1.50	5.96	1.97	6.65	4.70	3.84	1.92	2.49	3.89	0.72	0.412	0.625	1.949	5/16-18	14.4
86G-508-01	2"	2.00	6.84	2.56	8.40	5.47	4.56	2.46	3.17	4.74	0.80	0.477	0.750	1.949	5/16-18	24.4

REV. 17SEP19

86G-600 SERIES

316L STAINLESS STEEL 3-PIECE FULL PORT
CLASS 600 SCH. 80 BUTT WELD BALL VALVE

5 YEAR WARRANTY MADE IN USA

STANDARD COMPLIANCE

- Valve Design: ASME B16.34, Class 600, NACE MR0175 (2000) & MR0103 (2012), API 608
- End Connections: Butt-Weld per ASME B16.25
- Valve Marking: ASME B16.34
- Production Testing: ASME B16.34

FEATURES

- 3-piece construction w/ enclosed fasteners
- Full port
- Stainless steel trim & hardware
- Swing-out center section
- Pressure balanced solid ball
- Compression controlled spiral wound gaskets
- Anti-blowout one piece bottom entry stem
- Statically grounded ball, stem, & body
- Two-position locking
- Adjustable multi-piece PTFE "V" style packing
- Fully machined ISO 5211 mounting
- Cast bosses on the center-section and end caps for bleed & drain ports
- Fire safe to API 607 (requires -24 suffix)
- Vacuum service to 29 in of Hg.
- CE Marking, 1-1/2" and larger (add "-CE" suffix)
- 250 psig saturated steam

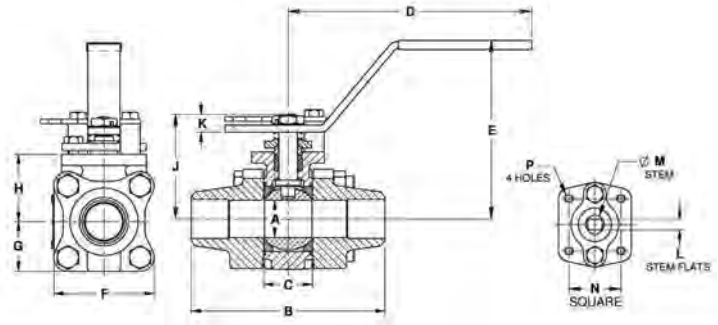

VARIATIONS AVAILABLE

- 86G-300 Schedule 5 Butt-Weld
- 86G-400 Schedule 10 Butt-Weld
- 86G-500 Schedule 40 Butt-Weld

OPTIONS AVAILABLE

(MORE INFORMATION IN SECTION J)

- Minimum quantities apply
- To specify an option, replace the "01" standard suffix with the suffix of the option.
- To specify multiple options, replace the "01" suffix with the desired suffixes in the numerical order shown below. NOTE: Not all suffixes can be combined together.

(SUFFIX)	OPTION	SIZES
-01	Standard Configuration	All
-04-	2-1/4" Stem Extension (Carbon Steel, Zinc Plated)	All
-14-	Vented Ball	All
-15-	Stainless Steel Locking Round Handle	All
-21-	UHMWPE Seats w/ Graphite Seals	All
-24-	Graphite Packing, Spiral Wound Graphite Body Seal, PTFE/PEEK Bearing (Fire Safe API 607, 6th Edition, ISO 10497:2010)	All
-38-	Peek Seats, Graphite Stem Packing & Gaskets	All
-49-	No Lubrication. Assembled Dry	All
-57-	Cleaned for Oxygen Service	All
-62-	Center Section Only	All
-66-	FNPT x Buttweld	All
-69-	Drilled & Tapped Purge & Drains	All
-70-	4" Extended Bonnet	All
-76-	Live Loaded (Lever Operated)	All
-77-	Live Loaded (Actuated)	All
-90-	Double Packed 4" Extended Bonnet	All
-9P-	Double Packed 4" Extended Bonnet w/ Monitoring Port	All
-CE-	CE Marking	1-1/2" to 2"
-EF-	Graphite Packing (API 641 Compliant)	3/4" to 2"
-EP-	Garlock EVSP Stem Packing w/ Spiral Wound Graphite Gasket (Fire Safe by Design)	All
-KF-	PCTFE Stem Bearing	All
-SR-	Spring Return Handle	1/2" to 1"
-UL-	UL Listed	All
-ZP1-	Fugitive Emissions Packing (Viton)	All
-ZP2-	Fugitive Emissions Packing (Buna-N)	All
-ZP3-	Fugitive Emissions Packing (Kalrez)	All

Pressure/Temperature Ratings - Page M-31, Graph No. 46

STANDARD MATERIAL LIST

	PART	MATERIAL
1	Body	ASTM A351-CF3M
2	End Caps	ASTM A351-CF3M
3	Ball	ASTM A276-316L SS
4	Stem	ASTM A276-316L SS
5	Seat	Multi-Seal
6	Packing	PTFE
7	Stem Bearing	PEEK/PTFE
8	Body Gasket	PTFE Spiral Wound
9	Body Bolts	ASTM A193-Gr.B8M3
10	Body Nuts	ASTM A194-Gr.8
11	Stop Bolts	18-8 Stainless Steel
12	Gland Bolts	ASTM A193-Gr.B8
13	Handle Nut/Screw	300 Series Stainless Steel
14	Packing Gland	ASTM A276-316SS
15	Gland Plate	300 Series Stainless Steel
16	Lever Handle	300 Series Stainless Steel
17	Lock Plate	300 Series Stainless Steel
18	Stops	300 Series Stainless Steel
19	Internal Grounding Spring	300 Series Stainless Steel
20	External Grounding Spring	300 Series Stainless Steel

DIMENSIONS

PART NO.	SIZE	A	B	C	D	E	F	G	H	J	K	L	M	N	P	WT.
86G-603-01	1/2"	0.50	3.80	0.89	5.12	3.02	2.02	1.01	1.39	1.97	0.23	0.245	0.375	1.00	10-24	2.3
86G-604-01	3/4"	0.75	4.66	1.10	5.53	3.40	2.40	1.20	1.65	2.35	0.24	0.312	0.500	1.392	1/4-20	4.0
86G-605-01	1"	1.00	5.19	1.31	6.53	4.80	2.67	1.34	1.80	2.80	0.48	0.287	0.500	1.392	1/4-20	5.7
86G-607-01	1-1/2"	1.50	5.96	1.97	6.65	4.70	3.84	1.92	2.49	3.89	0.72	0.412	0.625	1.949	5/16-18	14.4
86G-608-01	2"	2.00	6.84	2.56	8.40	5.47	4.56	2.46	3.17	4.74	0.80	0.477	0.750	1.949	5/16-18	24.4

REV. 17SEP19

aalberts integrated piping systems

86J-100 SERIES

DUPLEX STAINLESS STEEL 3-PIECE FULL PORT
CLASS 600 NPT BALL VALVE

5 YEAR WARRANTY MADE IN USA

STANDARD COMPLIANCE

- Valve Design: ASME B16.34, Class 600, API 608
- End Connections: NPT per ASME B1.20.1
- Valve Marking: ASME B16.34
- Production Testing: ASME B16.34

FEATURES

- 3-piece construction w/ enclosed fasteners
- Full port
- Stainless steel trim & hardware
- Swing-out center section
- Pressure balanced solid ball
- Compression controlled spiral wound gaskets
- Anti-blowout one piece bottom entry stem
- Statically grounded ball, stem, & body
- Two-position locking
- Adjustable multi-piece PTFE "V" style packing
- Fully machined ISO 5211 mounting
- Cast bosses on the center-section and end caps for bleed & drain ports
- Fire safe "by design" (requires -24 suffix)
- Vacuum service to 29 in of Hg.
- CE Marking, 1-1/4" and larger (add "-CE" suffix)
- 250 psig saturated steam

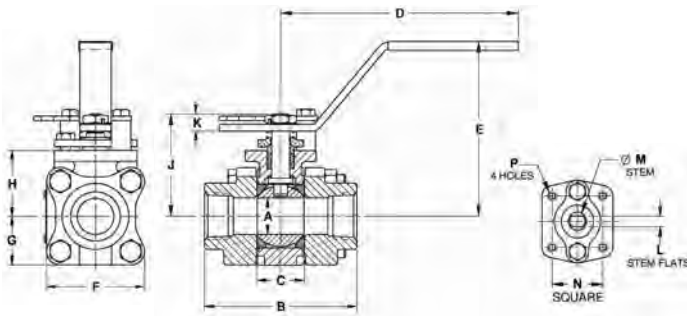

STANDARD MATERIAL LIST

	PART	MATERIAL
1	Body	ASTM A995 4A
2	End Caps	ASTM A995 4A
3	Ball	ASTM A276/A479 Alloy 2205
4	Stem	ASTM A276/A479 Alloy 2205
5	Seat	Multi-Seal
6	Packing	PTFE
7	Stem Bearing	PEEK/PTFE
8	Body Gasket	Inconel/Graphite
9	Body Bolts	ASTM A193-Gr.B8M3
10	Body Nuts	ASTM A194-Gr.8
11	Stop Bolts	18-8 Stainless Steel
12	Gland Bolts	ASTM A193-Gr.B8
13	Handle Nut/Screw	300 Series Stainless Steel
14	Packing Gland	ASTM A276-316SS
15	Gland Plate	300 Series Stainless Steel
16	Lever Handle	300 Series Stainless Steel
17	Lock Plate	300 Series Stainless Steel
18	Stops	300 Series Stainless Steel
19	Internal Grounding Spring	300 Series Stainless Steel
20	External Grounding Spring	300 Series Stainless Steel

OPTIONS AVAILABLE

(MORE INFORMATION IN SECTION J)

- Minimum quantities apply
- To specify an option, replace the "01" standard suffix with the suffix of the option.
- To specify multiple options, replace the "01" suffix with the desired suffixes in the numerical order shown below. NOTE: Not all suffixes can be combined together.

(SUFFIX)	OPTION	SIZES
-01	Standard Configuration	All
-P -01-	BSPP (Parallel) Thread Connection	All
-T -01-	BSPT (Tapered) Thread Connection	All
-04-	2-1/4" Stem Extension (Carbon Steel, Zinc Plated)	All
-14-	Vented Ball	All
-15-	Stainless Steel Locking Round Handle	All
-21-	UHMWPE Seats w/ Graphite Seals	All
-24-	Graphite Packing, Spiral Wound Graphite Body Seal, PTFE/ PEEK Bearing (Fire Safe by Design)	All
-38-	Peek Seats, Graphite Stem Packing & Gaskets	All
-49-	No Lubrication. Assembled Dry	All
-57-	Cleaned for Oxygen Service	All
-62-	Center Section Only	All
-63-	NPT x Socketweld	All
-69-	Drilled & Tapped Purge & Drains	All
-70-	4" Extended Bonnet	All
-76-	Live Loaded (Lever Operated)	All
-77-	Live Loaded (Actuated)	All
-90-	Double Packed 4" Extended Bonnet	All
-9P-	Double Packed 4" Extended Bonnet w/ Monitoring Port	All
-CE-	CE Marking	1-1/4" to 2"
-EF-	Graphite Packing (API 641 Compliant)	3/4" to 2"
-KF-	PCTFE Stem Bearing	All
-SR-	Spring Return Handle	1/4" to 1"
-ZP1-	Fugitive Emissions Packing (Viton)	All
-ZP2-	Fugitive Emissions Packing (Buna-N)	All
-ZP3-	Fugitive Emissions Packing (Kalrez)	All

Pressure/Temperature Ratings - Page M-29, Graph No. 42

DIMENSIONS

PART NO.	SIZE	A	B	C	D	E	F	G	H	J	K	L	M	N	P	WT.
86J-101-01	1/4"	0.37	2.80	0.89	5.12	3.02	2.02	1.01	1.39	1.97	0.23	0.245	0.375	1.00	10-24	2.3
86J-102-01	3/8	0.50	2.80	0.89	5.12	3.02	2.02	1.01	1.39	1.97	0.23	0.245	0.375	1.00	10-24	2.3
86J-103-01	1/2"	0.50	2.80	0.89	5.12	3.02	2.02	1.01	1.39	1.97	0.23	0.245	0.375	1.00	10-24	2.3
86J-104-01	3/4"	0.75	3.68	1.10	5.53	3.40	2.40	1.20	1.65	2.35	0.24	0.312	0.500	1.392	1/4-20	4.0
86J-105-01	1"	1.00	4.19	1.31	6.53	4.80	2.67	1.34	1.80	2.80	0.48	0.287	0.500	1.392	1/4-20	5.7
86J-106-01	1-1/4"	1.50	4.50	1.97	6.65	4.70	3.84	1.92	2.49	3.89	0.72	0.412	0.625	1.949	5/16-18	14.2
86J-107-01	1-1/2"	1.50	4.98	1.97	6.65	4.70	3.84	1.92	2.49	3.89	0.72	0.412	0.625	1.949	5/16-18	14.4
86J-108-01	2"	2.00	5.86	2.56	8.40	5.47	4.56	2.46	3.17	4.74	0.80	0.477	0.750	1.949	5/16-18	24.4

REV. 17SEP19

86J-200 SERIES

DUPLEX STAINLESS STEEL 3-PIECE FULL PORT
CLASS 600 SOCKET WELD BALL VALVE

5 YEAR WARRANTY MADE IN USA

STANDARD COMPLIANCE

- Valve Design: ASME B16.34, Class 600, API 608
- End Connections: Socket-weld per ASME B16.11
- Valve Marking: ASME B16.34
- Production Testing: ASME B16.34

FEATURES

- 3-piece construction w/ enclosed fasteners
- Full port
- Stainless steel trim & hardware
- Swing-out center section
- Pressure balanced solid ball
- Compression controlled spiral wound gaskets
- Anti-blowout one piece bottom entry stem
- Statically grounded ball, stem, & body
- Two-position locking
- Adjustable multi-piece PTFE "V" style packing
- Fully machined ISO 5211 mounting
- Cast bosses on the center-section and end caps for bleed & drain ports
- Fire safe "by design" (requires -24 suffix)
- Vacuum service to 29 in of Hg.
- CE Marking, 1-1/4" and larger (add "-CE" suffix)
- 250 psig saturated steam (with "-24" option)

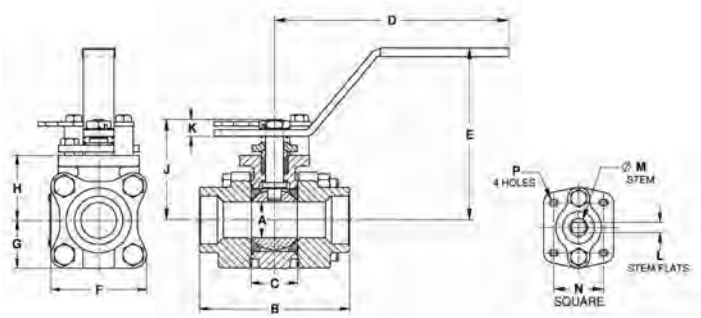

OPTIONS AVAILABLE

(MORE INFORMATION IN SECTION J)

- Minimum quantities apply
- To specify an option, replace the "01" standard suffix with the suffix of the option.
- To specify multiple options, replace the "01" suffix with the desired suffixes in the numerical order shown below. NOTE: Not all suffixes can be combined together.

(SUFFIX)	OPTION	SIZES
-01	Standard Configuration	All
-04-	2-1/4" Stem Extension (Carbon Steel, Zinc Plated)	All
-14-	Vented Ball	All
-15-	Stainless Steel Locking Round Handle	All
-21-	UHMWPE Seats w/ Graphite Seals	All
-24-	Graphite Packing, Spiral Wound Graphite Body Seal, PTFE/PEEK Bearing (Fire Safe by Design)	All
-38-	Peek Seats, Graphite Stem Packing & Gaskets	All
-49-	No Lubrication. Assembled Dry	All
-57-	Cleaned for Oxygen Service	All
-62-	Center Section Only	All
-69-	Drilled & Tapped Purge & Drains	All
-70-	4" Extended Bonnet	All
-76-	Live Loaded (Lever Operated)	All
-77-	Live Loaded (Actuated)	All
-90-	Double Packed 4" Extended Bonnet	All
-9P-	Double Packed 4" Extended Bonnet w/ Monitoring Port	All
-CE-	CE Marking	1-1/4" to 2"
-EF-	Graphite Packing (API 641 Compliant)	3/4" to 2"
-KF-	PCTFE Stem Bearing	All
-SR-	Spring Return Handle	1/4" to 1"
-ZP1-	Fugitive Emissions Packing (Viton)	All
-ZP2-	Fugitive Emissions Packing (Buna-N)	All
-ZP3-	Fugitive Emissions Packing (Kalrez)	All

Pressure/Temperature Ratings - Page M-29, Graph No. 42

STANDARD MATERIAL LIST

	PART	MATERIAL
1	Body	ASTM A995 4A
2	End Caps	ASTM A995 4A
3	Ball	ASTM A276/A479 Alloy 2205
4	Stem	ASTM A276/A479 Alloy 2205
5	Seat	Multi-Seal
6	Packing	PTFE
7	Stem Bearing	PEEK/PTFE
8	Body Gasket	Inconel/Graphite
9	Body Bolts	ASTM A193-Gr.B8M3
10	Body Nuts	ASTM A194-Gr.8
11	Stop Bolts	18-8 Stainless Steel
12	Gland Bolts	ASTM A193-Gr.B8
13	Handle Nut/Screw	300 Series Stainless Steel
14	Packing Gland	ASTM A276-316SS
15	Gland Plate	300 Series Stainless Steel
16	Lever Handle	300 Series Stainless Steel
17	Lock Plate	300 Series Stainless Steel
18	Stops	300 Series Stainless Steel
19	Internal Grounding Spring	300 Series Stainless Steel
20	External Grounding Spring	300 Series Stainless Steel

DIMENSIONS

PART NO.	SIZE	A	B	C	D	E	F	G	H	J	K	L	M	N	P	WT.
86J-201-01	1/4"	0.37	2.80	0.89	5.12	3.02	2.02	1.01	1.39	1.97	0.23	0.245	0.375	1.00	10-24	2.3
86J-202-01	3/8"	0.50	2.80	0.89	5.12	3.02	2.02	1.01	1.39	1.97	0.23	0.245	0.375	1.00	10-24	2.3
86J-203-01	1/2"	0.50	2.80	0.89	5.12	3.02	2.02	1.01	1.39	1.97	0.23	0.245	0.375	1.00	10-24	2.3
86J-204-01	3/4"	0.75	3.68	1.10	5.53	3.40	2.40	1.20	1.65	2.35	0.24	0.312	0.500	1.392	1/4-20	4.0
86J-205-01	1"	1.00	4.19	1.31	6.53	4.80	2.67	1.34	1.80	2.80	0.48	0.287	0.500	1.392	1/4-20	5.7
86J-206-01	1-1/4"	1.50	4.50	1.97	6.65	4.70	3.84	1.92	2.49	3.89	0.72	0.412	0.625	1.949	5/16-18	14.2
86J-207-01	1-1/2"	1.50	4.98	1.97	6.65	4.70	3.84	1.92	2.49	3.89	0.72	0.412	0.625	1.949	5/16-18	14.4
86J-208-01	2"	2.00	5.86	2.56	8.40	5.47	4.56	2.46	3.17	4.74	0.80	0.477	0.750	1.949	5/16-18	24.4

REV. 17SEP19

aalberts integrated piping systems

86J-300 SERIES

DUPLEX STAINLESS STEEL 3-PIECE FULL PORT
CLASS 600 SCH. 5 BUTT WELD BALL VALVE

5 YEAR WARRANTY MADE IN USA

STANDARD COMPLIANCE

- Valve Design: ASME B16.34, Class 600, API 608
- End Connections: Butt-Weld per ASME B16.25
- Valve Marking: ASME B16.34
- Production Testing: ASME B16.34

FEATURES

- 3-piece construction w/ enclosed fasteners
- Full port
- Stainless steel trim & hardware
- Swing-out center section
- Pressure balanced solid ball
- Compression controlled spiral wound gaskets
- Anti-blowout one piece bottom entry stem
- Statically grounded ball, stem, & body
- Two-position locking
- Adjustable multi-piece PTFE "V" style packing
- Fully machined ISO 5211 mounting
- Cast bosses on the center-section and end caps for bleed & drain ports
- Fire safe "by design" (requires -24 suffix)
- Vacuum service to 29 in of Hg.
- CE Marking, 1-1/2" and larger (add "-CE" suffix)
- 250 psig saturated steam

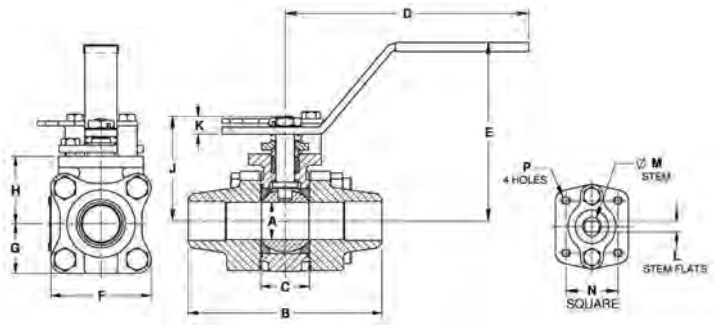

VARIATIONS AVAILABLE

- 86B-400 Schedule 10 Butt-Weld
- 86B-500 Schedule 40 Butt-Weld
- 86B-600 Schedule 80 Butt-Weld

OPTIONS AVAILABLE

(MORE INFORMATION IN SECTION J)

- Minimum quantities apply
- To specify an option, replace the "01" standard suffix with the suffix of the option.
- To specify multiple options, replace the "01" suffix with the desired suffixes in the numerical order shown below. NOTE: Not all suffixes can be combined together.

(SUFFIX)	OPTION	SIZES
-01	Standard Configuration	All
-04-	2-1/4" Stem Extension (Carbon Steel, Zinc Plated)	All
-14-	Vented Ball	All
-15-	Stainless Steel Locking Round Handle	All
-21-	UHMWPE Seats w/ Graphite Seals	All
-24-	Graphite Packing, Spiral Wound Graphite Body Seal, PTFE/PEEK Bearing (Fire Safe by Design)	All
-38-	Peek Seats, Graphite Stem Packing & Gaskets	All
-49-	No Lubrication. Assembled Dry	All
-57-	Cleaned for Oxygen Service	All
-62-	Center Section Only	All
-66-	FNPT x Buttweld	All
-69-	Drilled & Tapped Purge & Drains	All
-70-	4" Extended Bonnet	All
-76-	Live Loaded (Lever Operated)	All
-77-	Live Loaded (Actuated)	All
-90-	Double Packed 4" Extended Bonnet	All
-9P-	Double Packed 4" Extended Bonnet w/ Monitoring Port	All
-CE-	CE Marking	1-1/4" to 2"
-EF-	Graphite Packing (API 641 Compliant)	3/4" to 2"
-KF-	PCTFE Stem Bearing	All
-SR-	Spring Return Handle	1/2" to 1"
-ZP1-	Fugitive Emissions Packing (Viton)	All
-ZP2-	Fugitive Emissions Packing (Buna-N)	All
-ZP3-	Fugitive Emissions Packing (Kalrez)	All

Pressure/Temperature Ratings - Page M-29, Graph No. 42

STANDARD MATERIAL LIST

	PART	MATERIAL
1	Body	ASTM A995 4A
2	End Caps	ASTM A995 4A
3	Ball	ASTM A276/A479 Alloy 2205
4	Stem	ASTM A276/A479 Alloy 2205
5	Seat	Multi-Seal
6	Packing	PTFE
7	Stem Bearing	PEEK/PTFE
8	Body Gasket	PTFE Spiral Wound
9	Body Bolts	ASTM A193-Gr.B8M3
10	Body Nuts	ASTM A194-Gr.8
11	Stop Bolts	18-8 Stainless Steel
12	Gland Bolts	ASTM A193-Gr.B8
13	Handle Nut/Screw	300 Series Stainless Steel
14	Packing Gland	ASTM A276-316SS
15	Gland Plate	300 Series Stainless Steel
16	Lever Handle	300 Series Stainless Steel
17	Lock Plate	300 Series Stainless Steel
18	Stops	300 Series Stainless Steel
19	Internal Grounding Spring	300 Series Stainless Steel
20	External Grounding Spring	300 Series Stainless Steel

DIMENSIONS

PART NO.	SIZE	A	B	C	D	E	F	G	H	J	K	L	M	N	P	WT.
86J-303-01	1/2"	0.50	3.80	0.89	5.12	3.02	2.02	1.01	1.39	1.97	0.23	0.245	0.375	1.00	10-24	2.3
86J-304-01	3/4"	0.75	4.66	1.10	5.53	3.40	2.40	1.20	1.65	2.35	0.24	0.312	0.500	1.392	1/4-20	4.0
86J-305-01	1"	1.00	5.19	1.31	6.53	4.80	2.67	1.34	1.80	2.80	0.48	0.287	0.500	1.392	1/4-20	5.7
86J-307-01	1-1/2"	1.50	5.96	1.97	6.65	4.70	3.84	1.92	2.49	3.89	0.72	0.412	0.625	1.949	5/16-18	14.4
86J-308-01	2"	2.00	6.84	2.56	8.40	5.47	4.56	2.46	3.17	4.74	0.80	0.477	0.750	1.949	5/16-18	24.4

REV. 17SEP19

86J-400 SERIES

DUPLEX STAINLESS STEEL 3-PIECE FULL PORT
CLASS 600 SCH. 10 BUTT WELD BALL VALVE

5 YEAR WARRANTY MADE IN USA

STANDARD COMPLIANCE

- Valve Design: ASME B16.34, Class 600, API 608
- End Connections: Butt-Weld per ASME B16.25
- Valve Marking: ASME B16.34
- Production Testing: ASME B16.34

FEATURES

- 3-piece construction w/ enclosed fasteners
- Full port
- Stainless steel trim & hardware
- Swing-out center section
- Pressure balanced solid ball
- Compression controlled spiral wound gaskets
- Anti-blowout one piece bottom entry stem
- Statically grounded ball, stem, & body
- Two-position locking
- Adjustable multi-piece PTFE "V" style packing
- Fully machined ISO 5211 mounting
- Cast bosses on the center-section and end caps for bleed & drain ports
- Fire safe "by design" (requires -24 suffix)
- Vacuum service to 29 in of Hg.
- CE Marking, 1-1/2" and larger (add "-CE" suffix)
- 250 psig saturated steam

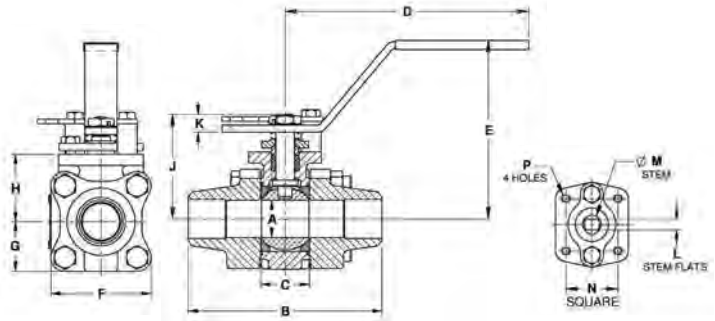

VARIATIONS AVAILABLE

- 86B-300 Schedule 5 Butt-Weld
- 86B-500 Schedule 40 Butt-Weld
- 86B-600 Schedule 80 Butt-Weld

OPTIONS AVAILABLE

(MORE INFORMATION IN SECTION J)

- Minimum quantities apply
- To specify an option, replace the "01" standard suffix with the suffix of the option.
- To specify multiple options, replace the "01" suffix with the desired suffixes in the numerical order shown below. NOTE: Not all suffixes can be combined together.

(SUFFIX)	OPTION	SIZES
-01	Standard Configuration	All
-04-	2-1/4" Stem Extension (Carbon Steel, Zinc Plated)	All
-14-	Vented Ball	All
-15-	Stainless Steel Locking Round Handle	All
-21-	UHMWPE Seats w/ Graphite Seals	All
-24-	Graphite Packing, Spiral Wound Graphite Body Seal, PTFE/ PEEK Bearing (Fire Safe by Design)	All
-38-	Peek Seats, Graphite Stem Packing & Gaskets	All
-49-	No Lubrication. Assembled Dry	All
-57-	Cleaned for Oxygen Service	All
-62-	Center Section Only	All
-66-	FNPT x Buttweld	All
-69-	Drilled & Tapped Purge & Drains	All
-70-	4" Extended Bonnet	All
-76-	Live Loaded (Lever Operated)	All
-77-	Live Loaded (Actuated)	All
-90-	Double Packed 4" Extended Bonnet	All
-9P-	Double Packed 4" Extended Bonnet w/ Monitoring Port	All
-CE-	CE Marking	1-1/4" to 2"
-EF-	Graphite Packing (API 641 Compliant)	3/4" to 2"
-KF-	PCTFE Stem Bearing	All
-SR-	Spring Return Handle	1/2" to 1"
-ZP1-	Fugitive Emissions Packing (Viton)	All
-ZP2-	Fugitive Emissions Packing (Buna-N)	All
-ZP3-	Fugitive Emissions Packing (Kalrez)	All

Pressure/Temperature Ratings - Page M-29, Graph No. 42

STANDARD MATERIAL LIST

	PART	MATERIAL
1	Body	ASTM A995 4A
2	End Caps	ASTM A995 4A
3	Ball	ASTM A276/A479 Alloy 2205
4	Stem	ASTM A276/A479 Alloy 2205
5	Seat	Multi-Seal
6	Packing	PTFE
7	Stem Bearing	PEEK/PTFE
8	Body Gasket	Inconel/Graphite
9	Body Bolts	ASTM A193-Gr.B8M3
10	Body Nuts	ASTM A194-Gr.8
11	Stop Bolts	18-8 Stainless Steel
12	Gland Bolts	ASTM A193-Gr.B8
13	Handle Nut/Screw	300 Series Stainless Steel
14	Packing Gland	ASTM A276-316SS
15	Gland Plate	300 Series Stainless Steel
16	Lever Handle	300 Series Stainless Steel
17	Lock Plate	300 Series Stainless Steel
18	Stops	300 Series Stainless Steel
19	Internal Grounding Spring	300 Series Stainless Steel
20	External Grounding Spring	300 Series Stainless Steel

DIMENSIONS

PART NO.	SIZE	A	B	C	D	E	F	G	H	J	K	L	M	N	P	WT.
86J-403-01	1/2"	0.50	3.80	0.89	5.12	3.02	2.02	1.01	1.39	1.97	0.23	0.245	0.375	1.00	10-24	2.3
86J-404-01	3/4"	0.75	4.66	1.10	5.53	3.40	2.40	1.20	1.65	2.35	0.24	0.312	0.500	1.392	1/4-20	4.0
86J-405-01	1"	1.00	5.19	1.31	6.53	4.80	2.67	1.34	1.80	2.80	0.48	0.287	0.500	1.392	1/4-20	5.7
86J-407-01	1-1/2"	1.50	5.96	1.97	6.65	4.70	3.84	1.92	2.49	3.89	0.72	0.412	0.625	1.949	5/16-18	14.4
86J-408-01	2"	2.00	6.84	2.56	8.40	5.47	4.56	2.46	3.17	4.74	0.80	0.477	0.750	1.949	5/16-18	24.4

REV. 17SEP19

aalberts integrated piping systems

86J-500 SERIES

DUPLEX STAINLESS STEEL 3-PIECE FULL PORT
CLASS 600 SCH. 40 BUTT WELD BALL VALVE

5 YEAR WARRANTY MADE IN USA

STANDARD COMPLIANCE

- Valve Design: ASME B16.34, Class 600, API 608
- End Connections: Butt-Weld per ASME B16.25
- Valve Marking: ASME B16.34
- Production Testing: ASME B16.34

FEATURES

- 3-piece construction w/ enclosed fasteners
- Full port
- Stainless steel trim & hardware
- Swing-out center section
- Pressure balanced solid ball
- Compression controlled spiral wound gaskets
- Anti-blowout one piece bottom entry stem
- Statically grounded ball, stem, & body
- Two-position locking
- Adjustable multi-piece PTFE "V" style packing
- Fully machined ISO 5211 mounting
- Cast bosses on the center-section and end caps for bleed & drain ports
- Fire safe "by design" (requires -24 suffix)
- Vacuum service to 29 in of Hg.
- CE Marking, 1-1/2" and larger (add "-CE" suffix)
- 250 psig saturated steam

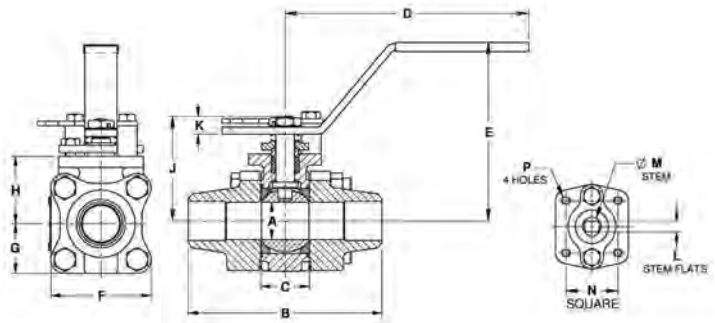

VARIATIONS AVAILABLE

- 86B-300 Schedule 5 Butt-Weld
- 86B-400 Schedule 10 Butt-Weld
- 86B-600 Schedule 80 Butt-Weld

OPTIONS AVAILABLE

(MORE INFORMATION IN SECTION J)

- Minimum quantities apply
- To specify an option, replace the "01" standard suffix with the suffix of the option.
- To specify multiple options, replace the "01" suffix with the desired suffixes in the numerical order shown below. NOTE: Not all suffixes can be combined together.

(SUFFIX)	OPTION	SIZES
-01	Standard Configuration	All
-04-	2-1/4" Stem Extension (Carbon Steel, Zinc Plated)	All
-14-	Vented Ball	All
-15-	Stainless Steel Locking Round Handle	All
-21-	UHMWPE Seats w/ Graphite Seals	All
-24-	Graphite Packing, Spiral Wound Graphite Body Seal, PTFE/PEEK Bearing (Fire Safe by Design)	All
-38-	Peek Seats, Graphite Stem Packing & Gaskets	All
-49-	No Lubrication. Assembled Dry	All
-57-	Cleaned for Oxygen Service	All
-62-	Center Section Only	All
-66-	FNPT x Buttweld	All
-69-	Drilled & Tapped Purge & Drains	All
-70-	4" Extended Bonnet	All
-76-	Live Loaded (Lever Operated)	All
-77-	Live Loaded (Actuated)	All
-90-	Double Packed 4" Extended Bonnet	All
-9P-	Double Packed 4" Extended Bonnet w/ Monitoring Port	All
-CE-	CE Marking	1-1/2" to 2"
-EF-	Graphite Packing (API 641 Compliant)	3/4" to 2"
-KF-	PCTFE Stem Bearing	All
-SR-	Spring Return Handle	1/2" to 1"
-ZP1-	Fugitive Emissions Packing (Viton)	All
-ZP2-	Fugitive Emissions Packing (Buna-N)	All
-ZP3-	Fugitive Emissions Packing (Kalrez)	All

Pressure/Temperature Ratings - Page M-29, Graph No. 42

STANDARD MATERIAL LIST

	PART	MATERIAL
1	Body	ASTM A995 4A
2	End Caps	ASTM A995 4A
3	Ball	ASTM A276/A479 Alloy 2205
4	Stem	ASTM A276/A479 Alloy 2205
5	Seat	Multi-Seal
6	Packing	PTFE
7	Stem Bearing	PEEK/PTFE
8	Body Gasket	PTFE Spiral Wound
9	Body Bolts	ASTM A193-Gr.B8M3
10	Body Nuts	ASTM A194-Gr.8
11	Stop Bolts	18-8 Stainless Steel
12	Gland Bolts	ASTM A193-Gr.B8
13	Handle Nut/Screw	300 Series Stainless Steel
14	Packing Gland	ASTM A276-316SS
15	Gland Plate	300 Series Stainless Steel
16	Lever Handle	300 Series Stainless Steel
17	Lock Plate	300 Series Stainless Steel
18	Stops	300 Series Stainless Steel
19	Internal Grounding Spring	300 Series Stainless Steel
20	External Grounding Spring	300 Series Stainless Steel

DIMENSIONS

PART NO.	SIZE	A	B	C	D	E	F	G	H	J	K	L	M	N	P	WT.
86J-503-01	1/2"	0.50	3.80	0.89	5.12	3.02	2.02	1.01	1.39	1.97	0.23	0.245	0.375	1.00	10-24	2.3
86J-504-01	3/4"	0.75	4.66	1.10	5.53	3.40	2.40	1.20	1.65	2.35	0.24	0.312	0.500	1.392	1/4-20	4.0
86J-505-01	1"	1.00	5.19	1.31	6.53	4.80	2.67	1.34	1.80	2.80	0.48	0.287	0.500	1.392	1/4-20	5.7
86J-507-01	1-1/2"	1.50	5.96	1.97	6.65	4.70	3.84	1.92	2.49	3.89	0.72	0.412	0.625	1.949	5/16-18	14.4
86J-508-01	2"	2.00	6.84	2.56	8.40	5.47	4.56	2.46	3.17	4.74	0.80	0.477	0.750	1.949	5/16-18	24.4

REV. 17SEP19

86J-600 SERIES

DUPLEX STAINLESS STEEL 3-PIECE FULL PORT
CLASS 600 SCH. 80 BUTT WELD BALL VALVE

5 YEAR WARRANTY MADE IN USA

STANDARD COMPLIANCE

- Valve Design: ASME B16.34, Class 600, API 608
- End Connections: Butt-Weld per ASME B16.25
- Valve Marking: ASME B16.34
- Production Testing: ASME B16.34

FEATURES

- 3-piece construction w/ enclosed fasteners
- Full port
- Stainless steel trim & hardware
- Swing-out center section
- Pressure balanced solid ball
- Compression controlled spiral wound gaskets
- Anti-blowout one piece bottom entry stem
- Statically grounded ball, stem, & body
- Two-position locking
- Adjustable multi-piece PTFE "V" style packing
- Fully machined ISO 5211 mounting
- Cast bosses on the center-section and end caps for bleed & drain ports
- Fire safe "by design" (requires -24 suffix)
- Vacuum service to 29 in of Hg.
- CE Marking, 1-1/2" and larger (add "-CE" suffix)
- 250 psig saturated steam

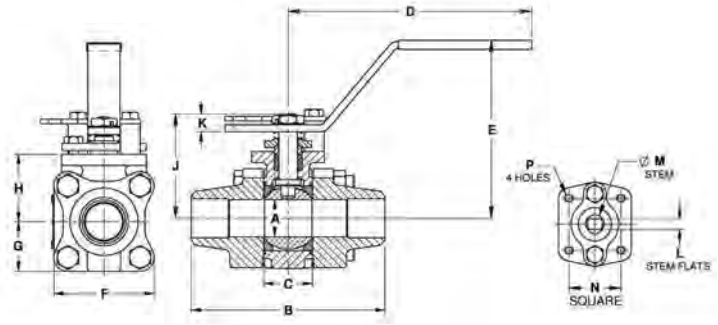

VARIATIONS AVAILABLE

- 86B-300 Schedule 5 Butt-Weld
- 86B-400 Schedule 10 Butt-Weld
- 86B-500 Schedule 40 Butt-Weld

OPTIONS AVAILABLE

(MORE INFORMATION IN SECTION J)

- Minimum quantities apply
- To specify an option, replace the "01" standard suffix with the suffix of the option.
- To specify multiple options, replace the "01" suffix with the desired suffixes in the numerical order shown below. NOTE: Not all suffixes can be combined together.

(SUFFIX)	OPTION	SIZES
-01	Standard Configuration	All
-04-	2-1/4" Stem Extension (Carbon Steel, Zinc Plated)	All
-14-	Vented Ball	All
-15-	Stainless Steel Locking Round Handle	All
-21-	UHMWPE Seats w/ Graphite Seals	All
-24-	Graphite Packing, Spiral Wound Graphite Body Seal, PTFE/PEEK Bearing (Fire Safe by Design)	All
-38-	Peek Seats, Graphite Stem Packing & Gaskets	All
-49-	No Lubrication. Assembled Dry	All
-57-	Cleaned for Oxygen Service	All
-62-	Center Section Only	All
-66-	FNPT x Buttweld	All
-69-	Drilled & Tapped Purge & Drains	All
-70-	4" Extended Bonnet	All
-76-	Live Loaded (Lever Operated)	All
-77-	Live Loaded (Actuated)	All
-90-	Double Packed 4" Extended Bonnet	All
-9P-	Double Packed 4" Extended Bonnet w/ Monitoring Port	All
-CE-	CE Marking	1-1/2" to 2"
-EF-	Graphite Packing (API 641 Compliant)	3/4" to 2"
-KF-	PCTFE Stem Bearing	All
-SR-	Spring Return Handle	1/2" to 1"
-ZP1-	Fugitive Emissions Packing (Viton)	All
-ZP2-	Fugitive Emissions Packing (Buna-N)	All
-ZP3-	Fugitive Emissions Packing (Kalrez)	All

Pressure/Temperature Ratings - Page M-29, Graph No. 42

STANDARD MATERIAL LIST

	PART	MATERIAL
1	Body	ASTM A995 4A
2	End Caps	ASTM A995 4A
3	Ball	ASTM A276/A479 Alloy 2205
4	Stem	ASTM A276/A479 Alloy 2205
5	Seat	Multi-Seal
6	Packing	PTFE
7	Stem Bearing	PEEK/PTFE
8	Body Gasket	PTFE Spiral Wound
9	Body Bolts	ASTM A193-Gr.B8M3
10	Body Nuts	ASTM A194-Gr.8
11	Stop Bolts	18-8 Stainless Steel
12	Gland Bolts	ASTM A193-Gr.B8
13	Handle Nut/Screw	300 Series Stainless Steel
14	Packing Gland	ASTM A276-316SS
15	Gland Plate	300 Series Stainless Steel
16	Lever Handle	300 Series Stainless Steel
17	Lock Plate	300 Series Stainless Steel
18	Stops	300 Series Stainless Steel
19	Internal Grounding Spring	300 Series Stainless Steel
20	External Grounding Spring	300 Series Stainless Steel

DIMENSIONS

PART NO.	SIZE	A	B	C	D	E	F	G	H	J	K	L	M	N	P	WT.
86J-603-01	1/2"	0.50	3.80	0.89	5.12	3.02	2.02	1.01	1.39	1.97	0.23	0.245	0.375	1.00	10-24	2.3
86J-604-01	3/4"	0.75	4.66	1.10	5.53	3.40	2.40	1.20	1.65	2.35	0.24	0.312	0.500	1.392	1/4-20	4.0
86J-605-01	1"	1.00	5.19	1.31	6.53	4.80	2.67	1.34	1.80	2.80	0.48	0.287	0.500	1.392	1/4-20	5.7
86J-607-01	1-1/2"	1.50	5.96	1.97	6.65	4.70	3.84	1.92	2.49	3.89	0.72	0.412	0.625	1.949	5/16-18	14.4
86J-608-01	2"	2.00	6.84	2.56	8.40	5.47	4.56	2.46	3.17	4.74	0.80	0.477	0.750	1.949	5/16-18	24.4

REV. 17SEP19

aalberts integrated piping systems

86K-100 SERIES

SUPER DUPLEX STAINLESS STEEL 3-PIECE FULL PORT
CLASS 600 NPT BALL VALVE

5 YEAR WARRANTY MADE IN USA

STANDARD COMPLIANCE

- Valve Design: ASME B16.34, Class 600, API 608
- End Connections: NPT per ASME B1.20.1
- Valve Marking: ASME B16.34
- Production Testing: ASME B16.34

FEATURES

- 3-piece construction w/ enclosed fasteners
- Full port
- Stainless steel trim & hardware
- Swing-out center section
- Pressure balanced solid ball
- Compression controlled spiral wound gaskets
- Anti-blowout one piece bottom entry stem
- Statically grounded ball, stem, & body
- Two-position locking
- Adjustable multi-piece PTFE "V" style packing
- Fully machined ISO 5211 mounting
- Cast bosses on the center-section and end caps for bleed & drain ports
- Fire safe "by design" (requires -24 suffix)
- Vacuum service to 29 in of Hg.
- CE Marking, 1-1/4" and larger (add "-CE" suffix)
- 250 psig saturated steam

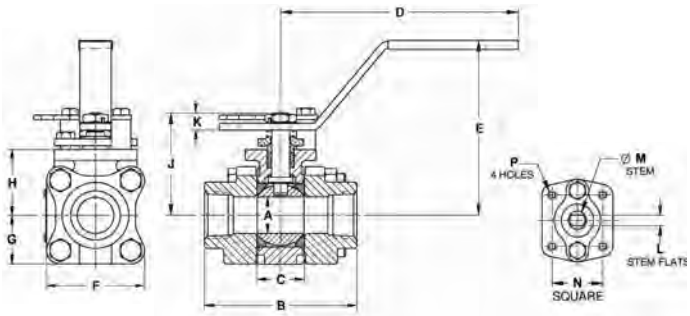

STANDARD MATERIAL LIST

	PART	MATERIAL
1	Body	ASTM A995 6A
2	End Caps	ASTM A995 6A
3	Ball	ASTM A276/A479 Alloy 2507
4	Stem	ASTM A276/A479 Alloy 2507
5	Seat	Multi-Seal
6	Packing	PTFE
7	Stem Bearing	PEEK/PTFE
8	Body Gasket	PTFE Spiral Wound
9	Body Bolts	ASTM A193-Gr.B8M3
10	Body Nuts	ASTM A194-Gr.8
11	Stop Bolts	18-8 Stainless Steel
12	Gland Bolts	ASTM A193-Gr.B8
13	Handle Nut/Screw	300 Series Stainless Steel
14	Packing Gland	ASTM A276-316SS
15	Gland Plate	300 Series Stainless Steel
16	Lever Handle	300 Series Stainless Steel
17	Lock Plate	300 Series Stainless Steel
18	Stops	300 Series Stainless Steel
19	Internal Grounding Spring	300 Series Stainless Steel
20	External Grounding Spring	300 Series Stainless Steel

OPTIONS AVAILABLE

(MORE INFORMATION IN SECTION J)

- Minimum quantities apply
- To specify an option, replace the "01" standard suffix with the suffix of the option.
- To specify multiple options, replace the "01" suffix with the desired suffixes in the numerical order shown below. NOTE: Not all suffixes can be combined together.

(SUFFIX)	OPTION	SIZES
-01	Standard Configuration	All
-P -01-	BSPP (Parallel) Thread Connection	All
-T -01-	BSPT (Tapered) Thread Connection	All
-04-	2-1/4" Stem Extension (Carbon Steel, Zinc Plated)	All
-14-	Vented Ball	All
-15-	Stainless Steel Locking Round Handle	All
-21-	UHMWPE Seats w/ Graphite Seals	All
-24-	Graphite Packing, Spiral Wound Graphite Body Seal, PTFE/PEEK Bearing (Fire Safe by Design)	All
-38-	Peek Seats, Graphite Stem Packing & Gaskets	All
-49-	No Lubrication. Assembled Dry	All
-57-	Cleaned for Oxygen Service	All
-62-	Center Section Only	All
-63-	NPT x Socketweld	All
-69-	Drilled & Tapped Purge & Drains	All
-70-	4" Extended Bonnet	All
-76-	Live Loaded (Lever Operated)	All
-77-	Live Loaded (Actuated)	All
-90-	Double Packed 4" Extended Bonnet	All
-9P-	Double Packed 4" Extended Bonnet w/ Monitoring Port	All
-CE-	CE Marking	1-1/4" to 2"
-EF-	Graphite Packing (API 641 Compliant)	3/4" to 2"
-KF-	PCTFE Stem Bearing	All
-SR-	Spring Return Handle	1/4" to 1"
-ZP1-	Fugitive Emissions Packing (Viton)	All
-ZP2-	Fugitive Emissions Packing (Buna-N)	All
-ZP3-	Fugitive Emissions Packing (Kalrez)	All

Pressure/Temperature Ratings - Page M-29, Graph No. 42

DIMENSIONS

PART NO.	SIZE	A	B	C	D	E	F	G	H	J	K	L	M	N	P	WT.
86K-101-01	1/4"	0.37	2.80	0.89	5.12	3.02	2.02	1.01	1.39	1.97	0.23	0.245	0.375	1.00	10-24	2.3
86K-102-01	3/8	0.50	2.80	0.89	5.12	3.02	2.02	1.01	1.39	1.97	0.23	0.245	0.375	1.00	10-24	2.3
86K-103-01	1/2"	0.50	2.80	0.89	5.12	3.02	2.02	1.01	1.39	1.97	0.23	0.245	0.375	1.00	10-24	2.3
86K-104-01	3/4"	0.75	3.68	1.10	5.53	3.40	2.40	1.20	1.65	2.35	0.24	0.312	0.500	1.392	1/4-20	4.0
86K-105-01	1"	1.00	4.19	1.31	6.53	4.80	2.67	1.34	1.80	2.80	0.48	0.287	0.500	1.392	1/4-20	5.7
86K-106-01	1-1/4"	1.50	4.50	1.97	6.65	4.70	3.84	1.92	2.49	3.89	0.72	0.412	0.625	1.949	5/16-18	14.2
86K-107-01	1-1/2"	1.50	4.98	1.97	6.65	4.70	3.84	1.92	2.49	3.89	0.72	0.412	0.625	1.949	5/16-18	14.4
86K-108-01	2"	2.00	5.86	2.56	8.40	5.47	4.56	2.46	3.17	4.74	0.80	0.477	0.750	1.949	5/16-18	24.4

REV. 17SEP19

86K-200 SERIES

SUPER DUPLEX STAINLESS STEEL 3-PIECE FULL PORT
CLASS 600 SOCKET WELD BALL VALVE

5 YEAR WARRANTY MADE IN USA

STANDARD COMPLIANCE

- Valve Design: ASME B16.34, Class 600, API 608
- End Connections: Socket-weld per ASME B16.11
- Valve Marking: ASME B16.34
- Production Testing: ASME B16.34

FEATURES

- 3-piece construction w/ enclosed fasteners
- Full port
- Stainless steel trim & hardware
- Swing-out center section
- Pressure balanced solid ball
- Compression controlled spiral wound gaskets
- Anti-blowout one piece bottom entry stem
- Statically grounded ball, stem, & body
- Two-position locking
- Adjustable multi-piece PTFE "V" style packing
- Fully machined ISO 5211 mounting
- Cast bosses on the center-section and end caps for bleed & drain ports
- Fire safe "by design" (requires -24 suffix)
- Vacuum service to 29 in of Hg.
- CE Marking, 1-1/4" and larger (add "-CE" suffix)
- 250 psig saturated steam

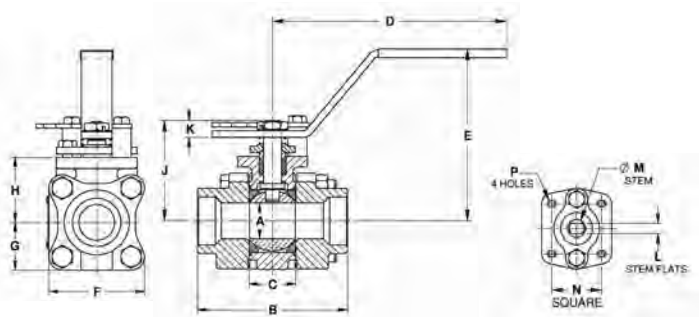

OPTIONS AVAILABLE

(MORE INFORMATION IN SECTION J)

- Minimum quantities apply
- To specify an option, replace the "01" standard suffix with the suffix of the option.
- To specify multiple options, replace the "01" suffix with the desired suffixes in the numerical order shown below. NOTE: Not all suffixes can be combined together.

(SUFFIX)	OPTION	SIZES
-01	Standard Configuration	All
-04-	2-1/4" Stem Extension (Carbon Steel, Zinc Plated)	All
-14-	Vented Ball	All
-15-	Stainless Steel Locking Round Handle	All
-21-	UHMWPE Seats w/ Graphite Seals	All
-24-	Graphite Packing, Spiral Wound Graphite Body Seal, PTFE/PEEK Bearing (Fire Safe by Design)	All
-38-	Peek Seats, Graphite Stem Packing & Gaskets	All
-49-	No Lubrication. Assembled Dry	All
-57-	Cleaned for Oxygen Service	All
-62-	Center Section Only	All
-69-	Drilled & Tapped Purge & Drains	All
-70-	4" Extended Bonnet	All
-76-	Live Loaded (Lever Operated)	All
-77-	Live Loaded (Actuated)	All
-90-	Double Packed 4" Extended Bonnet	All
-9P-	Double Packed 4" Extended Bonnet w/ Monitoring Port	All
-CE-	CE Marking	1-1/4" to 2"
-EF-	Graphite Packing (API 641 Compliant)	3/4" to 2"
-KF-	PCTFE Stem Bearing	All
-SR-	Spring Return Handle	1/4" to 1"
-ZP1-	Fugitive Emissions Packing (Viton)	All
-ZP2-	Fugitive Emissions Packing (Buna-N)	All
-ZP3-	Fugitive Emissions Packing (Kalrez)	All

Pressure/Temperature Ratings - Page M-29, Graph No. 42

STANDARD MATERIAL LIST

	PART	MATERIAL
1	Body	ASTM A995 6A
2	End Caps	ASTM A995 6A
3	Ball	ASTM A276/A479 Alloy 2507
4	Stem	ASTM A276/A479 Alloy 2507
5	Seat	Multi-Seal
6	Packing	PTFE
7	Stem Bearing	PEEK/PTFE
8	Body Gasket	PTFE Spiral Wound
9	Body Bolts	ASTM A193-Gr.B8M3
10	Body Nuts	ASTM A194-Gr.8
11	Stop Bolts	18-8 Stainless Steel
12	Gland Bolts	ASTM A193-Gr.B8
13	Handle Nut/Screw	300 Series Stainless Steel
14	Packing Gland	ASTM A276-316SS
15	Gland Plate	300 Series Stainless Steel
16	Lever Handle	300 Series Stainless Steel
17	Lock Plate	300 Series Stainless Steel
18	Stops	300 Series Stainless Steel
19	Internal Grounding Spring	300 Series Stainless Steel
20	External Grounding Spring	300 Series Stainless Steel

DIMENSIONS

PART NO.	SIZE	A	B	C	D	E	F	G	H	J	K	L	M	N	P	WT.
86K-201-01	1/4"	0.37	2.80	0.89	5.12	3.02	2.02	1.01	1.39	1.97	0.23	0.245	0.375	1.00	10-24	2.3
86K-202-01	3/8"	0.50	2.80	0.89	5.12	3.02	2.02	1.01	1.39	1.97	0.23	0.245	0.375	1.00	10-24	2.3
86K-203-01	1/2"	0.50	2.80	0.89	5.12	3.02	2.02	1.01	1.39	1.97	0.23	0.245	0.375	1.00	10-24	2.3
86K-204-01	3/4"	0.75	3.68	1.10	5.53	3.40	2.40	1.20	1.65	2.35	0.24	0.312	0.500	1.392	1/4-20	4.0
86K-205-01	1"	1.00	4.19	1.31	6.53	4.80	2.67	1.34	1.80	2.80	0.48	0.287	0.500	1.392	1/4-20	5.7
86K-206-01	1-1/4"	1.50	4.50	1.97	6.65	4.70	3.84	1.92	2.49	3.89	0.72	0.412	0.625	1.949	5/16-18	14.2
86K-207-01	1-1/2"	1.50	4.98	1.97	6.65	4.70	3.84	1.92	2.49	3.89	0.72	0.412	0.625	1.949	5/16-18	14.4
86K-208-01	2"	2.00	5.86	2.56	8.40	5.47	4.56	2.46	3.17	4.74	0.80	0.477	0.750	1.949	5/16-18	24.4

REV. 17SEP19

aalberts integrated piping systems

86K-300 SERIES

SUPER DUPLEX STAINLESS STEEL 3-PIECE FULL PORT
CLASS 600 SCH. 5 BUTT WELD BALL VALVE

STANDARD COMPLIANCE

- Valve Design: ASME B16.34, Class 600, API 608
- End Connections: Butt-Weld per ASME B16.25
- Valve Marking: ASME B16.34
- Production Testing: ASME B16.34

FEATURES

- 3-piece construction w/ enclosed fasteners
- Full port
- Stainless steel trim & hardware
- Swing-out center section
- Pressure balanced solid ball
- Compression controlled spiral wound gaskets
- Anti-blowout one piece bottom entry stem
- Statically grounded ball, stem, & body
- Two-position locking
- Adjustable multi-piece PTFE "V" style packing
- Fully machined ISO 5211 mounting
- Cast bosses on the center-section and end caps for bleed & drain ports
- Fire safe "by design" (requires -24 suffix)
- Vacuum service to 29 in of Hg.
- CE Marking, 1-1/2" and larger (add "-CE" suffix)
- 250 psig saturated steam

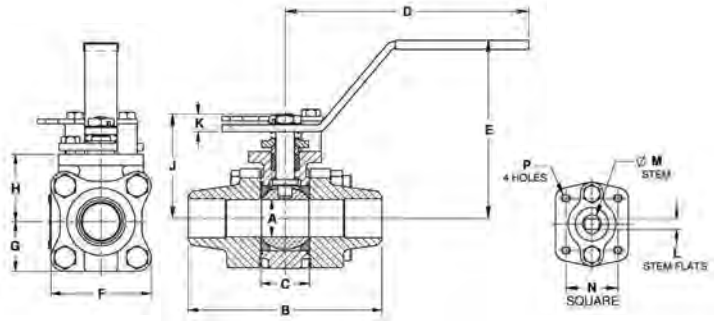

VARIATIONS AVAILABLE

- 86B-400 Schedule 10 Butt-Weld
- 86B-500 Schedule 40 Butt-Weld
- 86B-600 Schedule 80 Butt-Weld

OPTIONS AVAILABLE

(MORE INFORMATION IN SECTION J)

- Minimum quantities apply
- To specify an option, replace the "01" standard suffix with the suffix of the option.
- To specify multiple options, replace the "01" suffix with the desired suffixes in the numerical order shown below. NOTE: Not all suffixes can be combined together.

(SUFFIX)	OPTION	SIZES
-01	Standard Configuration	All
-04-	2-1/4" Stem Extension (Carbon Steel, Zinc Plated)	All
-14-	Vented Ball	All
-15-	Stainless Steel Locking Round Handle	All
-21-	UHMWPE Seats w/ Graphite Seals	All
-24-	Graphite Packing, Spiral Wound Graphite Body Seal, PTFE/PEEK Bearing (Fire Safe by Design)	All
-38-	Peek Seats, Graphite Stem Packing & Gaskets	All
-49-	No Lubrication. Assembled Dry	All
-57-	Cleaned for Oxygen Service	All
-62-	Center Section Only	All
-66-	FNPT x Buttweld	All
-69-	Drilled & Tapped Purge & Drains	All
-70-	4" Extended Bonnet	All
-76-	Live Loaded (Lever Operated)	All
-77-	Live Loaded (Actuated)	All
-90-	Double Packed 4" Extended Bonnet	All
-9P-	Double Packed 4" Extended Bonnet w/ Monitoring Port	All
-CE-	CE Marking	1-1/2" to 2"
-EF-	Graphite Packing (API 641 Compliant)	3/4" to 2"
-KF-	PCTFE Stem Bearing	All
-SR-	Spring Return Handle	1/2" to 1"
-ZP1-	Fugitive Emissions Packing (Viton)	All
-ZP2-	Fugitive Emissions Packing (Buna-N)	All
-ZP3-	Fugitive Emissions Packing (Kalrez)	All

Pressure/Temperature Ratings - Page M-29, Graph No. 42

STANDARD MATERIAL LIST

	PART	MATERIAL
1	Body	ASTM A995 6A
2	End Caps	ASTM A995 6A
3	Ball	ASTM A276/A479 Alloy 2507
4	Stem	ASTM A276/A479 Alloy 2507
5	Seat	Multi-Seal
6	Packing	PTFE
7	Stem Bearing	PEEK/PTFE
8	Body Gasket	PTFE Spiral Wound
9	Body Bolts	ASTM A193-Gr.B8M3
10	Body Nuts	ASTM A194-Gr.8
11	Stop Bolts	18-8 Stainless Steel
12	Gland Bolts	ASTM A193-Gr.B8
13	Handle Nut/Screw	300 Series Stainless Steel
14	Packing Gland	ASTM A276-316SS
15	Gland Plate	300 Series Stainless Steel
16	Lever Handle	300 Series Stainless Steel
17	Lock Plate	300 Series Stainless Steel
18	Stops	300 Series Stainless Steel
19	Internal Grounding Spring	300 Series Stainless Steel
20	External Grounding Spring	300 Series Stainless Steel

DIMENSIONS

PART NO.	SIZE	A	B	C	D	E	F	G	H	J	K	L	M	N	P	WT.
86K-303-01	1/2"	0.50	3.80	0.89	5.12	3.02	2.02	1.01	1.39	1.97	0.23	0.245	0.375	1.00	10-24	2.3
86K-304-01	3/4"	0.75	4.66	1.10	5.53	3.40	2.40	1.20	1.65	2.35	0.24	0.312	0.500	1.392	1/4-20	4.0
86K-305-01	1"	1.00	5.19	1.31	6.53	4.80	2.67	1.34	1.80	2.80	0.48	0.287	0.500	1.392	1/4-20	5.7
86K-307-01	1-1/2"	1.50	5.96	1.97	6.65	4.70	3.84	1.92	2.49	3.89	0.72	0.412	0.625	1.949	5/16-18	14.4
86K-308-01	2"	2.00	6.84	2.56	8.40	5.47	4.56	2.46	3.17	4.74	0.80	0.477	0.750	1.949	5/16-18	24.4

REV. 17SEP19

86K-400 SERIES

SUPER DUPLEX STAINLESS STEEL 3-PIECE FULL PORT
CLASS 600 SCH. 10 BUTT WELD BALL VALVE

5 YEAR WARRANTY MADE IN USA

STANDARD COMPLIANCE

- Valve Design: ASME B16.34, Class 600, API 608
- End Connections: Butt-Weld per ASME B16.25
- Valve Marking: ASME B16.34
- Production Testing: ASME B16.34

FEATURES

- 3-piece construction w/ enclosed fasteners
- Full port
- Stainless steel trim & hardware
- Swing-out center section
- Pressure balanced solid ball
- Compression controlled spiral wound gaskets
- Anti-blowout one piece bottom entry stem
- Statically grounded ball, stem, & body
- Two-position locking
- Adjustable multi-piece PTFE "V" style packing
- Fully machined ISO 5211 mounting
- Cast bosses on the center-section and end caps for bleed & drain ports
- Fire safe "by design" (requires -24 suffix)
- Vacuum service to 29 in of Hg.
- CE Marking, 1-1/2" and larger (add "-CE" suffix)
- 250 psig saturated steam

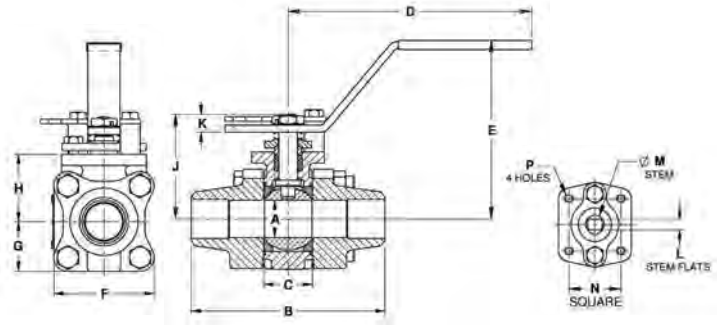

VARIATIONS AVAILABLE

- 86B-300 Schedule 5 Butt-Weld
- 86B-500 Schedule 40 Butt-Weld
- 86B-600 Schedule 80 Butt-Weld

OPTIONS AVAILABLE

(MORE INFORMATION IN SECTION J)

- Minimum quantities apply
- To specify an option, replace the "01" standard suffix with the suffix of the option.
- To specify multiple options, replace the "01" suffix with the desired suffixes in the numerical order shown below. NOTE: Not all suffixes can be combined together.

(SUFFIX)	OPTION	SIZES
-01	Standard Configuration	All
-04-	2-1/4" Stem Extension (Carbon Steel, Zinc Plated)	All
-14-	Vented Ball	All
-15-	Stainless Steel Locking Round Handle	All
-21-	UHMWPE Seats w/ Graphite Seals	All
-24-	Graphite Packing, Spiral Wound Graphite Body Seal, PTFE/PEEK Bearing (Fire Safe by Design)	All
-38-	Peek Seats, Graphite Stem Packing & Gaskets	All
-49-	No Lubrication. Assembled Dry	All
-57-	Cleaned for Oxygen Service	All
-62-	Center Section Only	All
-66-	FNPT x Buttweld	All
-69-	Drilled & Tapped Purge & Drains	All
-70-	4" Extended Bonnet	All
-76-	Live Loaded (Lever Operated)	All
-77-	Live Loaded (Actuated)	All
-90-	Double Packed 4" Extended Bonnet	All
-9P-	Double Packed 4" Extended Bonnet w/ Monitoring Port	All
-CE-	CE Marking	1-1/2" to 2"
-EF-	Graphite Packing (API 641 Compliant)	3/4" to 2"
-KF-	PCTFE Stem Bearing	All
-SR-	Spring Return Handle	1/2" to 1"
-ZP1-	Fugitive Emissions Packing (Viton)	All
-ZP2-	Fugitive Emissions Packing (Buna-N)	All
-ZP3-	Fugitive Emissions Packing (Kalrez)	All

Pressure/Temperature Ratings - Page M-29, Graph No. 42

STANDARD MATERIAL LIST

	PART	MATERIAL
1	Body	ASTM A995 6A
2	End Caps	ASTM A995 6A
3	Ball	ASTM A276/A479 Alloy 2507
4	Stem	ASTM A276/A479 Alloy 2507
5	Seat	Multi-Seal
6	Packing	PTFE
7	Stem Bearing	PEEK/PTFE
8	Body Gasket	PTFE Spiral Wound
9	Body Bolts	ASTM A193-Gr.B8M3
10	Body Nuts	ASTM A194-Gr.8
11	Stop Bolts	18-8 Stainless Steel
12	Gland Bolts	ASTM A193-Gr.B8
13	Handle Nut/Screw	300 Series Stainless Steel
14	Packing Gland	ASTM A276-316SS
15	Gland Plate	300 Series Stainless Steel
16	Lever Handle	300 Series Stainless Steel
17	Lock Plate	300 Series Stainless Steel
18	Stops	300 Series Stainless Steel
19	Internal Grounding Spring	300 Series Stainless Steel
20	External Grounding Spring	300 Series Stainless Steel

DIMENSIONS

PART NO.	SIZE	A	B	C	D	E	F	G	H	J	K	L	M	N	P	WT.
86K-403-01	1/2"	0.50	3.80	0.89	5.12	3.02	2.02	1.01	1.39	1.97	0.23	0.245	0.375	1.00	10-24	2.3
86K-404-01	3/4"	0.75	4.66	1.10	5.53	3.40	2.40	1.20	1.65	2.35	0.24	0.312	0.500	1.392	1/4-20	4.0
86K-405-01	1"	1.00	5.19	1.31	6.53	4.80	2.67	1.34	1.80	2.80	0.48	0.287	0.500	1.392	1/4-20	5.7
86K-407-01	1-1/2"	1.50	5.96	1.97	6.65	4.70	3.84	1.92	2.49	3.89	0.72	0.412	0.625	1.949	5/16-18	14.4
86K-408-01	2"	2.00	6.84	2.56	8.40	5.47	4.56	2.46	3.17	4.74	0.80	0.477	0.750	1.949	5/16-18	24.4

REV. 17SEP19

aalberts integrated piping systems

86K-500 SERIES

SUPER DUPLEX STAINLESS STEEL 3-PIECE FULL PORT
CLASS 600 SCH. 40 BUTT WELD BALL VALVE

5 YEAR WARRANTY MADE IN USA

STANDARD COMPLIANCE

- Valve Design: ASME B16.34, Class 600, API 608
- End Connections: Butt-Weld per ASME B16.25
- Valve Marking: ASME B16.34
- Production Testing: ASME B16.34

FEATURES

- 3-piece construction w/ enclosed fasteners
- Full port
- •Stainless steel trim & hardware
- •Swing-out center section
- •Pressure balanced solid ball
- Compression controlled spiral wound gaskets
- Anti-blowout one piece bottom entry stem
- Statically grounded ball, stem, & body
- Two-position locking
- Adjustable multi-piece PTFE "V" style packing
- Fully machined ISO 5211 mounting
- Cast bosses on the center-section and end caps for bleed & drain ports
- Fire safe "by design" (requires -24 suffix)
- Vacuum service to 29 in of Hg.
- CE Marking, 1-1/2" and larger (add "-CE" suffix)
- 250 psig saturated steam

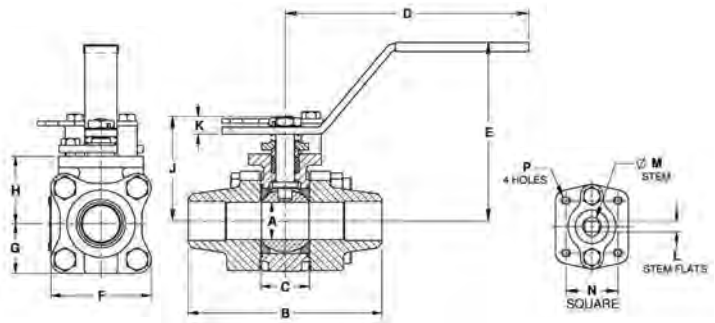

VARIATIONS AVAILABLE

- 86B-300 Schedule 5 Butt-Weld
- 86B-400 Schedule 10 Butt-Weld
- 86B-600 Schedule 80 Butt-Weld

OPTIONS AVAILABLE

(MORE INFORMATION IN SECTION J)

- Minimum quantities apply
- To specify an option, replace the "01" standard suffix with the suffix of the option.
- To specify multiple options, replace the "01" suffix with the desired suffixes in the numerical order shown below. NOTE: Not all suffixes can be combined together.

(SUFFIX)	OPTION	SIZES
-01	Standard Configuration	All
-04-	2-1/4" Stem Extension (Carbon Steel, Zinc Plated)	All
-14-	Vented Ball	All
-15-	Stainless Steel Locking Round Handle	All
-21-	UHMWPE Seats w/ Graphite Seals	All
-24-	Graphite Packing, Spiral Wound Graphite Body Seal, PTFE/PEEK Bearing (Fire Safe by Design)	All
-38-	Peek Seats, Graphite Stem Packing & Gaskets	All
-49-	No Lubrication. Assembled Dry	All
-57-	Cleaned for Oxygen Service	All
-62-	Center Section Only	All
-66-	FNPT x Buttweld	All
-69-	Drilled & Tapped Purge & Drains	All
-70-	4" Extended Bonnet	All
-76-	Live Loaded (Lever Operated)	All
-77-	Live Loaded (Actuated)	All
-90-	Double Packed 4" Extended Bonnet	All
-9P-	Double Packed 4" Extended Bonnet w/ Monitoring Port	All
-CE-	CE Marking	1-1/2" to 2"
-EF-	Graphite Packing (API 641 Compliant)	3/4" to 2"
-KF-	PCTFE Stem Bearing	All
-SR-	Spring Return Handle	1/2" to 1"
-ZP1-	Fugitive Emissions Packing (Viton)	All
-ZP2-	Fugitive Emissions Packing (Buna-N)	All
-ZP3-	Fugitive Emissions Packing (Kalrez)	All

Pressure/Temperature Ratings - Page M-29, Graph No. 42

STANDARD MATERIAL LIST

	PART	MATERIAL
1	Body	ASTM A995 6A
2	End Caps	ASTM A995 6A
3	Ball	ASTM A276/A479 Alloy 2507
4	Stem	ASTM A276/A479 Alloy 2507
5	Seat	Multi-Seal
6	Packing	PTFE
7	Stem Bearing	PEEK/PTFE
8	Body Gasket	PTFE Spiral Wound
9	Body Bolts	ASTM A193-Gr.B8M3
10	Body Nuts	ASTM A194-Gr.8
11	Stop Bolts	18-8 Stainless Steel
12	Gland Bolts	ASTM A193-Gr.B8
13	Handle Nut/Screw	300 Series Stainless Steel
14	Packing Gland	ASTM A276-316SS
15	Gland Plate	300 Series Stainless Steel
16	Lever Handle	300 Series Stainless Steel
17	Lock Plate	300 Series Stainless Steel
18	Stops	300 Series Stainless Steel
19	Internal Grounding Spring	300 Series Stainless Steel
20	External Grounding Spring	300 Series Stainless Steel

DIMENSIONS

PART NO.	SIZE	A	B	C	D	E	F	G	H	J	K	L	M	N	P	WT.
86K-503-01	1/2"	0.50	3.80	0.89	5.12	3.02	2.02	1.01	1.39	1.97	0.23	0.245	0.375	1.00	10-24	2.3
86K-504-01	3/4"	0.75	4.66	1.10	5.53	3.40	2.40	1.20	1.65	2.35	0.24	0.312	0.500	1.392	1/4-20	4.0
86K-505-01	1"	1.00	5.19	1.31	6.53	4.80	2.67	1.34	1.80	2.80	0.48	0.287	0.500	1.392	1/4-20	5.7
86K-507-01	1-1/2"	1.50	5.96	1.97	6.65	4.70	3.84	1.92	2.49	3.89	0.72	0.412	0.625	1.949	5/16-18	14.4
86K-508-01	2"	2.00	6.84	2.56	8.40	5.47	4.56	2.46	3.17	4.74	0.80	0.477	0.750	1.949	5/16-18	24.4

REV. 17SEP19

86K-600 SERIES

SUPER DUPLEX STAINLESS STEEL 3-PIECE FULL PORT
CLASS 600 SCH. 80 BUTT WELD BALL VALVE

5 YEAR WARRANTY MADE IN USA

STANDARD COMPLIANCE

- Valve Design: ASME B16.34, Class 600, API 608
- End Connections: Butt-Weld per ASME B16.25
- Valve Marking: ASME B16.34
- Production Testing: ASME B16.34

FEATURES

- 3-piece construction w/ enclosed fasteners
- Full port
- Stainless steel trim & hardware
- Swing-out center section
- Pressure balanced solid ball
- Compression controlled spiral wound gaskets
- Anti-blowout one piece bottom entry stem
- Statically grounded ball, stem, & body
- Two-position locking
- Adjustable multi-piece PTFE "V" style packing
- Fully machined ISO 5211 mounting
- Cast bosses on the center-section and end caps for bleed & drain ports
- Fire safe "by design" (requires -24 suffix)
- Vacuum service to 29 in of Hg.
- CE Marking, 1-1/2" and larger (add "-CE" suffix)
- 250 psig saturated steam

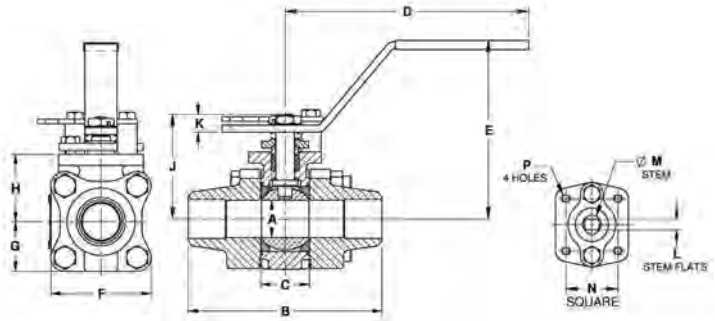

VARIATIONS AVAILABLE

- 86B-300 Schedule 5 Butt-Weld
- 86B-400 Schedule 10 Butt-Weld
- 86B-500 Schedule 40 Butt-Weld

OPTIONS AVAILABLE

(MORE INFORMATION IN SECTION J)

- Minimum quantities apply
- To specify an option, replace the "01" standard suffix with the suffix of the option.
- To specify multiple options, replace the "01" suffix with the desired suffixes in the numerical order shown below. NOTE: Not all suffixes can be combined together.

(SUFFIX)	OPTION	SIZES
-01	Standard Configuration	All
-04-	2-1/4" Stem Extension (Carbon Steel, Zinc Plated)	All
-14-	Vented Ball	All
-15-	Stainless Steel Locking Round Handle	All
-21-	UHMWPE Seats w/ Graphite Seals	All
-24-	Graphite Packing, Spiral Wound Graphite Body Seal, PTFE/PEEK Bearing (Fire Safe by Design)	All
-38-	Peek Seats, Graphite Stem Packing & Gaskets	All
-49-	No Lubrication. Assembled Dry	All
-57-	Cleaned for Oxygen Service	All
-62-	Center Section Only	All
-66-	FNPT x Buttweld	All
-69-	Drilled & Tapped Purge & Drains	All
-70-	4" Extended Bonnet	All
-76-	Live Loaded (Lever Operated)	All
-77-	Live Loaded (Actuated)	All
-90-	Double Packed 4" Extended Bonnet	All
-9P-	Double Packed 4" Extended Bonnet w/ Monitoring Port	All
-CE-	CE Marking	1-1/2" to 2"
-EF-	Graphite Packing (API 641 Compliant)	3/4" to 2"
-KF-	PCTFE Stem Bearing	All
-SR-	Spring Return Handle	1/2" to 1"
-ZP1-	Fugitive Emissions Packing (Viton)	All
-ZP2-	Fugitive Emissions Packing (Buna-N)	All
-ZP3-	Fugitive Emissions Packing (Kalrez)	All

Pressure/Temperature Ratings - Page M-29, Graph No. 42

STANDARD MATERIAL LIST

	PART	MATERIAL
1	Body	ASTM A995 6A
2	End Caps	ASTM A995 6A
3	Ball	ASTM A276/A479 Alloy 2507
4	Stem	ASTM A276/A479 Alloy 2507
5	Seat	Multi-Seal
6	Packing	PTFE
7	Stem Bearing	PEEK/PTFE
8	Body Gasket	PTFE Spiral Wound
9	Body Bolts	ASTM A193-Gr.B8M3
10	Body Nuts	ASTM A194-Gr.8
11	Stop Bolts	18-8 Stainless Steel
12	Gland Bolts	ASTM A193-Gr.B8
13	Handle Nut/Screw	300 Series Stainless Steel
14	Packing Gland	ASTM A276-316SS
15	Gland Plate	300 Series Stainless Steel
16	Lever Handle	300 Series Stainless Steel
17	Lock Plate	300 Series Stainless Steel
18	Stops	300 Series Stainless Steel
19	Internal Grounding Spring	300 Series Stainless Steel
20	External Grounding Spring	300 Series Stainless Steel

DIMENSIONS

PART NO.	SIZE	A	B	C	D	E	F	G	H	J	K	L	M	N	P	WT.
86K-603-01	1/2"	0.50	3.80	0.89	5.12	3.02	2.02	1.01	1.39	1.97	0.23	0.245	0.375	1.00	10-24	2.3
86K-604-01	3/4"	0.75	4.66	1.10	5.53	3.40	2.40	1.20	1.65	2.35	0.24	0.312	0.500	1.392	1/4-20	4.0
86K-605-01	1"	1.00	5.19	1.31	6.53	4.80	2.67	1.34	1.80	2.80	0.48	0.287	0.500	1.392	1/4-20	5.7
86K-607-01	1-1/2"	1.50	5.96	1.97	6.65	4.70	3.84	1.92	2.49	3.89	0.72	0.412	0.625	1.949	5/16-18	14.4
86K-608-01	2"	2.00	6.84	2.56	8.40	5.47	4.56	2.46	3.17	4.74	0.80	0.477	0.750	1.949	5/16-18	24.4

REV. 17SEP19

aalberts integrated piping systems

86R-140 SERIES

CARBON STEEL 3-PIECE FULL PORT BALL VALVE
W/ ACTUATOR READY ISO MOUNTING PAD
1-1/2" & 2"

5 YEAR WARRANTY MADE IN USA

Full Port Threaded, 800 CWP (psig), Cold Non-Shock. 150 psig Saturated Steam.
Vacuum Service to 29 inches Hg.
MSS SP-110 Compliant.
Meets NACE MR0175 (2000) & MR0103 (2012)

FEATURES

- Multi-piece packing set
- ISO 5211 mounting pad
- Blowout-proof stem design
- In-line repairable
- Adjustable packing gland
- Investment cast components
- Reinforced seats and seals
- Full port configuration

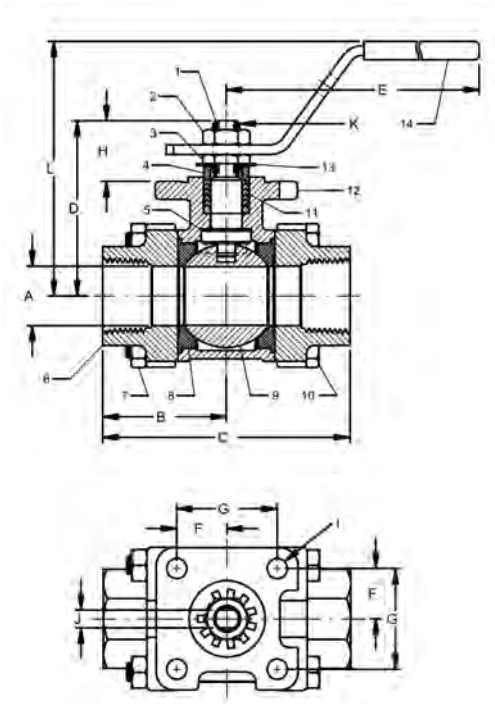

OPTIONS AVAILABLE

(MORE INFORMATION IN SECTION J)

- Minimum quantities apply
- To specify an option, replace the "01" standard suffix with the suffix of the option.
- To specify multiple options, replace the "01" suffix with the desired suffixes in the numerical order shown below. NOTE: Not all suffixes can be combined together.

(SUFFIX)	OPTION	SIZES
-01	Standard Configuration	All
-P -01-	BSPP (Parallel) Thread Connection	All
-T -01-	BSPT (Tapered) Thread Connection	All
-02-	Static Grounded	All
-04-	2-1/4" Stem Extension (Carbon Steel, Zinc Plated)	All
-08-	90° Reversed Stem	All
-10-	SS Lever & Nut	All
-14-	Vented Ball	All
-18-	Plain Yellow Grip	All
-21-	UHMWPE Seats (Non-PTFE)	All
-24-	Graphite Packing	All
-27-	Latch Lock Lever	All
-35-	PTFE Trim	All
-36-	SS Stainless Steel Locking Round Handle	All
-39-	SS Hi-Rise Locking Wheel Handle, SS Nut	All
-49-	No Lubrication. Assembled Dry	All
-56-	Multifill Seats & Graphite Packing	All
-59-	SS External Trim - 3-Piece Valves	All
-60-	Grounded Ball & Stem	All
-63-	NPT x Socket Weld	All
-66-	NPT x Buttweld	All
-67-	Cleaned for Industrial Gases	All
-AR-	Less Handle & Stop - Add Belleville Washers	All
-WB-	With Lever & Belleville Washers	All

Pressure/Temperature Ratings - Page M-12, Graph No. 7

STANDARD MATERIAL LIST

	PART	MATERIAL
1	Stem	A276-316
2	Jam nut	Steel, zinc plated
3	Low profile nut	316 SS
4	Gland	A276-316
5	Stem bearing	RPTFE
6	End cap (2)	A216-WCB
7	Hex nut (4)	Steel, gr. 8, zinc plated
8	Seat (2)	RPTFE
9	Ball	316 SS
10	Body bolt (4)	Steel, gr. 8, zinc plated
11	Stem packing	MPTFE
12	Body	ASTM A216-WCB
13	Lock tab washer	304 SS
14	Lever and grip	Steel, zinc plated w/ vinyl

DIMENSIONS

PART NO.	SIZE	A	B	C	D	E	F	G	H	I	J (FLATS)	K (THREADS.)UNF	L
83R-147-01	1-1/2"	1.50	2.59	5.18	3.49	8.06	.98	1.95	1.16	0.34	.370/.372	5/8-18	4.35
83R-148-01	2"	2.00	3.01	6.03	3.95	8.06	.98	1.95	1.16	0.34	.370/.372	5/8-18	4.85

83R-140 SERIES

CARBON STEEL 3-PIECE FULL PORT BALL VALVE
W/ ACTUATOR READY ISO MOUNTING PAD
3”

5 YEAR WARRANTY MADE IN USA

Full Port Threaded, 800 CWP (psig), Cold Non-Shock. 150 psig Saturated Steam.
Vacuum Service to 29 inches Hg.
MSS SP-110 Compliant.
Meets NACE MR0175 (2000) & MR0103 (2012)

FEATURES

- Multi-piece packing set
- ISO 5211 mounting pad
- Blowout-proof stem design
- In-line repairable
- Adjustable packing gland
- Investment cast components
- Reinforced seats and seals
- Full port configuration

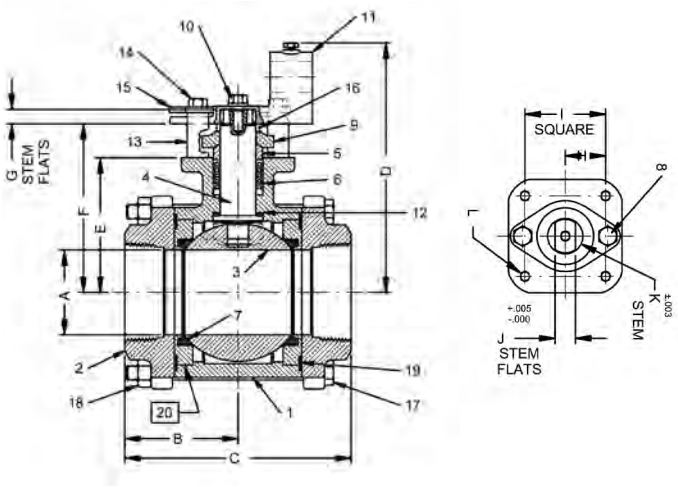

OPTIONS AVAILABLE

(MORE INFORMATION IN SECTION J)

- Minimum quantities apply
- To specify an option, replace the “01” standard suffix with the suffix of the option.
- To specify multiple options, replace the “01” suffix with the desired suffixes in the numerical order shown below. NOTE: Not all suffixes can be combined together.

(SUFFIX)	OPTION	SIZES
-01	Standard Configuration	All
-02-	Static Grounded	All
-14-	Vented Ball	All
-24-	Graphite Packing	All
-35-	PTFE Trim	All
-49-	No Lubrication. Assembled Dry	All
-60-	Grounded Ball & Stem	All
-63-	NPT x Socket Weld	All
-67-	Cleaned for Industrial Gases	All
-70-	4” Extended Bonnet	All

Pressure/Temperature Ratings - Page M-12, Graph No. 7

STANDARD MATERIAL LIST

	PART	MATERIAL
1	Body	ASTM A216-WCB
2	End Caps	ASTM A216-WCB
3	Ball	316 SS
4	Stem	A276-316
5	Packing Gland	Carbon Steel
6	Stem Seal	MPTFE
7	Seats (2)	RPTFE
8	Gland Screws (2)	Stainless Steel
9	Gland Plate	Stainless Steel
10	Adapter Screw	Stainless Steel
11	Handle Adapter	Stainless Steel
12	Stem Bearing	RPTFE
13	Stops (2)	Stainless Steel
14	Stop Screws (2)	Stainless Steel
15	Lock Plate	Stainless Steel
16	Grounding Spring	Stainless Steel
17	Body Bolts (6)	Stainless Steel
18	Heavy Hex Nuts (6)	Stainless Steel
19	Body Seals (2)	RPTFE
20	Seat Holders (2)	Carbon Steel
21	Pipe Handle	(not shown)

DIMENSIONS

PART NO.	SIZE	A	B	C	D	E	F	G	H	I	J (FLATS)	K	L (THREADS.)UNF
83R-140-01	3”	3.00	4.00	8.00	8.80	4.75	5.94	0.50	1.420	2.840	0.725	1.250	3.28

aalberts integrated piping systems

83R-240 SERIES

CARBON STEEL 3-PIECE FULL PORT SOCKET WELD BALL VALVE
W/ ACTUATOR READY ISO MOUNTING PAD
1-1/2" & 2"

5 YEAR WARRANTY MADE IN USA

Socket Weld, 800 CWP (psig), Cold Non-Shock. 150 psig Saturated Steam.
Vacuum Service to 29 inches Hg.
MSS SP-110 Compliant.
Meets NACE MR0175 (2000) & MR0103 (2012)

FEATURES

- Multi-piece packing set
- ISO 5211 mounting pad
- Blowout-proof stem design
- In-line repairable
- Adjustable packing gland
- Investment cast components
- Reinforced seats and seals
- Full port configuration

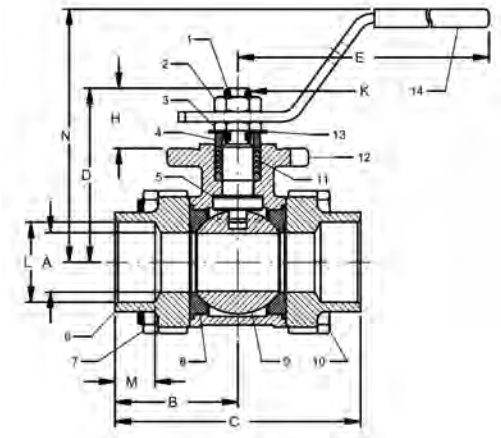

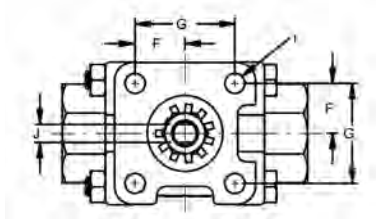

OPTIONS AVAILABLE

(MORE INFORMATION IN SECTION J)

- Minimum quantities apply
- To specify an option, replace the "01" standard suffix with the suffix of the option.
- To specify multiple options, replace the "01" suffix with the desired suffixes in the numerical order shown below. NOTE: Not all suffixes can be combined together.

(SUFFIX)	OPTION	SIZES
-01	Standard Configuration	All
-02-	Static Grounded	All
-04-	2-1/4" Stem Extension (Carbon Steel, Zinc Plated)	All
-08-	90° Reversed Stem	All
-10-	SS Lever & Nut	All
-14-	Vented Ball (see page J-4)	All
-18-	Plain Yellow Grip	All
-21-	UHMWPE Seats (Non-PTFE)	All
-24-	Graphite Packing	All
-27-	Latch Lock Lever	All
-35-	PTFE Trim	All
-36-	SS Stainless Steel Locking Round Handle	All
-39-	SS Hi-Rise Locking Wheel Handle, SS Nut	All
-49-	No Lubrication. Assembled Dry	All
-59-	SS External Trim - 3-Piece Valves	All
-60-	Grounded Ball & Stem	All
-67-	Cleaned for Industrial Gases	All
-AR-	Less Handle & Stop - Add Belleville Washers	All
-WB-	With Lever & Belleville Washers	All

Pressure/Temperature Ratings - Page M-12, Graph No. 7

STANDARD MATERIAL LIST

	PART	MATERIAL
1	Stem	A276-316
2	Jam nut	Steel, zinc plated
3	Low profile nut	316 SS
4	Gland	A276-316
5	Stem bearing	RPTFE
6	End cap (2)	A216-WCB
7	Hex nut (4)	Steel, gr. 8, zinc plated
8	Seat (2)	RPTFE
9	Ball	316 SS
10	Body bolt (4)	Steel, gr. 8, zinc plated
11	Stem packing	MPTFE
12	Body	ASTM A216-WCB
13	Lock tab washer	304 SS
14	Lever and grip	Steel, zinc plated w/ vinyl

DIMENSIONS

PART NO.	SIZE	A	B	C	D	E	F	G	H	I	J (FLATS)	K (THREADS.)UNF	L	M	N
83R-247-01	1-1/2"	1.50	2.59	5.18	3.49	8.06	0.98	1.95	1.16	0.34	.370/.372	5/8-18	1.915	0.87	4.38
83R-248-01	2"	2.00	3.01	6.03	3.95	8.06	0.98	1.95	1.16	0.34	.370/.372	5/8-18	2.405	1.05	4.85

83R-240 SERIES

CARBON STEEL 3-PIECE FULL PORT SOCKET WELD BALL VALVE
W/ ACTUATOR READY ISO MOUNTING PAD
3”

5 YEAR WARRANTY MADE IN USA

Socket Weld, 800 CWP (psig), Cold Non-Shock. 150 psig Saturated Steam.
Vacuum Service to 29 inches Hg.
MSS SP-110 Compliant.
Meets NACE MR0175 (2000) & MR0103 (2012)

FEATURES

- Multi-piece packing set
- ISO 5211 mounting pad
- Blowout-proof stem design
- In-line repairable
- Adjustable packing gland
- Investment cast components
- Reinforced seats and seals
- Full port configuration

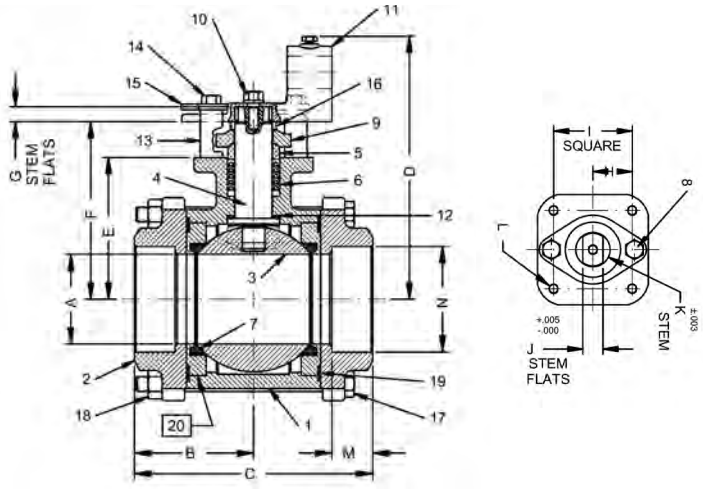

OPTIONS AVAILABLE

(MORE INFORMATION IN SECTION J)

- Minimum quantities apply
- To specify an option, replace the “01” standard suffix with the suffix of the option.
- To specify multiple options, replace the “01” suffix with the desired suffixes in the numerical order shown below. NOTE: Not all suffixes can be combined together.

(SUFFIX)	OPTION	SIZES
-01	Standard Configuration	All
-02-	Static Grounded	All
-14-	Vented Ball	All
-24-	Graphite Packing	All
-35-	PTFE Trim	All
-49-	No Lubrication. Assembled Dry	All
-60-	Grounded Ball & Stem	All
-67-	Cleaned for Industrial Gases	All
-70-	4” Extended Bonnet	All

Pressure/Temperature Ratings - Page M-12, Graph No. 7

STANDARD MATERIAL LIST

	PART	MATERIAL
1	Body	ASTM A216-WCB
2	End Caps	ASTM A216-WCB
3	Ball	316 SS
4	Stem	A276-316
5	Packing Gland	Carbon Steel
6	Stem Seal	MPTFE
7	Seats (2)	RPTFE
8	Gland Screws (2)	Stainless Steel
9	Gland Plate	Stainless Steel
10	Adapter Screw	Stainless Steel
11	Handle Adapter	Stainless Steel
12	Stem Bearing	RPTFE
13	Stops (2)	Stainless Steel
14	Stop Screws (2)	Stainless Steel
15	Lock Plate	Stainless Steel
16	Grounding Spring	Stainless Steel
17	Body Bolts (6)	Stainless Steel
18	Heavy Hex Nuts (6)	Stainless Steel
19	Body Seals (2)	RPTFE
20	Seat Holders (2)	Carbon Steel
21	Pipe Handle	(not shown)

DIMENSIONS

PART NO.	SIZE	A	B	C	D	E	F	G	H	I	J (FLATS)	K	L (THREADS.)UNF	M	N
83R-240-01	3”	3.00	4.00	8.00	8.80	4.75	5.94	0.50	1.420	2.840	0.725	1.250	3/8-16	1.37	3.54

aalberts integrated piping systems

83R-740 SERIES

CARBON STEEL 3-PIECE FULL PORT BUTT WELD BALL VALVE
W/ ACTUATOR READY ISO MOUNTING PAD
1-1/2" & 2"

5 YEAR WARRANTY MADE IN USA

Schedule 40 Butt-Weld Ends, 800 CWP (psig), Cold Non-Shock. 150 psig Saturated Steam.
Vacuum Service to 29 inches Hg.
MSS SP-72; Ball Valves with Flanged or Butt-Weld Ends for General Service.
Meets NACE MR0175 (2000) & MR0103 (2012)

FEATURES

- Multi-piece packing set
- ISO 5211 mounting pad
- Blowout-proof stem design
- In-line repairable
- Adjustable packing gland
- Investment cast components
- Reinforced seats and seals
- Full port configuration

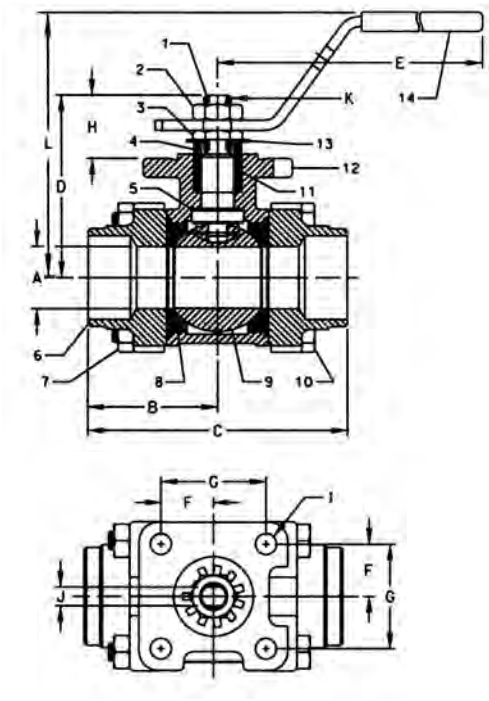

OPTIONS AVAILABLE

(MORE INFORMATION IN SECTION J)

- Minimum quantities apply
- To specify an option, replace the "01" standard suffix with the suffix of the option.
- To specify multiple options, replace the "01" suffix with the desired suffixes in the numerical order shown below. NOTE: Not all suffixes can be combined together.

(SUFFIX)	OPTION	
-01	Standard Configuration	All
-02-	Static Grounded	All
-04-	2-1/4" Stem Extension (Carbon Steel, Zinc Plated)	All
-08-	90° Reversed Stem	All
-10-	SS Lever & Nut	All
-14-	Vented Ball	All
-18-	Plain Yellow Grip	All
-21-	UHMWPE Seats (Non-PTFE)	All
-24-	Graphite Packing	All
-27-	Latch Lock Lever	All
-35-	PTFE Trim	All
-36-	SS Stainless Steel Locking Round Handle	All
-39-	SS Hi-Rise Locking Wheel Handle, SS Nut	All
-49-	No Lubrication. Assembled Dry	All
-59-	SS External Trim - 3-Piece Valves	All
-60-	Grounded Ball & Stem	All
-67-	Cleaned for Industrial Gases	All
-AR-	Less Handle & Stop - Add Belleville Washers	All
-WB-	With Lever & Belleville Washers	All

Pressure/Temperature Ratings - Page M-12, Graph No. 7

STANDARD MATERIAL LIST

	PART	MATERIAL
1	Stem	A276-316
2	Jam nut	Steel, zinc plated
3	Low profile nut	316 SS
4	Gland	A276-316
5	Stem bearing	RPTFE
6	End cap (2)	A216-WCB
7	Hex nut (4)	Steel, gr. 8, zinc plated
8	Seat (2)	RPTFE
9	Ball	316 SS
10	Body bolt (4)	Steel, gr. 8, zinc plated
11	Stem packing	MPTFE
12	Body	ASTM A216-WCB
13	Lock tab washer	304 SS
14	Lever and grip	Steel, zinc plated w/ vinyl

DIMENSIONS

PART NO.	SIZE	A	B	C	D	E	F	G	H	I	J (FLATS)	K (THREADS.)UNF	L
83R-747-01	1-1/2"	1.50	2.59	5.18	3.49	8.06	0.98	1.95	1.16	0.34	.370/.372	5/8-18	4.35
83R-748-01	2"	2.00	3.01	6.03	3.95	8.06	0.98	1.95	1.16	0.34	.370/.372	5/8-18	4.85

86R-100 SERIES

STAINLESS STEEL 3-PIECE FULL PORT BALL VALVE
W/ ACTUATOR READY ISO MOUNTING PAD
1-1/2" & 2"

5 YEAR WARRANTY MADE IN USA

Full Port Threaded, 800 CWP (psig), Cold Non-Shock. 150 psig Saturated Steam.
Vacuum Service to 29 inches Hg.
MSS SP-110 Compliant.
Meets NACE MR0175 (2000) & MR0103 (2012)

FEATURES

- Multi-piece packing set
- ISO 5211 mounting pad
- Blowout-proof stem design
- In-line repairable
- Adjustable packing gland
- Investment cast components
- Reinforced seats and seals
- Full port configuration

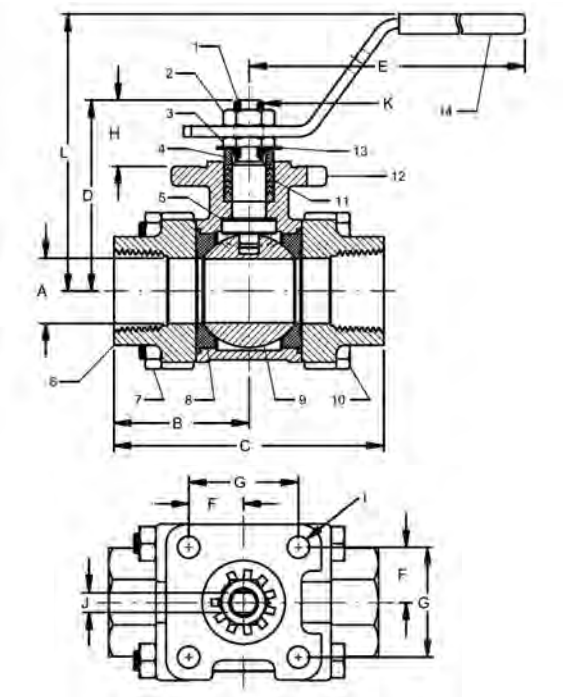

OPTIONS AVAILABLE

(MORE INFORMATION IN SECTION J)

- Minimum quantities apply
- To specify an option, replace the "01" standard suffix with the suffix of the option.
- To specify multiple options, replace the "01" suffix with the desired suffixes in the numerical order shown below. NOTE: Not all suffixes can be combined together.

(SUFFIX)	OPTION	SIZES
-01	Standard Configuration	All
-P -01-	BSPP (Parallel) Thread Connection	All
-T -01-	BSPT (Tapered) Thread Connection	All
-02-	Static Grounded	All
-04-	2-1/4" Stem Extension (Carbon Steel, Zinc Plated)	All
-08-	90° Reversed Stem	All
-14-	Vented Ball	All
-18-	Plain Yellow Grip	All
-21-	UHMWPE Seats (Non-PTFE)	All
-24-	Graphite Packing	All
-27-	Latch Lock Lever	All
-35-	PTFE Trim	All
-36-	SS Stainless Steel Locking Round Handle	All
-39-	SS Hi-Rise Locking Wheel Handle, SS Nut	All
-49-	No Lubrication. Assembled Dry	All
-57-	Oxygen Cleaned	All
-60-	Grounded Ball & Stem	All
-63-	Threaded x Socket Weld	All
-AR-	Less Handle & Stop - Add Belleville Washers	All
-WB-	With Lever & Belleville Washers	All

Pressure/Temperature Ratings - Page M-12, Graph No. 8

STANDARD MATERIAL LIST

	PART	MATERIAL
1	Stem	A276-316
2	Jam nut	SS
3	Low profile nut	316 SS
4	Gland	A276-316
5	Stem bearing	RPTFE
6	End cap (2)	ASTM A351-CF3M
7	Hex nut (4)	18-8 SS
8	Seat (2)	RPTFE
9	Ball	316 SS
10	Body bolt (4)	18-8 SS
11	Stem packing	MPTFE
12	Body	ASTM A351-CF8M
13	Lock tab washer	304 SS
14	Lever and grip	304 SS w/ Vinyl

DIMENSIONS

PART NO.	SIZE	A	B	C	D	E	F	G	H	I	J (FLATS)	K (THREADS.)UNF	L
86R-107-01	1-1/2"	1.50	2.59	5.18	3.49	8.00	0.98	1.95	1.16	0.34	.370/.372	5/8-18	4.35
86R-108-01	2"	2.00	3.01	6.03	3.95	8.06	0.98	1.95	1.16	0.34	.370/.372	5/8-18	4.85

aalberts integrated piping systems

86R-100 SERIES

STAINLESS STEEL 3-PIECE FULL PORT BALL VALVE
W/ ACTUATOR READY ISO MOUNTING PAD
3"

5 YEAR WARRANTY MADE IN USA

Full Port Threaded, 800 CWP (psig), Cold Non-Shock. 150 psig Saturated Steam.
Vacuum Service to 29 inches Hg.
MSS SP-110 Compliant.
Meets NACE MR0175 (2000) & MR0103 (2012)

FEATURES

- Multi-piece packing set
- ISO 5211 mounting pad
- Blowout-proof stem design
- In-line repairable
- Adjustable packing gland
- Investment cast components
- Reinforced seats and seals
- Full port configuration

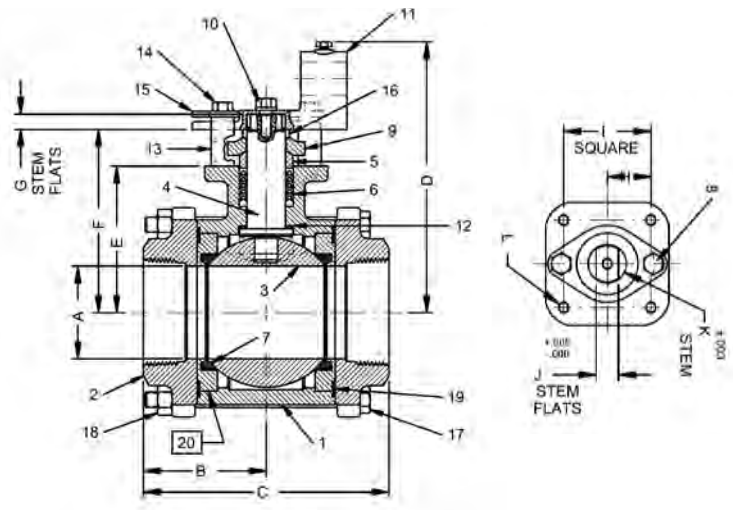

OPTIONS AVAILABLE

(MORE INFORMATION IN SECTION J)

- Minimum quantities apply
- To specify an option, replace the "01" standard suffix with the suffix of the option.
- To specify multiple options, replace the "01" suffix with the desired suffixes in the numerical order shown below. NOTE: Not all suffixes can be combined together.

(SUFFIX)	OPTION	SIZES
-01	Standard Configuration	All
-02-	Static Grounded	All
-14-	Vented Ball	All
-24-	Graphite Packing	All
-35-	PTFE Trim	All
-49-	No Lubrication. Assembled Dry	All
-57-	Oxygen Cleaned	All
-60-	Grounded Ball & Stem	All
-63-	Threaded x Socket Weld	All

Pressure/Temperature Ratings - Page M-12, Graph No. 8

STANDARD MATERIAL LIST

	PART	MATERIAL
1	Body	ASTM A351-CF8M
2	End Caps (2)	ASTM A351-CF8M
3	Ball	316 SS
4	Stem	A276-316
5	Packing Gland	316 SS
6	Stem Seal	MPTFE
7	Seats (2)	RPTFE
8	Gland Screws (2)	Stainless Steel
9	Gland Plate	Stainless Steel
10	Adapter Screw	Stainless Steel
11	Handle Adapter	Stainless Steel
12	Stem Bearing	RPTFE
13	Stops (2)	Stainless Steel
14	Stop Screws (2)	Stainless Steel
15	Lock Plate	Stainless Steel
16	Grounding Spring	Stainless Steel
17	Body Bolts (6)	Stainless Steel
18	Heavy Hex Nuts (6)	Stainless Steel
19	Body Seals (2)	RPTFE
20	Seat Holders (2)	Stainless Steel
21	Pipe Handle	(not shown)

DIMENSIONS

PART NO.	SIZE	A	B	C	D	E	F	G	H	I	J (FLATS)	K	L (THREADS.)UNF
86R-100-01	3"	3.00	4.00	8.00	8.80	4.75	5.94	0.50	1.420	2.840	0.725	1.250	3/8-16

86R-200 SERIES

STAINLESS STEEL 3-PIECE FULL PORT SOCKET WELD BALL VALVE
W/ ACTUATOR READY ISO MOUNTING PAD
1-1/2" & 2"

5 YEAR WARRANTY MADE IN USA

Socket Weld, 800 CWP (psig), Cold Non-Shock. 150 psig Saturated Steam.
Vacuum Service to 29 inches Hg.
MSS SP-110 Compliant.
Meets NACE MR0175 (2000) & MR0103 (2012)

FEATURES

- Multi-piece packing set
- ISO 5211 mounting pad
- Blowout-proof stem design
- In-line repairable
- Adjustable packing gland
- Investment cast components
- Reinforced seats and seals
- Full port configuration

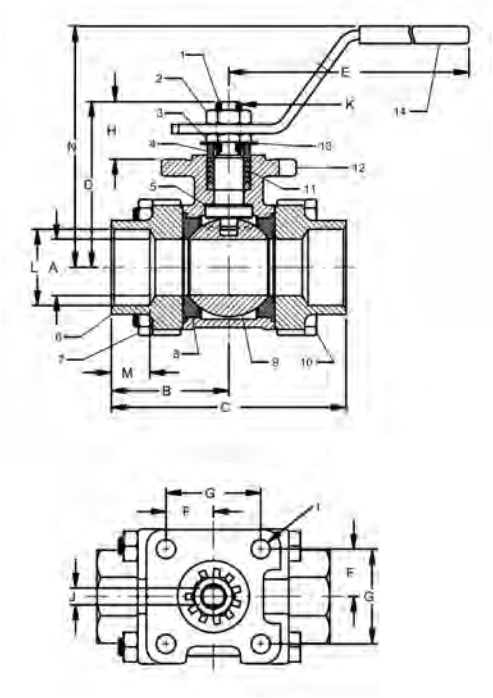

OPTIONS AVAILABLE

(MORE INFORMATION IN SECTION J)

- Minimum quantities apply
- To specify an option, replace the "01" standard suffix with the suffix of the option.
- To specify multiple options, replace the "01" suffix with the desired suffixes in the numerical order shown below. NOTE: Not all suffixes can be combined together.

(SUFFIX)	OPTION	SIZES
-01	Standard Configuration	All
-02-	Static Grounded	All
-04-	2-1/4" Stem Extension (Carbon Steel, Zinc Plated)	All
-08-	90° Reversed Stem	All
-14-	Vented Ball	All
-18-	Plain Yellow Grip	All
-21-	UHMWPE Seats (Non-PTFE)	All
-24-	Graphite Packing	All
-27-	Latch Lock Lever	All
-35-	PTFE Trim	All
-36-	SS Stainless Steel Locking Round Handle	All
-39-	SS Hi-Rise Locking Wheel Handle, SS Nut	All
-49-	No Lubrication. Assembled Dry	All
-56-	Multi-fill Seats	All
-57-	Oxygen Cleaned	All
-60-	Grounded Ball & Stem	All
-AR-	Less Handle & Stop - Add Belleville Washers	All
-WB-	With Lever & Belleville Washers	All

Pressure/Temperature Ratings - Page M-12, Graph No. 8

STANDARD MATERIAL LIST

	PART	MATERIAL
1	Stem	A276-316
2	Jam nut	SS
3	Low profile nut	316 SS
4	Gland	A276-316
5	Stem bearing	RPTFE
6	End cap (2)	ASTM A351-CF3M
7	Hex nut (4)	18-8 SS
8	Seat (2)	RPTFE
9	Ball	316 SS
10	Body bolt (4)	18-8 SS
11	Stem packing	MPTFE
12	Body	ASTM A351-CF8M
13	Lock tab washer	304 SS
14	Lever and grip	304 SS w/ Vinyl

DIMENSIONS

PART NO.	SIZE	A	B	C	D	E	F	G	H	I	J (FLATS)	K (THREADS.)UNF	L	M	N
86R-207-01	1-1/2"	1.50	2.59	5.18	3.49	8.06	0.98	1.95	1.16	0.34	.370/.372	5/8-18	1.915	0.87	4.38
86R-208-01	2"	2.00	3.01	6.03	3.95	8.06	0.98	1.95	1.16	0.34	.370/.372	5/8-18	2.405	1.05	4.85

aalberts integrated piping systems

86R-200 SERIES

STAINLESS STEEL 3-PIECE FULL PORT SOCKET WELD BALL VALVE
W/ ACTUATOR READY ISO MOUNTING PAD
3"

Socket Weld, 800 CWP (psig), Cold Non-Shock. 150 psig Saturated Steam.
Vacuum Service to 29 inches Hg.
MSS SP-110 Compliant.
Meets NACE MR0175 (2000) & MR0103 (2012)

FEATURES

- Multi-piece packing set
- ISO 5211 mounting pad
- Blowout-proof stem design
- In-line repairable
- Adjustable packing gland
- Investment cast components
- Reinforced seats and seals
- Full port configuration

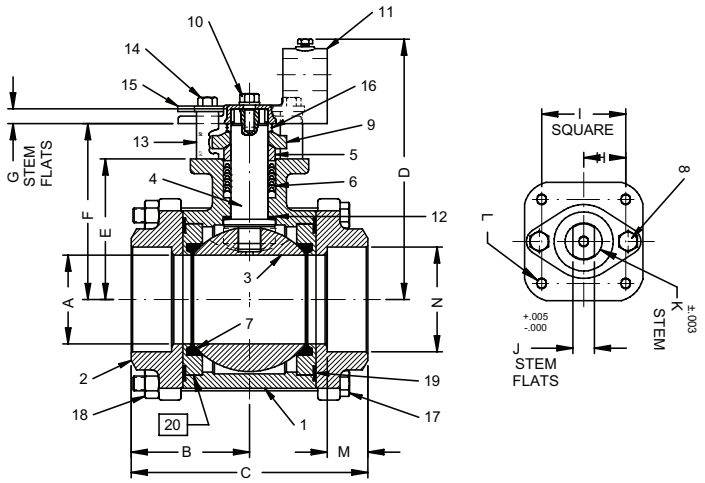

OPTIONS AVAILABLE

(MORE INFORMATION IN SECTION J)

- Minimum quantities apply
- To specify an option, replace the "01" standard suffix with the suffix of the option.
- To specify multiple options, replace the "01" suffix with the desired suffixes in the numerical order shown below. NOTE: Not all suffixes can be combined together.

(SUFFIX)	OPTION	SIZES
-01	Standard Configuration	All
-02-	Static Grounded	All
-14-	Vented Ball	All
-24-	Graphite Packing	All
-35-	PTFE Trim	All
-49-	No Lubrication. Assembled Dry	All
-57-	Oxygen Cleaned	All
-60-	Grounded Ball & Stem	All
-70-	4" Extended Bonnet	All

Pressure/Temperature Ratings - Page M-12, Graph No. 8

STANDARD MATERIAL LIST

	PART	MATERIAL
1	Body	ASTM A351-CF8M
2	End Caps (2)	ASTM A351-CF8M
3	Ball	316 SS
4	Stem	A276-316
5	Packing Gland	316 SS
6	Stem Seal	MPTFE
7	Seats (2)	RPTFE
8	Gland Screws (2)	Stainless Steel
9	Gland Plate	Stainless Steel
10	Adapter Screw	Stainless Steel
11	Handle Adapter	Stainless Steel
12	Stem Bearing	RPTFE
13	Stops (2)	Stainless Steel
14	Stop Screws (2)	Stainless Steel
15	Lock Plate	Stainless Steel
16	Grounding Spring	Stainless Steel
17	Body Bolts (6)	Stainless Steel
18	Heavy Hex Nuts (6)	Stainless Steel
19	Body Seals (2)	RPTFE
20	Seat Holders (2)	Stainless Steel
21	Pipe Handle	(not shown)

DIMENSIONS

PART NO.	SIZE	A	B	C	D	E	F	G	H	I	J (FLATS)	K	L (THREADS.)UNF	M	N
86R-200-01	3"	3.00	4.00	8.00	8.80	4.75	5.94	0.50	1.420	2.840	0.725	1.250	3/8-16	1.37	3.54

86R-700 SERIES

STAINLESS STEEL 3-PIECE FULL PORT BUTT WELD BALL VALVE
W/ ACTUATOR READY ISO MOUNTING PAD
1-1/2" & 2"

5 YEAR WARRANTY MADE IN USA

Schedule 10 Butt-Weld Ends, 800 CWP (psig), Cold Non-Shock. 150 psig Saturated Steam.
Vacuum Service to 29 inches Hg.
MSS SP-72 compliant.
Meets NACE MR0175 (2000) & MR0103 (2012)

FEATURES

- Multi-piece packing set
- ISO 5211 mounting pad
- Blowout-proof stem design
- In-line repairable
- Adjustable packing gland
- Investment cast components
- Reinforced seats and seals
- Full port configuration

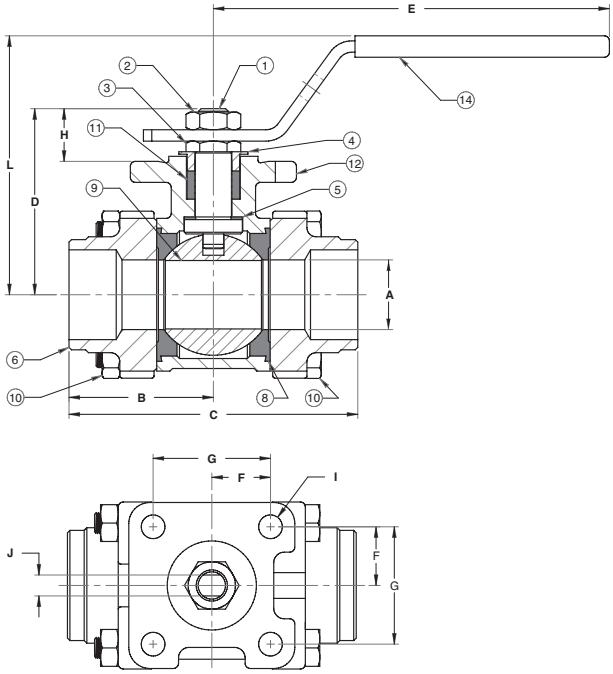

OPTIONS AVAILABLE

(MORE INFORMATION IN SECTION J)

- Minimum quantities apply
- To specify an option, replace the "01" standard suffix with the suffix of the option.
- To specify multiple options, replace the "01" suffix with the desired suffixes in the numerical order shown below. NOTE: Not all suffixes can be combined together.

(SUFFIX)	OPTION	SIZES
-01	Standard Configuration	All
-02-	Static Grounded	All
-04-	2-1/4" Stem Extension (Carbon Steel, Zinc Plated)	All
-08-	90° Reversed Stem	All
-14-	Vented Ball	All
-18-	Plain Yellow Grip	All
-21-	UHMWPE Seats (Non-PTFE)	All
-24-	Graphite Packing	All
-27-	Latch Lock Lever	All
-35-	PTFE Trim	All
-36-	SS Stainless Steel Locking Round Handle	All
-39-	SS Hi-Rise Locking Wheel Handle, SS Nut	All
-49-	No Lubrication. Assembled Dry	All
-57-	Oxygen Cleaned	All
-60-	Grounded Ball & Stem	All
-AR-	Less Handle & Stop - Add Belleville Washers	All
-WB-	With Lever & Belleville Washers	All

Pressure/Temperature Ratings - Page M-12, Graph No. 8

STANDARD MATERIAL LIST

	PART	MATERIAL
1	Stem	A276-316
2	Jam nut	Stainless Steel
3	Low profile nut	316 SS
4	Gland	A276-316
5	Stem bearing	RPTFE
6	End cap (2)	ASTM A351-CF3M
7	Hex nut (4)	18-8 SS
8	Seat (2)	RPTFE
9	Ball	316 SS
10	Body bolt (4)	18-8 SS
11	Stem packing	MPTFE
12	Body	ASTM A351-CF8M
13	Lock tab washer	304 SS
14	Lever and grip	304 SS w/ Vinyl

DIMENSIONS

PART NO.	SIZE	A	B	C	D	E	F	G	H	I	J (FLATS)	K (THREADS.)UNF	L
86R-707-01	1-1/2"	1.50	2.59	5.18	3.49	8.06	0.98	1.95	1.16	0.34	.370/.372	5/8-18	4.38
86R-708-01	2"	2.00	3.01	6.03	3.95	8.06	0.98	1.95	1.16	0.34	.370/.372	5/8-18	4.85

aalberts integrated piping systems

86S-100 SERIES

STAINLESS STEEL 3-PIECE FULL PORT
CLASS 600 NPT BALL VALVE

5 YEAR WARRANTY MADE IN USA

STANDARD COMPLIANCE

- Valve Design: ASME B16.34, Class 600, NACE MR0175 (2000) & MR0103 (2012), API 608
- End Connections: NPT per ASME B1.20.1
- Valve Marking: ASME B16.3
- Production Testing: ASME B16.34

FEATURES

- 3-piece construction w/ enclosed fasteners
- Full port
- Stainless steel trim & hardware
- Swing-out center section
- Pressure balanced solid ball
- Compression controlled spiral wound gaskets
- Anti-blowout one piece bottom entry stem
- Statically grounded ball, stem, & body
- Two-position locking
- Adjustable multi-piece PTFE "V" style packing
- Fully machined ISO 5211 mounting
- Cast bosses on the center-section and end caps for bleed & drain ports
- Vacuum service to 29 in of Hg.
- CE Marking, 1-1/4" and larger (add "-CE" suffix)
- 250 psig saturated steam

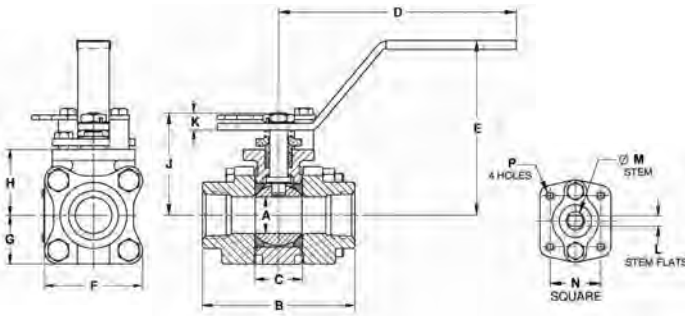

OPTIONS AVAILABLE

(MORE INFORMATION IN SECTION J)

- Minimum quantities apply
- To specify an option, replace the "01" standard suffix with the suffix of the option.
- To specify multiple options, replace the "01" suffix with the desired suffixes in the numerical order shown below. NOTE: Not all suffixes can be combined together.

(SUFFIX)	OPTION	SIZES
-01	Standard Configuration	All
-P -01-	BSPP (Parallel) Thread Connection	All
-T -01-	BSPT (Tapered) Thread Connection	All
-04-	2-1/4" Stem Extension (Carbon Steel, Zinc Plated)	All
-14-	Vented Ball	All
-15-	Stainless Steel Locking Round Handle	All
-21-	UHMWPE Seats w/ Graphite Seals	All
-24-	Graphite Packing, Spiral Wound Graphite Body Seal, PTFE/PEEK Bearing (Fire Safe API 607, 6th Edition, ISO 10497:2010)	All
-38-	Peek Seats, Graphite Stem Packing & Gaskets	All
-49-	No Lubrication. Assembled Dry	All
-57-	Cleaned for Oxygen Service	All
-62-	Center Section Only	All
-63-	NPT x Socketweld	All
-69-	Drilled & Tapped Purge & Drains	All
-70-	4" Extended Bonnet	All
-76-	Live Loaded (Lever Operated)	All
-77-	Live Loaded (Actuated)	All
-90-	Double Packed 4" Extended Bonnet	All
-9P-	Double Packed 4" Extended Bonnet w/ Monitoring Port	All
-CE-	CE Marking	1-1/4" to 2"
-EF-	Graphite Packing (API 641 Compliant)	3/4" to 2"
-KF-	PCTFE Stem Bearing	All
-SR-	Spring Return Handle	1/4" to 1"
-ZP1-	Fugitive Emissions Packing (Viton)	All
-ZP2-	Fugitive Emissions Packing (Buna-N)	All
-ZP3-	Fugitive Emissions Packing (Kalrez)	All

Pressure/Temperature Ratings - Page M-31, Graph No. 46

STANDARD MATERIAL LIST

	PART	MATERIAL
1	Body	ASTM A351-CF3
2	End Caps	ASTM A351-CF3
3	Ball	ASTM A276-304/304L
4	Stem	ASTM A276-304/304L ASTM A564 17-4PH (2" with -38 suffix)
5	Seat	Multi-Seal
6	Packing	PTFE
7	Stem Bearing	PEEK/PTFE
8	Body Gasket	PTFE Spiral Wound
9	Body Bolts	ASTM A193-Gr.B8M3
10	Body Nuts	ASTM A194-Gr.8
11	Stop Bolts	18-8 Stainless Steel
12	Gland Bolts	ASTM A193-Gr.B8
13	Handle Nut/Screw	300 Series Stainless Steel
14	Packing Gland	ASTM A276-316SS
15	Gland Plate	300 Series Stainless Steel
16	Lever Handle	300 Series Stainless Steel
17	Lock Plate	300 Series Stainless Steel
18	Stops	300 Series Stainless Steel
19	Internal Grounding Spring	300 Series Stainless Steel
20	External Grounding Spring	300 Series Stainless Steel

DIMENSIONS

PART NO.	SIZE	A	B	C	D	E	F	G	H	J	K	L	M	N	P	WT.
86S-101-01	1/4"	0.37	2.80	0.89	5.12	3.02	2.02	1.01	1.39	1.97	0.23	0.245	0.375	1.00	10-24	2.3
86S-102-01	3/8	0.50	2.80	0.89	5.12	3.02	2.02	1.01	1.39	1.97	0.23	0.245	0.375	1.00	10-24	2.3
86S-103-01	1/2"	0.50	2.80	0.89	5.12	3.02	2.02	1.01	1.39	1.97	0.23	0.245	0.375	1.00	10-24	2.3
86S-104-01	3/4"	0.75	3.68	1.10	5.53	3.40	2.40	1.20	1.65	2.35	0.24	0.312	0.500	1.392	1/4-20	4.0
86S-105-01	1"	1.00	4.19	1.31	6.53	4.80	2.67	1.34	1.80	2.80	0.48	0.287	0.500	1.392	1/4-20	5.7
86S-106-01	1-1/4"	1.50	4.50	1.97	6.65	4.70	3.84	1.92	2.49	3.89	0.72	0.412	0.625	1.949	5/16-18	14.2
86S-107-01	1-1/2"	1.50	4.98	1.97	6.65	4.70	3.84	1.92	2.49	3.89	0.72	0.412	0.625	1.949	5/16-18	14.4
86S-108-01	2"	2.00	5.86	2.56	8.40	5.47	4.56	2.46	3.17	4.74	0.80	0.477	0.750	1.949	5/16-18	24.4

REV. 17SEP19

86S-200 SERIES

STAINLESS STEEL 3-PIECE FULL PORT
CLASS 600 SOCKET WELD BALL VALVE

5 YEAR WARRANTY MADE IN USA

STANDARD COMPLIANCE

- Valve Design: ASME B16.34, Class 600, NACE MR0175 (2000) & MR0103 (2012), API 608
- End Connections: Socket-weld per ASME B16.11
- Valve Marking: ASME B16.34
- Production Testing: ASME B16.34

FEATURES

- 3-piece construction w/ enclosed fasteners
- Full port
- Stainless steel trim & hardware
- Swing-out center section
- Pressure balanced solid ball
- Compression controlled spiral wound gaskets
- Anti-blowout one piece bottom entry stem
- Statically grounded ball, stem, & body
- Two-position locking
- Adjustable multi-piece PTFE "V" style packing
- Fully machined ISO 5211 mounting
- Cast bosses on the center-section and end caps for bleed & drain ports
- Vacuum service to 29 in of Hg.
- CE Marking, 1-1/4" and larger (add "-CE" suffix)
- 250 psig saturated steam

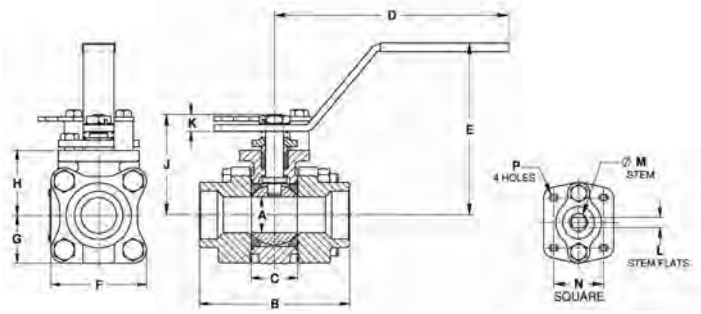

STANDARD MATERIAL LIST

	PART	MATERIAL
1	Body	ASTM A351-CF3
2	End Caps	ASTM A351-CF3
3	Ball	ASTM A276-304/304L
4	Stem	ASTM A276-304/304L ASTM A564 17-4PH (2" with -38 suffix)
5	Seat	Multi-Seal
6	Packing	PTFE
7	Stem Bearing	PEEK/PTFE
8	Body Gasket	PTFE Spiral Wound
9	Body Bolts	ASTM A193-Gr.B8M3
10	Body Nuts	ASTM A194-Gr.8
11	Stop Bolts	18-8 Stainless Steel
12	Gland Bolts	ASTM A193-Gr.B8
13	Handle Nut/Screw	300 Series Stainless Steel
14	Packing Gland	ASTM A276-316SS
15	Gland Plate	300 Series Stainless Steel
16	Lever Handle	300 Series Stainless Steel
17	Lock Plate	300 Series Stainless Steel
18	Stops	300 Series Stainless Steel
19	Internal Grounding Spring	300 Series Stainless Steel
20	External Grounding Spring	300 Series Stainless Steel

OPTIONS AVAILABLE

(MORE INFORMATION IN SECTION J)

- Minimum quantities apply
- To specify an option, replace the "01" standard suffix with the suffix of the option.
- To specify multiple options, replace the "01" suffix with the desired suffixes in the numerical order shown below. NOTE: Not all suffixes can be combined together.

(SUFFIX)	OPTION	SIZES
-01	Standard Configuration	All
-04-	2-1/4" Stem Extension (Carbon Steel, Zinc Plated)	All
-14-	Vented Ball	All
-15-	Stainless Steel Locking Round Handle	All
-21-	UHMWPE Seats w/ Graphite Seals	All
-24-	Graphite Packing, Spiral Wound Graphite Body Seal, PTFE/PEEK Bearing (Fire Safe API 607, 6th Edition, ISO 10497:2010)	All
-38-	Peek Seats, Graphite Stem Packing & Gaskets	All
-49-	No Lubrication. Assembled Dry	All
-57-	Cleaned for Oxygen Service	All
-62-	Center Section Only	All
-69-	Drilled & Tapped Purge & Drains	All
-70-	4" Extended Bonnet	All
-76-	Live Loaded (Lever Operated)	All
-77-	Live Loaded (Actuated)	All
-90-	Double Packed 4" Extended Bonnet	All
-9P-	Double Packed 4" Extended Bonnet w/ Monitoring Port	All
-CE-	CE Marking	1-1/4" to 2"
-EF-	Graphite Packing (API 641 Compliant)	3/4" to 2"
-KF-	PCTFE Stem Bearing	All
-SR-	Spring Return Handle	1/4" to 1"
-ZP1-	Fugitive Emissions Packing (Viton)	All
-ZP2-	Fugitive Emissions Packing (Buna-N)	All
-ZP3-	Fugitive Emissions Packing (Kalrez)	All

Pressure/Temperature Ratings - Page M-31, Graph No. 46

DIMENSIONS

PART NO.	SIZE	A	B	C	D	E	F	G	H	J	K	L	M	N	P	WT.
86S-201-01	1/4"	0.37	2.80	0.89	5.12	3.02	2.02	1.01	1.39	1.97	0.23	0.245	0.375	1.00	10-24	2.3
86S-202-01	3/8"	0.50	2.80	0.89	5.12	3.02	2.02	1.01	1.39	1.97	0.23	0.245	0.375	1.00	10-24	2.3
86S-203-01	1/2"	0.50	2.80	0.89	5.12	3.02	2.02	1.01	1.39	1.97	0.23	0.245	0.375	1.00	10-24	2.3
86S-204-01	3/4"	0.75	3.68	1.10	5.53	3.40	2.40	1.20	1.65	2.35	0.24	0.312	0.500	1.392	1/4-20	4.0
86S-205-01	1"	1.00	4.19	1.31	6.53	4.80	2.67	1.34	1.80	2.80	0.48	0.287	0.500	1.392	1/4-20	5.7
86S-206-01	1-1/4"	1.50	4.50	1.97	6.65	4.70	3.84	1.92	2.49	3.89	0.72	0.412	0.625	1.949	5/16-18	14.2
86S-207-01	1-1/2"	1.50	4.98	1.97	6.65	4.70	3.84	1.92	2.49	3.89	0.72	0.412	0.625	1.949	5/16-18	14.4
86S-208-01	2"	2.00	5.86	2.56	8.40	5.47	4.56	2.46	3.17	4.74	0.80	0.477	0.750	1.949	5/16-18	24.4

REV. 17SEP19

aalberts integrated piping systems

86S-500 SERIES

STAINLESS STEEL 3-PIECE FULL PORT
CLASS 600 SCH. 40 BUTT WELD BALL VALVE

5 YEAR WARRANTY MADE IN USA

STANDARD COMPLIANCE

- Valve Design: ASME B16.34, Class 600, NACE MR0175 (2000) & MR0103 (2012), API 608
- End Connections: Butt-Weld per ASME B16.25
- Valve Marking: ASME B16.34
- Production Testing: ASME B16.34

FEATURES

- 3-piece construction w/ enclosed fasteners
- Full port
- Stainless steel trim & hardware
- Swing-out center section
- Pressure balanced solid ball
- Compression controlled spiral wound gaskets
- Anti-blowout one piece bottom entry stem
- Statically grounded ball, stem, & body
- Two-position locking
- Adjustable multi-piece PTFE "V" style packing
- Fully machined ISO 5211 mounting
- Cast bosses on the center-section and end caps for bleed & drain ports
- Vacuum service to 29 in of Hg.
- CE Marking, 1-1/2" and larger (add "-CE" suffix)
- 250 psig saturated steam

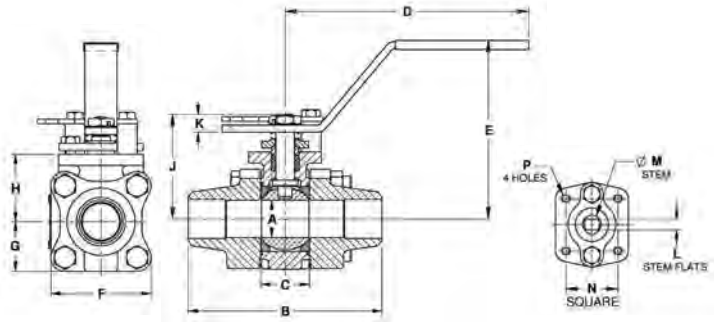

STANDARD MATERIAL LIST

	PART	MATERIAL
1	Body	ASTM A351-CF3
2	End Caps	ASTM A351-CF3
3	Ball	ASTM A276-304/304L
4	Stem	ASTM A276-304/304L ASTM A564 17-4PH (2" with -38 suffix)
5	Seat	Multi-Seal
6	Packing	PTFE
7	Stem Bearing	PEEK/PTFE
8	Body Gasket	PTFE Spiral Wound
9	Body Bolts	ASTM A193-Gr.B8M3
10	Body Nuts	ASTM A194-Gr.8
11	Stop Bolts	18-8 Stainless Steel
12	Gland Bolts	ASTM A193-Gr.B8
13	Handle Nut/Screw	300 Series Stainless Steel
14	Packing Gland	ASTM A276-316SS
15	Gland Plate	300 Series Stainless Steel
16	Lever Handle	300 Series Stainless Steel
17	Lock Plate	300 Series Stainless Steel
18	Stops	300 Series Stainless Steel
19	Internal Grounding Spring	300 Series Stainless Steel
20	External Grounding Spring	300 Series Stainless Steel

OPTIONS AVAILABLE

(MORE INFORMATION IN SECTION J)

- Minimum quantities apply
- To specify an option, replace the "01" standard suffix with the suffix of the option.
- To specify multiple options, replace the "01" suffix with the desired suffixes in the numerical order shown below. NOTE: Not all suffixes can be combined together.

(SUFFIX)	OPTION	SIZES
-01	Standard Configuration	All
-04-	2-1/4" Stem Extension (Carbon Steel, Zinc Plated)	All
-14-	Vented Ball	All
-15-	Stainless Steel Locking Round Handle	All
-21-	UHMWPE Seats w/ Graphite Seals	All
-24-	Graphite Packing, Spiral Wound Graphite Body Seal, PTFE/PEEK Bearing (Fire Safe API 607, 6th Edition, ISO 10497:2010)	All
-38-	Peek Seats, Graphite Stem Packing & Gaskets	All
-49-	No Lubrication. Assembled Dry	All
-57-	Cleaned for Oxygen Service	All
-62-	Center Section Only	All
-66-	FNPT x Buttweld	All
-69-	Drilled & Tapped Purge & Drains	All
-70-	4" Extended Bonnet	All
-76-	Live Loaded (Lever Operated)	All
-77-	Live Loaded (Actuated)	All
-90-	Double Packed 4" Extended Bonnet	All
-9P-	Double Packed 4" Extended Bonnet w/ Monitoring Port	All
-CE-	CE Marking	1-1/2" to 2"
-EF-	Graphite Packing (API 641 Compliant)	3/4" to 2"
-KF-	PCTFE Stem Bearing	All
-SR-	Spring Return Handle	1/2" to 1"
-ZP1-	Fugitive Emissions Packing (Viton)	All
-ZP2-	Fugitive Emissions Packing (Buna-N)	All
-ZP3-	Fugitive Emissions Packing (Kalrez)	All

Pressure/Temperature Ratings - Page M-31, Graph No. 46

DIMENSIONS

PART NO.	SIZE	A	B	C	D	E	F	G	H	J	K	L	M	N	P	WT.
86S-503-01	1/2"	0.50	3.80	0.89	5.12	3.02	2.02	1.01	1.39	1.97	0.23	0.245	0.375	1.00	10-24	2.3
86S-504-01	3/4"	0.75	4.66	1.10	5.53	3.40	2.40	1.20	1.65	2.35	0.24	0.312	0.500	1.392	1/4-20	4.0
86S-505-01	1"	1.00	5.19	1.31	6.53	4.80	2.67	1.34	1.80	2.80	0.48	0.287	0.500	1.392	1/4-20	5.7
86S-507-01	1-1/2"	1.50	5.96	1.97	6.65	4.70	3.84	1.92	2.49	3.89	0.72	0.412	0.625	1.949	5/16-18	14.4
86S-508-01	2"	2.00	6.84	2.56	8.40	5.47	4.56	2.46	3.17	4.74	0.80	0.477	0.750	1.949	5/16-18	24.4

REV. 17SEP19

86E-100 SERIES

MONEL 3-PIECE FULL PORT
CLASS 600 NPT BALL VALVE

5 YEAR WARRANTY MADE IN USA

STANDARD COMPLIANCE

- Valve Design: ASME B16.34, Class 600, NACE MR0175 (2000) & MR0103 (2012), API 608
- End Connections: NPT per ASME B1.20.1
- Valve Marking: ASME B16.3
- Production Testing: ASME B16.34

FEATURES

- 3-piece construction w/ enclosed fasteners
- Full port
- Monel trim & hardware
- Swing-out center section
- Pressure balanced solid ball
- Compression controlled spiral wound gaskets
- Anti-blowout one piece bottom entry stem
- Statically grounded ball, stem, & body
- Two-position locking
- Adjustable multi-piece PTFE "V" style packing
- Fully machined ISO 5211 mounting
- Cast bosses on the center-section and end caps for bleed & drain ports
- Fire safe to API 607 (requires -24 suffix)
- Vacuum service to 29 in of Hg.
- CE Marking, 1-1/4" and larger (add "-CE" suffix)
- 250 psig saturated steam
- CGA 3.16-M88 (2014)

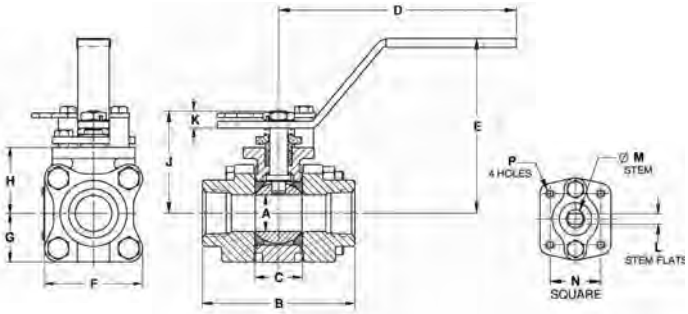

OPTIONS AVAILABLE

(MORE INFORMATION IN SECTION J)

- Minimum quantities apply
- To specify an option, replace the "01" standard suffix with the suffix of the option.
- To specify multiple options, replace the "01" suffix with the desired suffixes in the numerical order shown below. NOTE: Not all suffixes can be combined together.

(SUFFIX)	OPTION	SIZES
-01	Standard Configuration	All
-P -01-	BSPP (Parallel) Thread Connection	All
-T -01-	BSPT (Tapered) Thread Connection	All
-04-	2-1/4" Stem Extension (Carbon Steel, Zinc Plated)	All
-14-	Vented Ball	All
-15-	Stainless Steel Locking Round Handle	All
-21-	UHMWPE Seats w/ Graphite Seals	All
-24-	Graphite Packing, Spiral Wound Graphite Body Seal, PTFE/PEEK Bearing (Fire Safe API 607, 6th Edition, ISO 10497:2010)	All
-38-	Peek Seats, Graphite Stem Packing & Gaskets	All
-49-	No Lubrication. Assembled Dry	All
-57-	Cleaned for Oxygen Service	All
-62-	Center Section Only	All
-63-	NPT x Socketweld	All
-69-	Drilled & Tapped Purge & Drains	All
-70-	4" Extended Bonnet	All
-76-	Live Loaded (Lever Operated)	All
-77-	Live Loaded (Actuated)	All
-90-	Double Packed 4" Extended Bonnet	All
-9P-	Double Packed 4" Extended Bonnet w/ Monitoring Port	All
-CE-	CE Marking	1-1/4" to 2"
-EF-	Graphite Packing (API 641 Compliant)	3/4" to 2"
-EP-	Garlock EVSP Stem Packing w/ Spiral Wound Graphite Gasket (Fire Safe by Design)	All
-KF-	PCTFE Stem Bearing	All
-SR-	Spring Return Handle	1/4" to 1"
-UL-	UL Listed	All
-ZP1-	Fugitive Emissions Packing (Viton)	All
-ZP2-	Fugitive Emissions Packing (Buna-N)	All
-ZP3-	Fugitive Emissions Packing (Kalrez)	All

STANDARD MATERIAL LIST

	PART	MATERIAL
1	Body	ASTM A494-M35-1
2	End Caps	ASTM A494-M35-1
3	Ball	ASTM B164-K400
4	Stem	ASTM B164-K400
5	Seat	Multi-Seal
6	Packing	PTFE
7	Stem Bearing	PEEK/PTFE
8	Body Gasket	Mone;/PTFE Spiral Wound
9	Body Bolts	ASTM A193-Gr.B8M3
10	Body Nuts	ASTM A194-Gr.8
11	Stop Bolts	18-8 Stainless Steel
12	Gland Bolts	ASTM A193-Gr.B8
13	Handle Nut/Screw	300 Series Stainless Steel
14	Packing Gland	ASTM A276-316SS
15	Gland Plate	300 Series Stainless Steel
16	Lever Handle	300 Series Stainless Steel
17	Lock Plate	300 Series Stainless Steel
18	Stops	300 Series Stainless Steel
19	Internal Grounding Spring	Inconel X750
20	External Grounding Spring	300 Series Stainless Steel

Pressure/Temperature Ratings - Page M-33, Graph No. 50

DIMENSIONS

PART NO.	SIZE	A	B	C	D	E	F	G	H	J	K	L	M	N	P	WT.
86B-101-01	1/4"	0.37	2.80	0.89	5.12	3.02	2.02	1.01	1.39	1.97	0.23	0.245	0.375	1.00	10-24	2.3
86B-102-01	3/8	0.50	2.80	0.89	5.12	3.02	2.02	1.01	1.39	1.97	0.23	0.245	0.375	1.00	10-24	2.3
86B-103-01	1/2"	0.50	2.80	0.89	5.12	3.02	2.02	1.01	1.39	1.97	0.23	0.245	0.375	1.00	10-24	2.3
86B-104-01	3/4"	0.75	3.68	1.10	5.53	3.40	2.40	1.20	1.65	2.35	0.24	0.312	0.500	1.392	1/4-20	4.0
86B-105-01	1"	1.00	4.19	1.31	6.53	4.80	2.67	1.34	1.80	2.80	0.48	0.287	0.500	1.392	1/4-20	5.7
86B-106-01	1-1/4"	1.50	4.50	1.97	6.65	4.70	3.84	1.92	2.49	3.89	0.72	0.412	0.625	1.949	5/16-18	14.2
86B-107-01	1-1/2"	1.50	4.98	1.97	6.65	4.70	3.84	1.92	2.49	3.89	0.72	0.412	0.625	1.949	5/16-18	14.4
86B-108-01	2"	2.00	5.86	2.56	8.40	5.47	4.56	2.46	3.17	4.74	0.80	0.477	0.750	1.949	5/16-18	24.4

REV. 17SEP19

aalberts integrated piping systems

86E-200 SERIES

MONEL 3-PIECE FULL PORT
CLASS 600 SOCKET WELD BALL VALVE

5 YEAR WARRANTY MADE IN USA

STANDARD COMPLIANCE

- Valve Design: ASME B16.34, Class 600, NACE MR0175 (2000) & MR0103 (2012), API 608
- End Connections: Socket-weld per ASME B16.11
- Valve Marking: ASME B16.34
- Production Testing: ASME B16.34

FEATURES

- 3-piece construction w/ enclosed fasteners
- Full port
- Monel trim & hardware
- Swing-out center section
- Pressure balanced solid ball
- Compression controlled spiral wound gaskets
- Anti-blowout one piece bottom entry stem
- Statically grounded ball, stem, & body
- Two-position locking
- Adjustable multi-piece PTFE "V" style packing
- Fully machined ISO 5211 mounting
- Cast bosses on the center-section and end caps for bleed & drain ports
- Fire safe to API 607 (requires -24 suffix)
- Vacuum service to 29 in of Hg.
- CE Marking, 1-1/4" and larger (add "-CE" suffix)
- 250 psig saturated steam
- CGA 3.16-M88 (2014)

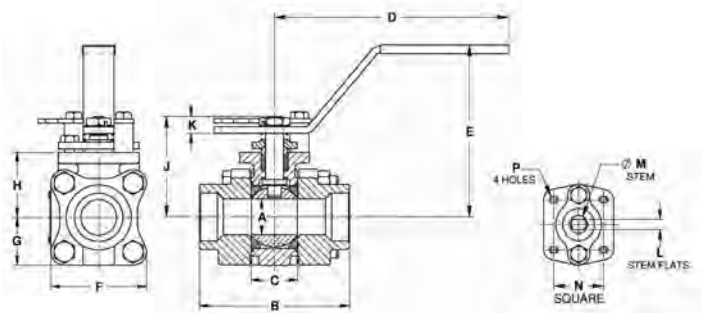

STANDARD MATERIAL LIST

	PART	MATERIAL
1	Body	ASTM A494-M35-1
2	End Caps	ASTM A494-M35-1
3	Ball	ASTM B164-K400
4	Stem	ASTM B164-K400
5	Seat	Multi-Seal
6	Packing	PTFE
7	Stem Bearing	PEEK/PTFE
8	Body Gasket	Mone;/PTFE Spiral Wound
9	Body Bolts	ASTM A193-Gr.B8M3
10	Body Nuts	ASTM A194-Gr.8
11	Stop Bolts	18-8 Stainless Steel
12	Gland Bolts	ASTM A193-Gr.B8
13	Handle Nut/Screw	300 Series Stainless Steel
14	Packing Gland	ASTM A276-316SS
15	Gland Plate	300 Series Stainless Steel
16	Lever Handle	300 Series Stainless Steel
17	Lock Plate	300 Series Stainless Steel
18	Stops	300 Series Stainless Steel
19	Internal Grounding Spring	Inconel X750
20	External Grounding Spring	300 Series Stainless Steel

OPTIONS AVAILABLE

(MORE INFORMATION IN SECTION J)

- Minimum quantities apply
- To specify an option, replace the "01" standard suffix with the suffix of the option.
- To specify multiple options, replace the "01" suffix with the desired suffixes in the numerical order shown below. NOTE: Not all suffixes can be combined together.

(SUFFIX)	OPTION	SIZES
-01	Standard Configuration	All
-04-	2-1/4" Stem Extension (Carbon Steel, Zinc Plated)	All
-14-	Vented Ball	All
-15-	Stainless Steel Locking Round Handle	All
-21-	UHMWPE Seats w/ Graphite Seals	All
-24-	Graphite Packing, Spiral Wound Graphite Body Seal, PTFE/PEEK Bearing (Fire Safe API 607, 6th Edition, ISO 10497:2010)	All
-38-	Peek Seats, Graphite Stem Packing & Gaskets	All
-49-	No Lubrication. Assembled Dry	All
-57-	Cleaned for Oxygen Service	All
-62-	Center Section Only	All
-69-	Drilled & Tapped Purge & Drains	All
-70-	4" Extended Bonnet	All
-76-	Live Loaded (Lever Operated)	All
-77-	Live Loaded (Actuated)	All
-90-	Double Packed 4" Extended Bonnet	All
-9P-	Double Packed 4" Extended Bonnet w/ Monitoring Port	All
-CE-	CE Marking	1-1/4" to 2"
-EF-	Graphite Packing (API 641 Compliant)	3/4" to 2"
-EP-	Garlock EVSP Stem Packing w/ Spiral Wound Graphite Gasket (Fire Safe by Design)	All
-KF-	PCTFE Stem Bearing	All
-SR-	Spring Return Handle	1/4" to 1"
-UL-	UL Listed	All
-ZP1-	Fugitive Emissions Packing (Viton)	All
-ZP2-	Fugitive Emissions Packing (Buna-N)	All
-ZP3-	Fugitive Emissions Packing (Kalrez)	All

Pressure/Temperature Ratings - Page M-33, Graph No. 50

DIMENSIONS

PART NO.	SIZE	A	B	C	D	E	F	G	H	J	K	L	M	N	P	WT.
86B-201-01	1/4"	0.37	2.80	0.89	5.12	3.02	2.02	1.01	1.39	1.97	0.23	0.245	0.375	1.00	10-24	2.3
86B-202-01	3/8"	0.50	2.80	0.89	5.12	3.02	2.02	1.01	1.39	1.97	0.23	0.245	0.375	1.00	10-24	2.3
86B-203-01	1/2"	0.50	2.80	0.89	5.12	3.02	2.02	1.01	1.39	1.97	0.23	0.245	0.375	1.00	10-24	2.3
86B-204-01	3/4"	0.75	3.68	1.10	5.53	3.40	2.40	1.20	1.65	2.35	0.24	0.312	0.500	1.392	1/4-20	4.0
86B-205-01	1"	1.00	4.19	1.31	6.53	4.80	2.67	1.34	1.80	2.80	0.48	0.287	0.500	1.392	1/4-20	5.7
86B-206-01	1-1/4"	1.50	4.50	1.97	6.65	4.70	3.84	1.92	2.49	3.89	0.72	0.412	0.625	1.949	5/16-18	14.2
86B-207-01	1-1/2"	1.50	4.98	1.97	6.65	4.70	3.84	1.92	2.49	3.89	0.72	0.412	0.625	1.949	5/16-18	14.4
86B-208-01	2"	2.00	5.86	2.56	8.40	5.47	4.56	2.46	3.17	4.74	0.80	0.477	0.750	1.949	5/16-18	24.4

REV. 17SEP19

SECTION B

REVISIONS

PAGE	DATE	DESCRIPTION
B7 THRU B62		Added "-EF" (Graphite Packing (API 641 Compliant)) suffix option Added "-ZP1" (Fugitive Emissions Packing (Viton)) suffix option Added "-ZP2" Fugitive Emissions Packing (Buna-N)) suffix option Added "-ZP3" Fugitive Emissions Packing (Kalrez)) suffix option
B7 THRU B12	18JUL19	Added "-UA" (AIS (American Iron & Steel) Compliant) suffix option
	12APR16	Added suffix "-KF". PCTFE stem bearing.
B13 THRU B18	18JUL19	Added "-UA" (AIS (American Iron & Steel) Compliant) suffix option
B13 THRU B24	07APR17	CE Marking now requires "-CE" suffix.
	12APR16	Added suffix "-KF". PCTFE stem bearing.
B25 THRU B30	18JUL19	Added "-UA" (AIS (American Iron & Steel) Compliant) suffix option
	12APR16	Added suffix "-KF". PCTFE stem bearing.
B31 THRU B36	18JUL19	Added "-UA" (AIS (American Iron & Steel) Compliant) suffix option
B31 THRU B62	07APR17	CE Marking now requires "-CE" suffix.
	12APR16	Added suffix "-KF". PCTFE stem bearing.
B73 THRU B77	17SEP19	Added "-EF" (Graphite Packing (API 641 Compliant)) suffix option Added "-ZP1" (Fugitive Emissions Packing (Viton)) suffix option Added "-ZP2" Fugitive Emissions Packing (Buna-N)) suffix option Added "-ZP3" Fugitive Emissions Packing (Kalrez)) suffix option
B-76 THRU B-77	30JUL19	Added 86E-100 and 86E-200

"Apollo" Valves | INDUSTRIAL PRODUCTS

Uni-Body Ball Valves

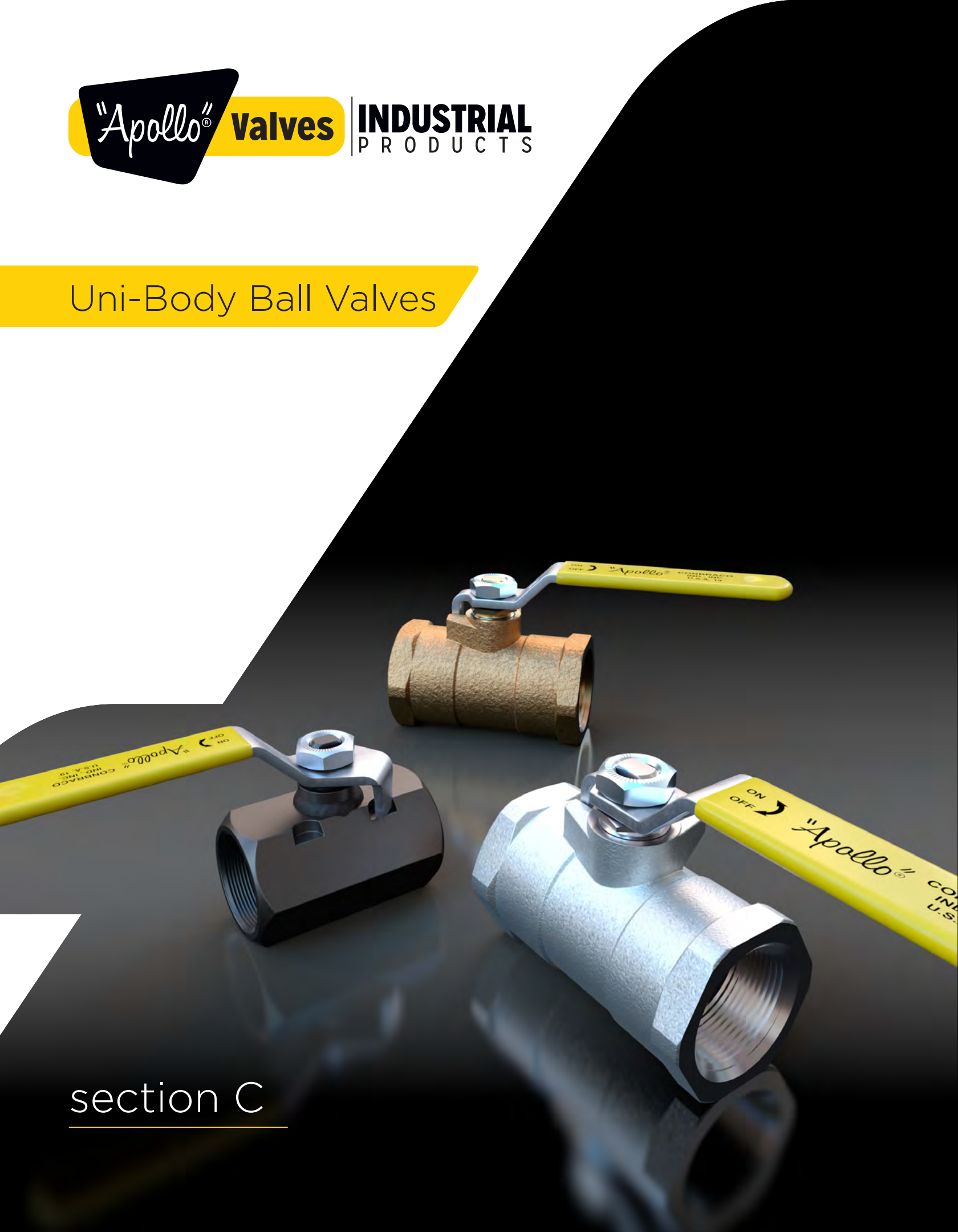

section C

SECTION C

UNI-BODY BALL VALVES

SERIES	DESCRIPTION	PAGE
BRONZE		
9A-100 SERIES	Threaded Heavy Pattern Bronze. 600 CWP (psig)	C-3
90-100 SERIES	Threaded Bronze. UL Listed. 400 CWP (psig)	C-4
CARBON STEEL		
92-100 SERIES	Threaded Carbon Steel. Cast ASTM A21 grade WCB body	C-5
93-100 SERIES	Threaded Carbon Steel. ASTM A108 barstock body	C-6
STAINLESS STEEL		
96-100 SERIES	Threaded Stainless Steel	C-7
DUPLEX STAINLESS STEEL		
96J-100 SERIES	Threaded Stainless Steel	C-8
SUPER DUPLEX STAINLESS STEEL		
96K-100 SERIES	Threaded Stainless Steel	C-9

9A-100 SERIES

BRONZE UNI-BODY HEAVY PATTERN BALL VALVE

Female NPT Thread, 600 CWP (psig), Cold Non-Shock.
150 psig Saturated Steam.
MSS SP-110 Compliant.

FEATURES

- Static grounding devices
- Blowout-proof stem design
- Reinforced seats and seals
- Adjustable packing gland
- One piece bronze body
- Compact

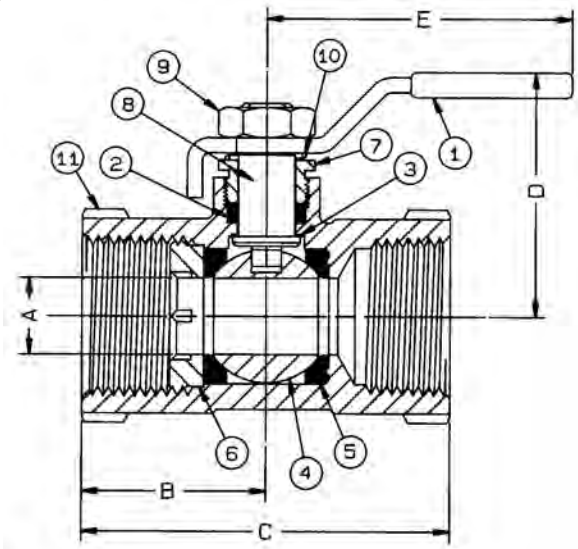

STANDARD MATERIAL LIST

	PART	MATERIAL
1	Lever and grip	Steel, zinc plated w/vinyl
2	Stem packing	MPTFE
3	Stem bearing	RPTFE
4	Ball	B16 Brass, chrome plated
5	Seat (2)	RPTFE
6	Retainer	B16 Brass
7	Gland nut	B16 Brass
8	Stem	B16 Brass
9	Lever nut (Screw 1/4" to 1/2")	Steel, zinc plated
10	Ground spring	SS
11	Body	B584-C84400

DIMENSIONS

PART NO.	SIZE	A	B	C	D	E	WT.
9A-101-01	1/4"	0.37	1.34	2.59	1.64	3.87	0.73
9A-102-01	3/8"	0.37	1.34	2.59	1.64	3.87	0.73
9A-103-01	1/2"	0.37	1.34	2.59	1.64	3.87	0.73
9A-104-01	3/4"	0.50	1.44	2.84	1.78	3.87	1.10
9A-105-01	1"	0.63	1.72	3.28	2.02	4.78	1.73
9A-106-01	1-1/4"	0.82	1.94	3.84	2.27	4.78	2.92
9A-107-01	1-1/2"	1.00	2.06	4.00	2.70	5.43	3.96
9A-108-01	2"	1.25	2.29	4.56	2.92	5.43	5.97

VARIATIONS AVAILABLE

- 9A-140 Series(316 SS Ball & Stem)

OPTIONS AVAILABLE

(MORE INFORMATION IN SECTION J)

- Minimum quantities apply
- To specify an option, replace the "01" standard suffix with the suffix of the option.
- To specify multiple options, replace the "01" suffix with the desired suffixes in the numerical order shown below. NOTE: Not all suffixes can be combined together.

(SUFFIX)	OPTION	SIZES
-01	Standard Configuration	All
-P -01-	BSPP (Parallel) Thread Connection	1/4" to 2"
-T -01-	BSPT (Tapered) Thread Connection	1/4" to 2"
-04-	2-1/4" Stem Extension (Carbon Steel, Zinc Plated)	1/4" to 2"
-05-	Plain Ball	1/4" to 2"
-07-	Steel Tee Handle	1/4" to 2"
-08-	90º Reversed Stem	3/4" to 2"
-10-	SS Lever & Nut	1/4" to 2"
-14-	Side Vented Ball (Uni-Directional)	1/4" to 2"
-15-	Wheel Handle, Steel	1/4" to 2"
-16-	Chain Lever - Vertical	1" to 2"
-17-	Rough Chrome Plated - Bronze Valves	1/4" to 2"
-20-	Slot Vented Ball (Bi-Directional) - Bronze Valves	1/4" to 2"
-24-	Graphite Packing	1/4" to 2"
-27-	SS Latch-Lock Lever & Nut	1/4" to 2"
-30-	Cam-Lock Handle & Grounded	1/4" to 2"
-32-	SS Tee Handle & Nut	1/4" to 2"
-39-	SS Hi-Rise, Locking Wheel Handle, SS Nut	1/2" to 1-1/2"
-40-	Cyl-Loc & Grounded	3/4" to 2"
-45-	Less Lever & Nut	1/4" to 2"
-46-	Latch Lock Lever - Lock in Closed Position Only	1/2" to 2"
-47-	SS Oval Latch-Lock Handle & Nut	1/4" to 2"
-48-	SS Oval Handle	1/4" to 2"
-49-	No Lubrication. Assembled Dry.	1/4" to 2"
-50-	2-1/4" CS Locking Stem Extension	3/4" to 2"
-57-	Oxygen Cleaned	1/4" to 2"
-58-	Chain Lever - Horizontal	1" to 2"
-60-	Grounded Ball & Stem	3/4" to 2"

Pressure/Temperature Ratings - Page M-10, Graph No. 4

90-100 SERIES

BRONZE UNI-BODY BALL VALVE

Female NPT Thread, 400 CWP (psig), Cold Non-Shock.
150 psig Saturated Steam.
MSS SP-110 Compliant.

FEATURES

- UL Listed at 400 psig for fuel, inert gas and flammable liquids
- Valves with tee handles UL listed
- Reinforced seats and seals
- Blowout-proof stem design
- Adjustable packing gland
- One piece bronze body
- Compact

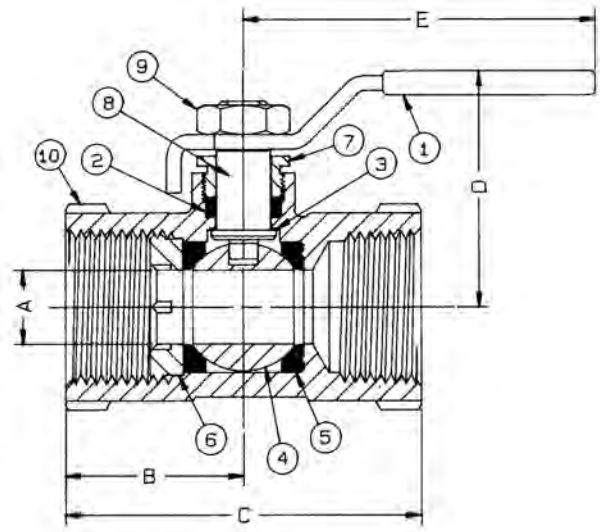

STANDARD MATERIAL LIST

	PART	MATERIAL
1	Lever and grip	Steel, zinc plated w/vinyl
2	Stem packing	RPTFE
3	Stem bearing	RPTFE
4	Ball	B16 Brass, chrome plated
5	Seat (2)	RPTFE
6	Retainer	B16 Brass
7	Gland nut	B16 Brass
8	Stem	B16 Brass
9	Lever nut (Screw 1/2")	Steel, zinc plated
10	Body	B584-C84400

DIMENSIONS

PRODUCT NO.	SIZE	A	B	C	D	E	WT.
90-103-01A	1/2"	0.38	1.14	2.15	1.64	3.87	0.53
90-104-01A	3/4"	0.50	1.36	2.61	1.78	3.87	0.82
90-105-01A	1"	0.63	1.50	2.90	2.14	4.78	1.25
90-106-01A	1-1/4"	0.81	1.79	3.50	2.31	4.78	1.98
90-107-01A	1-1/2"	1.00	1.96	3.79	2.87	5.43	2.99
90-108-01A	2"	1.25	2.29	4.42	3.09	5.43	4.64

UL LISTINGS

- Guide YRPV: Gas shutoff valve for use with natural and manufactured gases.
- Guide YQNZ: Compressed gas shutoff valve for use with air, inert gases, hydrogen, oxygen and common refrigerants except ammonia.
- Guide YRBX: Flammable liquid shutoff valve.

VARIATIONS AVAILABLE

- 90-140 Series (316 SS Ball & Stem)

OPTIONS AVAILABLE

(MORE INFORMATION IN SECTION J)

- Minimum quantities apply
- To specify an option, replace the "01" standard suffix with the suffix of the option.
- To specify multiple options, replace the "01" suffix with the desired suffixes in the numerical order shown below. NOTE: Not all suffixes can be combined together.

(SUFFIX)	OPTION	SIZES
-01	Standard Configuration	All
-02-	Static Grounded	1/2" to 2"
-04-	2-1/4" Stem Extension (Carbon Steel, Zinc Plated)	1/2" to 2"
-05-	Plain Ball	1/2" to 2"
-07-	Steel Tee Handle	1/2" to 2"
-15-	Wheel Handle, Steel	1/2" to 2"
-27-	SS Latch Lock Lever & Nut	1/2" to 2"
-57-	Oxygen Cleaned	1/2" to 2"

Pressure/Temperature Ratings - Page M-10, Graph No. 3

92-100 SERIES

CARBON STEEL UNI-BODY BALL VALVE

Female NPT Thread, 1/4" to 1" 2000 CWP (psig), 1-1/4" to 2" 1500 CWP (psig), Cold Non-Shock.
150 psig Saturated Steam.
Vacuum Service to 29 inches Hg.
MSS SP-110 Compliant.

FEATURES

- Fire safe to API 607 (requires -24 suffix)
- Investment cast body
- Reinforced seats and seals
- Blowout-proof stem design
- Zinc Phosphate corrosion protection
- Adjustable packing gland
- Meets NACE MR0175 (2000) & MR0103 (2012) with SS trim
- Compact

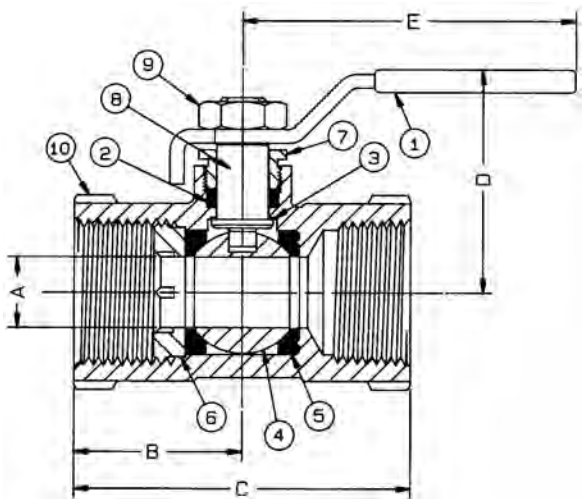

STANDARD MATERIAL LIST

	PART	MATERIAL
1	Lever and grip	Steel, zinc plated w/vinyl
2	Stem packing	MPTFE
3	Stem bearing	RPTFE
4	Ball	ASTM A108, Carbon Steel, Chrome Plated or ASTM A276, Type 316 Stainless Steel
5	Seat (2)	RPTFE
6	Retainer	A108-CS
7	Gland nut	A108-CS
8	Stem	A108-CS
9	Lever nut (Screw 1/4" to 1/2")	Steel, zinc plated
10	Body	A216-WCB

DIMENSIONS

PART NO.	SIZE	A	B	C	D	E	WT.
92-101-01	1/4"	0.38	1.14	2.21	1.64	3.87	0.49
92-102-01	3/8"	0.38	1.14	2.21	1.64	3.87	0.49
92-103-01	1/2"	0.38	1.14	2.21	1.64	3.87	0.49
92-104-01	3/4"	0.50	1.34	2.70	1.78	3.87	0.76
92-105-01	1"	0.63	1.51	3.03	2.00	4.78	1.21
92-106-01	1-1/4"	0.81	1.79	3.62	2.18	4.78	1.95
92-107-01	1-1/2"	1.00	1.95	4.00	2.69	5.43	2.92
92-108-01	2"	1.25	2.28	4.73	2.91	5.43	4.73

VARIATIONS AVAILABLE

- 92-140 Series (316 SS Ball & Stem)

OPTIONS AVAILABLE

(MORE INFORMATION IN SECTION J)

- Minimum quantities apply
- To specify an option, replace the "01" standard suffix with the suffix of the option.
- To specify multiple options, replace the "01" suffix with the desired suffixes in the numerical order shown below. NOTE: Not all suffixes can be combined together.

(SUFFIX)	OPTION	SIZES
-01	Standard Configuration	All
-P -01-	BSPP (Parallel) Thread Connection	1/4" to 2"
-T -01-	BSPT (Tapered) Thread Connection	1/4" to 2"
-02-	Static Grounded	1/4" to 2"
-04-	2-1/4" Stem Extension (Carbon Steel, Zinc Plated)	1/4" to 2"
-07-	Steel Tee Handle	1/4" to 2"
-08-	90º Reversed Stem	3/4" to 2"
-10-	SS Lever & Nut	1/4" to 2"
-14-	Side Vented Ball (Uni-Directional)	1/4" to 2"
-15-	Wheel Handle, Steel	1/4" to 2"
-16-	Chain Lever - Vertical	1" to 2"
-24-	Graphite Packing, PTFE Body Seal, RPTFE Bearing (Fire Safe API 607, 6th Edition, ISO 10497:2010)	1/4" to 2"
-27-	SS Latch-Lock Lever & Nut	1/4" to 2"
-30-	Cam-Lock Handle & Grounded	1/4" to 2"
-32-	SS Tee Handle & Nut	1/4" to 2"
-39-	SS Hi-Rise, Locking Wheel Handle, SS Nut	1/2" to 1-1/2"
-40-	Cyl-Loc & Grounded	3/4" to 2"
-45-	Less Lever & Nut	1/4" to 2"
-46-	Latch Lock Lever - Lock in Closed Position Only	1/2" to 2"
-47-	SS Oval Latch-Lock Handle & Nut	1/4" to 2"
-48-	SS Oval Handle	1/4" to 2"
-50-	2-1/4" CS Locking Stem Extension	3/4" to 2"
-58-	Chain Lever - Horizontal	1" to 2"
-60-	Grounded Ball & Stem	3/4" to 2"
-65-	Multifill Seats & Graphite Packing	1/4" to 2"
-UA-	AIS (American Iron & Steel) Compliant	All

Pressure/Temperature Ratings -
Page M-14, Graph No. 14 (1/4" to 1")
Page M-13, Graph No. 12 (1-1/4" to 2")

REV. 18JUL19

93-100 SERIES

CARBON STEEL UNI-BODY BALL VALVE

5 YEAR WARRANTY MADE IN USA

Female NPT Thread, 1/4" to 1" 2000 CWP (psig), 1-1/4" to 2" 1500 CWP (psig), Cold Non-Shock.
150 psig Saturated Steam.
MSS SP-110 Compliant.

FEATURES

- Fire safe to API 607 (requires -24 suffix)
- UNI-BODY barstock steel design
- Reinforced seats and seals
- Blowout-proof stem design
- Adjustable packing gland
- Compact
- Zinc Phosphate corrosion protection

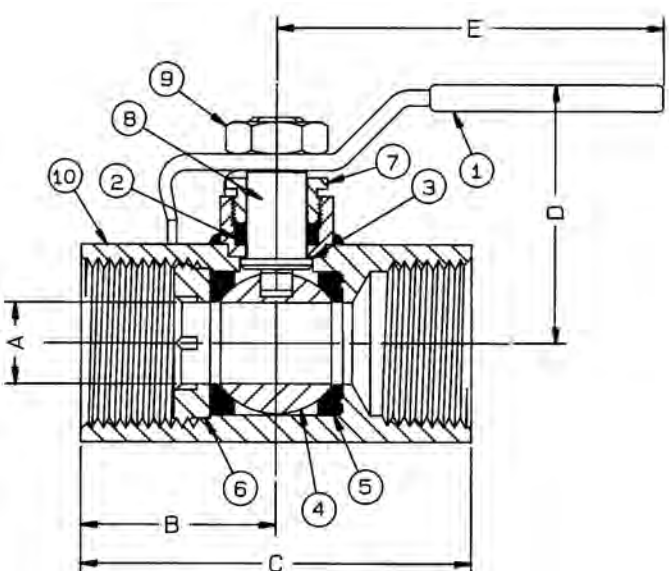

DIMENSIONS

PART NO.	SIZE	A	B	C	D	E	WT.
93-101-01	1/4"	0.38	1.14	2.18	1.63	3.68	0.56
93-102-01	3/8"	0.38	1.14	2.18	1.63	3.68	0.56
93-103-01	1/2"	0.38	1.14	2.18	1.63	3.68	0.56
93-104-01	3/4"	0.50	1.35	2.66	1.75	3.68	0.79
93-105-01	1"	0.63	1.51	3.03	1.93	4.68	1.27
93-106-01	1-1/4"	0.81	1.79	3.62	2.09	4.68	2.26
93-107-01	1-1/2"	1.00	1.96	4.00	2.71	5.50	3.57
93-108-01	2"	1.25	2.08	4.71	2.92	8.00	5.94

VARIATIONS AVAILABLE

- 93-140 Series (316 SS Ball & Stem)

OPTIONS AVAILABLE

(MORE INFORMATION IN SECTION J)

- Minimum quantities apply
- To specify an option, replace the "01" standard suffix with the suffix of the option.
- To specify multiple options, replace the "01" suffix with the desired suffixes in the numerical order shown below. NOTE: Not all suffixes can be combined together.

(SUFFIX)	OPTION	SIZES
-01	Standard Configuration	All
-P -01-	BSPP (Parallel) Thread Connection	1/4" to 2"
-T -01-	BSPT (Tapered) Thread Connection	1/4" to 2"
-02-	Static Grounded	1/4" to 2"
-04-	2-1/4" Stem Extension (Carbon Steel, Zinc Plated)	1/4" to 2"
-07-	Steel Tee Handle	1/4" to 2"
-08-	90º Reversed Stem	3/4" to 2"
-10-	SS Lever & Nut	1/4" to 2"
-14-	Side Vented Ball (Uni-Directional)	1/4" to 2"
-15-	Wheel Handle, Steel	1/4" to 1-1/2"
-19-	Lock Plate (Suggest using 92 Series)	1/4" to 2"
-24-	Graphite Packing, PTFE Body Seal, RPTFE Bearing (Fire Safe API 607, 6th Edition, ISO 10497:2010)	1/4" to 2"
-45-	Less Lever & Nut	1/4" to 2"
-60-	Grounded Ball & Stem	3/4" to 2"

Pressure/Temperature Ratings -
Page M-14, Graph No. 13 (1/4" to 1")
Page M-13, Graph No. 11 (1-1/4" to 2")

STANDARD MATERIAL LIST

	PART	MATERIAL
1	Lever and grip	Steel, zinc plated w/vinyl
2	Stem packing	MPTFE
3	Stem bearing	RPTFE
4	Ball	ASTM A108, Carbon Steel, Chrome Plated or ASTM A276, Type 316 Stainless Steel
5	Seat (2)	RPTFE
6	Retainer	A108-CS
7	Gland nut	A108-CS
8	Stem	A108-CS zinc plated
9	Lever nut (Screw 1/4" to 1/2")	Steel, zinc plated
10	Body	A108-CS

aalberts integrated piping systems

96-100 SERIES

STAINLESS STEEL UNI-BODY BALL VALVE

Female NPT Thread, 1/4" to 1" 2000 CWP (psig), 1-1/4" to 2" 1500 CWP (psig), Cold Non-Shock.
150 psig Saturated Steam.
Vacuum Service to 29 inches Hg.
MSS SP-110 Compliant.

FEATURES

- Fire safe to API 607 (requires -24 suffix)
- Investment cast body
- Reinforced seats and seals
- Blowout-proof stem design
- Adjustable packing gland
- Meets NACE MR0175 (2000) & MR0103 (2012)
- Compact
- AAR Approval No. E989054

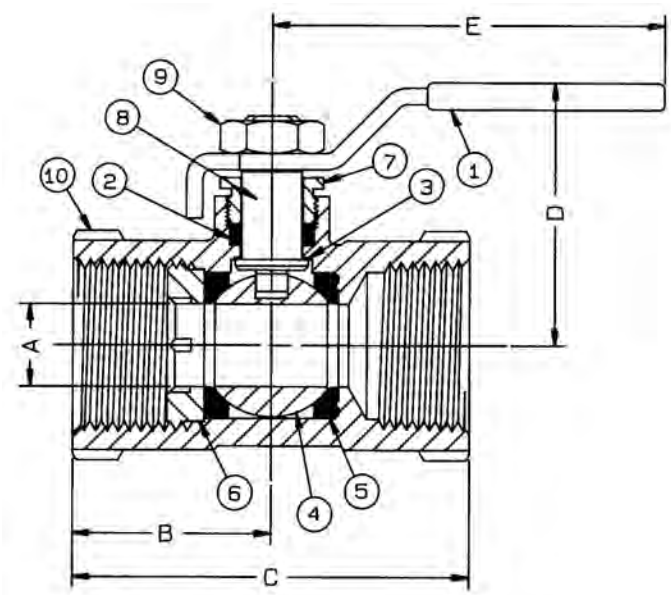

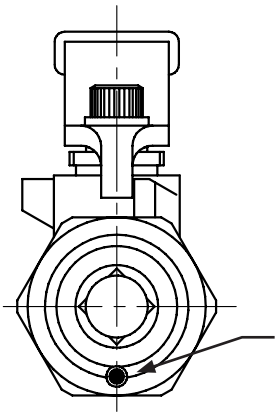

RETAINER PINNED
1/4" & 3/8" ONLY

OPTIONS AVAILABLE

(MORE INFORMATION IN SECTION J)

- Minimum quantities apply
- To specify an option, replace the "01" standard suffix with the suffix of the option.
- To specify multiple options, replace the "01" suffix with the desired suffixes in the numerical order shown below. NOTE: Not all suffixes can be combined together.

(SUFFIX)	OPTION	SIZES
-01	Standard Configuration	All
-02-	Stem Grounded	1/4" to 2"
-04-	2-1/4" Stem Extension (Carbon Steel, Zinc Plated)	1/4" to 2"
-07-	Steel Tee Handle	1/4" to 2"
-08-	90º Reversed Stem	3/4" to 2"
-14-	Side Vented Ball (Uni-Directional)	1/4" to 2"
-15-	Wheel Handle, Steel	1/4" to 2"
-16-	Chain Lever - Vertical	1" to 2"
-24-	Graphite Packing, PTFE Body Seal, RPTFE Bearing (Fire Safe API 607, 6th Edition, ISO 10497:2010)	1/4" to 2"
-27-	SS Latch-Lock Lever & Nut	1/4" to 2"
-30-	Cam-Lock Handle & Grounded	1/4" to 2"
-32-	SS Tee Handle & Nut	1/4" to 2"
-39-	SS Hi-Rise, Locking Wheel Handle, SS Nut	1/2" to 1-1/2"
-40-	Cyl-Loc & Grounded	3/4" to 2"
-45-	Less Lever & Nut	1/4" to 2"
-47-	SS Oval Latch-Lock Handle & Nut	1/4" to 2"
-49-	No Lubrication. Assembled Dry.	1/4" to 2"
-57-	Oxygen Cleaned	1/4" to 2"
-58-	Chain Lever - Horizontal	1" to 2"
-60-	Grounded Ball & Stem	3/4" to 2"
-UA-	AIS (American Iron & Steel) Compliant	All

Pressure/Temperature Ratings -
Page M-14, Graph No. 14 (1/4" to 1")
Page M-13, Graph No. 12 (1-1/4" to 2")

DIMENSIONS

PART NO.	SIZE	A	B	C	D	E	WT.
96-101-01	1/4"	0.38	1.14	2.21	1.64	3.87	0.49
96-102-01	3/8"	0.38	1.14	2.21	1.64	3.87	0.49
96-103-01	1/2"	0.38	1.14	2.21	1.64	3.87	0.49
96-104-01	3/4"	0.50	1.33	2.70	1.78	3.87	0.76
96-105-01	1"	0.63	1.51	3.03	2.00	4.78	1.21
96-106-01	1-1/4"	0.81	1.79	3.62	2.18	4.78	1.95
96-107-01	1-1/2"	1.00	1.95	4.00	2.66	5.43	2.92
96-108-01	2"	1.25	2.28	4.73	2.87	5.43	4.73

STANDARD MATERIAL LIST

	PART	MATERIAL
1	Lever and grip	304 SS w/vinyl
2	Stem packing	MPTFE
3	Stem bearing	RPTFE
4	Ball	A276-316
5	Seat (2)	RPTFE
6	Retainer	A276-316
7	Gland nut	A276-316
8	Stem	A276-316
9	Lever nut (Screw 1/4" to 1/2")	18-8 SS
10	Body	A351-CF8M

REV. 18JUL18

96-J00 SERIES

DUPLEX STAINLESS STEEL UNI-BODY BALL VALVE

5 YEAR WARRANTY MADE IN USA

Female NPT Threaded, 1/4" to 1" 2000 CWP (psig), 1-1/4" to 2" 1500 CWP (psig), Cold Non-Shock.
150 psig Saturated Steam.
Vacuum Service to 29 inches Hg.
MSS SP-110 Compliant.

FEATURES

- Fire safe "by design" (requires -24 suffix)
- Investment cast body
- •Reinforced seats and seals
- Blowout-proof stem design
- Adjustable packing gland
- Compact

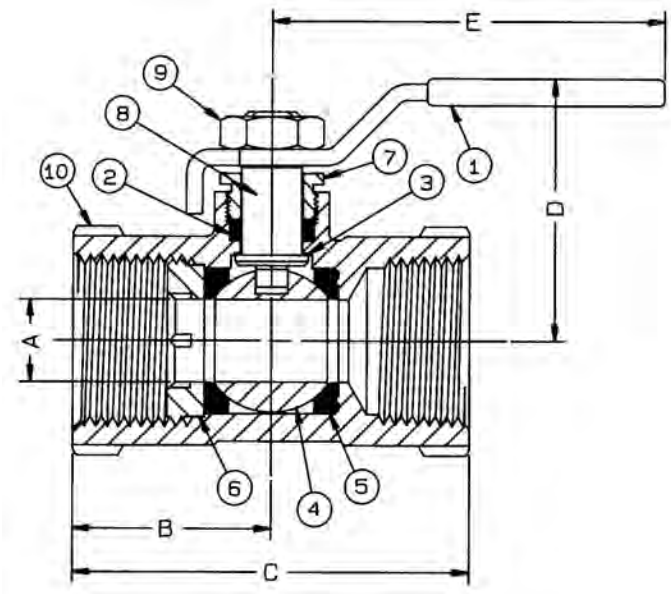

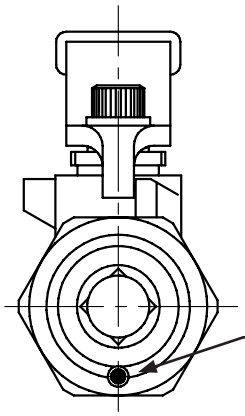

RETAINER PINNED
1/4" & 3/8" ONLY

OPTIONS AVAILABLE

(MORE INFORMATION IN SECTION J)

- Minimum quantities apply
- To specify an option, replace the "01" standard suffix with the suffix of the option.
- To specify multiple options, replace the "01" suffix with the desired suffixes in the numerical order shown below. NOTE: Not all suffixes can be combined together.

(SUFFIX)	OPTION	SIZES
-01	Standard Configuration	All
-02-	Stem Grounded	1/4" to 2"
-04-	2-1/4" Stem Extension (Carbon Steel, Zinc Plated)	1/4" to 2"
-07-	Steel Tee Handle	1/4" to 2"
-08-	90º Reversed Stem	3/4" to 2"
-14-	Side Vented Ball (Uni-Directional)	1/4" to 2"
-15-	Wheel Handle, Steel	1/4" to 2"
-16-	Chain Lever - Vertical	1" to 2"
-24-	Graphite packing (fire safe "by design")	1/4" to 2"
-27-	SS Latch-Lock Lever & Nut	1/4" to 2"
-30-	Cam-Lock Handle & Grounded	1/4" to 2"
-32-	SS Tee Handle & Nut	1/4" to 2"
-39-	SS Hi-Rise, Locking Wheel Handle, SS Nut	1/2" to 1-1/2"
-40-	Cyl-Loc & Grounded	3/4" to 2"
-45-	Less Lever & Nut	1/4" to 2"
-47-	SS Oval Latch-Lock Handle & Nut	1/4" to 2"
-49-	No Lubrication. Assembled Dry.	1/4" to 2"
-57-	Oxygen Cleaned	1/4" to 2"
-58-	Chain Lever - Horizontal	1" to 2"
-60-	Grounded Ball & Stem	3/4" to 2"
-UA-	AIS (American Iron & Steel) Compliant	All

Pressure/Temperature Ratings -
Page M-29, Graph No. 43 (1/4" to 1")
Page M-30, Graph No. 44 (1-1/4" to 2")

DIMENSIONS

PART NO.	SIZE	A	B	C	D	E	WT.
96J-101-01	1/4"	0.38	1.14	2.21	1.64	3.87	0.49
96J-102-01	3/8"	0.38	1.14	2.21	1.64	3.87	0.49
96J-103-01	1/2"	0.38	1.14	2.21	1.64	3.87	0.49
96J-104-01	3/4"	0.50	1.33	2.70	1.78	3.87	0.76
96J-105-01	1"	0.63	1.51	3.03	2.00	4.78	1.21
96J-106-01	1-1/4"	0.81	1.79	3.62	2.18	4.78	1.95
96J-107-01	1-1/2"	1.00	1.95	4.00	2.66	5.43	2.92
96J-108-01	2"	1.25	2.28	4.73	2.87	5.43	4.73

STANDARD MATERIAL LIST

	PART	MATERIAL
1	Lever and grip	304 SS w/vinyl
2	Stem packing	MPTFE
3	Stem bearing	RPTFE
4	Ball	ASTM A276/A479 Alloy 2205
5	Seat (2)	RPTFE
6	Retainer	ASTM A995 4A
7	Gland nut	A276-316
8	Stem	ASTM A276/A479 Alloy 2205
9	Lever nut (Screw 1/4" to 1/2")	18-8 SS
10	Body	ASTM A995 4A

REV. 15JAN19

aalberts integrated piping systems

96K-100 SERIES

SUPER DUPLEX STAINLESS STEEL UNI-BODY BALL VALVE

Female NPT Threaded, 1/4" to 1" 2000 CWP (psig), 1-1/4" to 2" 1500 CWP (psig), Cold Non-Shock.
150 psig Saturated Steam.
Vacuum Service to 29 inches Hg.
MSS SP-110 Compliant.

FEATURES

- Fire safe "by design" (requires -24 suffix)
- Investment cast body
- Reinforced seats and seals
- Blowout-proof stem design
- Adjustable packing gland
- Compact
- AAR Approval No. E989054

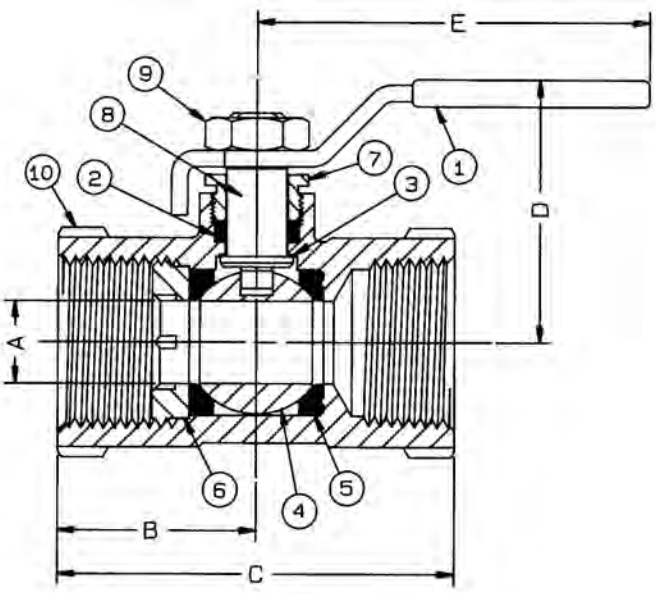

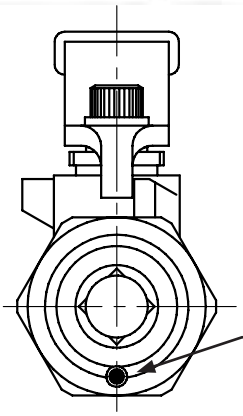

RETAINER PINNED
1/4" & 3/8" ONLY

OPTIONS AVAILABLE

(MORE INFORMATION IN SECTION J)

- Minimum quantities apply
- To specify an option, replace the "01" standard suffix with the suffix of the option.
- To specify multiple options, replace the "01" suffix with the desired suffixes in the numerical order shown below. NOTE: Not all suffixes can be combined together.

(SUFFIX)	OPTION	SIZES
-01	Standard Configuration	All
-02-	Stem Grounded	1/4" to 2"
-04-	2-1/4" Stem Extension (Carbon Steel, Zinc Plated)	1/4" to 2"
-07-	Steel Tee Handle	1/4" to 2"
-08-	90º Reversed Stem	3/4" to 2"
-14-	Side Vented Ball (Uni-Directional)	1/4" to 2"
-15-	Wheel Handle, Steel	1/4" to 2"
-16-	Chain Lever - Vertical	1" to 2"
-24-	Graphite packing (fire safe "by design")	1/4" to 2"
-27-	SS Latch-Lock Lever & Nut	1/4" to 2"
-30-	Cam-Lock Handle & Grounded	1/4" to 2"
-32-	SS Tee Handle & Nut	1/4" to 2"
-39-	SS Hi-Rise, Locking Wheel Handle, SS Nut	1/2" to 1-1/2"
-40-	Cyl-Loc & Grounded	3/4" to 2"
-45-	Less Lever & Nut	1/4" to 2"
-47-	SS Oval Latch-Lock Handle & Nut	1/4" to 2"
-49-	No Lubrication. Assembled Dry.	1/4" to 2"
-57-	Oxygen Cleaned	1/4" to 2"
-58-	Chain Lever - Horizontal	1" to 2"
-60-	Grounded Ball & Stem	3/4" to 2"
-UA-	AIS (American Iron & Steel) Compliant	All

Pressure/Temperature Ratings -
Page M-29, Graph No. 43 (1/4" to 1")
Page M-30, Graph No. 44 (1-1/4" to 2")

DIMENSIONS

PART NO.	SIZE	A	B	C	D	E	WT.
96K-101-01	1/4"	0.38	1.14	2.21	1.64	3.87	0.49
96K-102-01	3/8"	0.38	1.14	2.21	1.64	3.87	0.49
96K-103-01	1/2"	0.38	1.14	2.21	1.64	3.87	0.49
96K-104-01	3/4"	0.50	1.33	2.70	1.78	3.87	0.76
96K-105-01	1"	0.63	1.51	3.03	2.00	4.78	1.21
96K-106-01	1-1/4"	0.81	1.79	3.62	2.18	4.78	1.95
96K-107-01	1-1/2"	1.00	1.95	4.00	2.66	5.43	2.92
96K-108-01	2"	1.25	2.28	4.73	2.87	5.43	4.73

STANDARD MATERIAL LIST

	PART	MATERIAL
1	Lever and grip	304 SS w/vinyl
2	Stem packing	MPTFE
3	Stem bearing	RPTFE
4	Ball	ASTM A276/A479 Alloy 2507
5	Seat (2)	RPTFE
6	Retainer	ASTM A276/A479 Alloy 2507
7	Gland nut	A276-316
8	Stem	ASTM A276/A479 Alloy 2507
9	Lever nut (Screw 1/4" to 1/2")	18-8 SS
10	Body	ASTM A995 6A

SECTION C

REVISIONS

PAGE	DATE	DESCRIPTION
C-3, C-5, C-7, C-8, C-9	22JUN16	Added -39 option to option table.
C-5	18JUL19	Added "-UA" (AIS (American Iron & Steel) Compliant) suffix option
C-7 THRU C9	18JUL19	Added "-UA" (AIS (American Iron & Steel) Compliant) suffix option
	15JAN19	Added pinned retainer drawing
C-8	04APR16	Corrected page & graph number of Pressure-Temperature ratings
C-9	04APR16	Corrected page & graph number of Pressure-Temperature ratings

"Apollo" Valves | INDUSTRIAL PRODUCTS

Flanged Ball Valves

section D

SECTION D

ASME FLANGED BALL VALVES

SERIES	DESCRIPTION	PAGE
	Features & Benefits	D-3
	Available Variations	D-4

CLASS 150		
CARBON STEEL		
88A-100 SERIES	ASME Class 150 Flanged Carbon Steel	D-55-58
88A-200 SERIES	ASME Class 150 Flanged Full Port Carbon Steel	D-59-62
88B-100 SERIES	ASME Class 150 Flanged Uni-Body Carbon Steel	D-71-72
88L-140 SERIES	ASME Class 150 Flanged Low Temp Carbon Steel	D-73-76
88L-240 SERIES	ASME Class 150 Flanged Full Port Low Temp Carbon Steel	D-77-80
STAINLESS STEEL		
87A-100 SERIES	ASME Class 150 Flanged Stainless Steel	D-5-8
87A-200 SERIES	ASME Class 150 Flanged Full Port Stainless Steel	D-9-12
87B-100 SERIES	ASME Class 150 Flanged Uni-Body Stainless Steel	D-21-22
DUPLEX STAINLESS STEEL		
87J-100 SERIES	Duplex ASME Class 150 Flanged Stainless Steel	D-23-26
87J-200 SERIES	Duplex ASME Class 150 Flanged Full Port Stainless Steel	D-27-30
SUPER DUPLEX STAINLESS STEEL		
87K-100 SERIES	Super Duplex ASME Class 150 Flanged Stainless Steel	D-39-42
87K-200 SERIES	Super Duplex ASME Class 150 Flanged Full Port Stainless Steel	D-43-46
ALLOY 20		
87A-400 SERIES	ASME Class 150 Flanged Alloy 20	D-89-91
87A-500 SERIES	ASME Class 150 Flanged Full Port Alloy 20	D-92-94
HASTELLOY C		
87H-100 SERIES	ASME Class 150 Flanged Hastelloy C	D-95-98
87H-200 SERIES	ASME Class 150 Flanged Full Port Hastelloy C	D-99-102

CLASS 300		
CARBON STEEL		
88A-700 SERIES	ASME Class 300 Flanged Carbon Steel	D-63-66
88A-900 SERIES	ASME Class 300 Flanged Full Port Carbon Steel	D-67-70
88L-740 SERIES	ASME Class 300 Flanged Low Temp Carbon Steel	D-81-84
88L-940 SERIES	ASME Class 300 Flanged Full Port Low Temp Carbon Steel	D-85-88
STAINLESS STEEL		
87A-700 SERIES	ASME Class 300 Flanged Stainless Steel	D-13-16
87A-900 SERIES	ASME Class 300 Flanged Full Port Stainless Steel	D-17-20
DUPLEX STAINLESS STEEL		
87J-700 SERIES	Duplex ASME Class 300 Flanged Stainless Steel	D-31-34
87J-900 SERIES	Duplex ASME Class 300 Flanged Full Port Stainless Steel	D-35-38
SUPER DUPLEX STAINLESS STEEL		
87K-700 SERIES	Super Duplex ASME Class 300 Flanged Stainless Steel	D-47-50
87K-900 SERIES	Super Duplex ASME Class 300 Flanged Full Port Stainless Steel	D-51-54
ALLOY 20		
87A-600 SERIES	ASME Class 300 Flanged Alloy 20	D-103-106
HASTELLOY C		
87H-700 SERIES	ASME Class 300 Flanged Hastelloy C	D-107-110
87H-900 SERIES	ASME Class 300 Flanged Full Port Hastelloy C	D-111-114

CLASS 600		
CARBON STEEL		
88A-F00 SERIES	ASME Class 600 Flanged Full Port Carbon Steel	D-120-124
88L-F40 SERIES	ASME Class 600 Flanged Full Port Low Temp Carbon Steel	D-125-129
STAINLESS STEEL		
87A-F00 SERIES	ASME Class 600 Flanged Full Port Stainless Steel	D-115-119

FEATURES & BENEFITS

ASME FLANGED BALL VALVES

87A, 87A-F, 87B, 88A, 88A-F, 88B, 88L, & 88L-F SERIES

STANDARDS COMPLIANCE

Except where specifically noted all valves within this family of products complies with the requirements of this listed standard.

- ASME B16.5 ”Pipe Flanges and Flanged Fittings”
- ASME B16.10 ”Face to Face Dimensions of Valves”
- ASME B16.34 ”Valves - Flanged, Threaded, and Welding End”
- ASME B16.33 “Manual Operated Metallic Gas Valves for Use in Gas Piping Systems up to 125 psig”
- ASME B16.38 “Large Metallic Valves for Gas Distribution (Manually Operated NPS 2-1/2” to 12”, 125 psig)”
- ASME B31.1 “Power Piping”
- ASME B31.3 “Chemical Plant and Petroleum Refinery Piping”
- ASME B31.8 “Gas Transmission and Distribution Piping Systems”
- API 607 ”Fire Test - Soft Seated Quarter Turn Valves” (-24 Option Required). See specific tech sheet for 5th or 6th edition.
- API 608 ”Ball Valves - Flanged, Threaded, and Welding End”
- MStainless Steel SP-25 ”Standard Marking System for Valves”
- MStainless Steel SP-61 ”Pressure Testing of Steel Valves”
- MStainless Steel SP-72 ”Ball Valves with Flanged or Buttweld Ends”
- UL 125 “Valves for Anhydrous Ammonia and LP-Gas (Other than Safety Relief)”
- NSF/ANSI/CAN 61 Section 8, Annex G (1/2” to 4” 87A Series)
- NSF/ANSI 372 Drinking Water System Components - Lead Content (1/2” to 4” 87A Series)

STANDARD FEATURES

Except where specifically noted all valves within this family of products include all listed features as standard.

- Two Position Locking Device (Valves 6” Full Port, 8” Standard Port and smaller)
- Chevron Style Adjustable Stem Seals
- ISO 5211 Mounting Pad Bolt Pattern
- Slot Vented Ball for Thermal Expansion
- Rated up to 150 psig Saturated Steam: ASME Class 150, 300, & 600 Valves
- Rated up to 250 psig Saturated Steam: ASME Class 300 Valves Require the -65 Option
- ASME Class 600 Valves Require the -24-80 Options or -38 Option
- Anti-static Grounded Ball and Stem
- Blowout-Proof Stem Design
- Cast Boss for Bleed / Drain Port
- Vacuum Service to 29 inches of Hg
- NACE MR0175 (2000) Compliance on all 87A/87B/88A/88B/88L Valves with Stainless Steel Ball & Stem
- NACE MR0103 (2003) Compliance on all 87A/87B/88A/88B/88L Valves with Stainless Steel Ball & Stem

PRODUCT APPROVALS

- **CSA* (Reference: ASME B16.33 & B16.38)**
  ASME Class 150 & 300 only
- **UL* (Reference: Control Number 195H)**
  ASME Class 150 & 300 only
  UL (YSDT) LP-Gas Shut-Off Valves
  UL (MHKZ) Manual Valves
  UL (YRBX) Flammable Liquid Shut-Off Valves
  UL (YRPV) Gas Shut-Off Valves
  UL (YQNZ) Compressed Gas Shut-Off Valves
  UL (YQAR) Anhydrous Ammonia Shut-Off Valves
  **Requires “UL” suffix for markings.*
- **CE Marking(with “-CE” suffix):**
  Marking is available with all the flanged ball valves listed below
  - 87A
  - 87A (Alloy 20)
  - 87B
  - 87C
  - 87G
  - 87J
  - 87K
  - 87M
  - 87R
  - 88A
  - 88B
  - 88L

AVAILABLE VARIATIONS

ASME FLANGED BALL VALVES

VARIATIONS AVAILABLE

REFERENCE DATA				ALLOY SERIES FLANGED BALL VALVES				
SIZE	PORT	ANSI CLASS	DIMENSIONAL DATA PAGE	STAINLESS STEEL	ALLOY 20	HASTELLOY*	NICKEL*	NI-CU*
1-1/2" & 2"	Standard	150	D-1	87A-10X	87A-40X	87H-1HX	87N-1NX	87M-13X
2-1/2" & 3"	Standard	150	D-2	87A-10X	87A-40X	87H-1HX	87N-1NX	N/A
4", 6" & 8"	Standard	150	D-3	87A-10X	87A-40X	87H-1HX	87N-1NX	N/A
10"	Standard	150	D-4	87A-10X	87A-40X	87H-1HX	87N-1NX	N/A
1/2", 3/4" & 1"	Full	150	D-5	87A-20X	87A-50X	87H-2HX	87N-2NX	87M-23X
1-1/2", 2" & 2-1/2"	Full	150	D-6	87A-20X	87A-50X	87H-2HX	87N-2NX	87M-23X
3", 4", & 6"	Full	150	D-7	87A-20X	87A-50X	87H-2HX	87N-2NX	N/A
8", 10" & 12"	Full	150	D-8	87A-20X	87A-50X	87H-2HX	87N-2NX	N/A
1-1/2" & 2"	Standard	300	D-9	87A-70X	87A-80X	87H-7HX	87N-7NX	N/A
2-1/2" & 3"	Standard	300	D-10	87A-70X	87A-80X	87H-7HX	87N-7NX	N/A
4", 6" & 8"	Standard	300	D-11	87A-70X	87A-80X	87H-7HX	87N-7NX	N/A
10"	Standard	300	D-12	87A-70X	87A-80X	87H-7HX	87N-7NX	N/A
1/2", 3/4" & 1"	Full	300	D-13	87A-90X	87A-60X	87H-9HX	87N-9NX	87M-93X
1-1/2", 2" & 2-1/2"	Full	300	D-14	87A-90X	87A-60X	87H-9HX	87N-9NX	87M-93X
3", 4", & 6"	Full	300	D-15	87A-90X	87A-60X	87H-9HX	87N-9NX	N/A
8", 10" & 12"	Full	300	D-16	87A-90X	87A-60X	87H-9HX	87N-9NX	N/A

** Minimum Quantities May Apply*

ALLOY MATERIAL OF CONSTRUCTION FOR PRESSURE CONTAINING/RETAINING COMPONENTS

ALLOY	STAINLESS STEEL	ALLOY 20	HASTELLOY*	NICKEL*	NI-CU ALLOY*
Valve Series	87A-100/200, 87A-700/900	87A-400/500, 87A-600/800	87H-1H0/2H0, 87H-7H0/9H0	87N-1N0/2N0, 87N-7N0/9N0	87M-130/230, 87M-730/930
Body	A351-CF8M	A351-CN7M	A494-CW12MW	A494-CZ100	A494-M35-1
Retainer	A351-CF8M or A276-316	A351-CN7M or B473-N08020	A494-CW12MW or B574-C276	A494-CZ100 or B160-200	A494-M35-1 or B164-K400
Ball	A351-CF8M or A276-316	A351-CN7M or B473-N08020	A494-CW12MW or B574-C276	A494-CZ100 or B160-200	A494-M35-1 or B164-K400
Stem	A276-316	B473-N08020	B574-C276	B160-200	B164-K400
Fasteners	A193-B8M, A194-Gr8	A193-B8M, A194-Gr8	A193-B8M, A194-Gr8	A193-B8M, A194-Gr8	A193-B8M, A194-Gr8

** Minimum Quantities May Apply*

87A-100 SERIES

STAINLESS STEEL ASME CLASS 150 FLANGED STD. PORT BALL VALVE
1-1/2" THRU 2"

5 YEAR WARRANTY MADE IN USA

FOR STANDARDS COMPLIANCE AND STANDARD FEATURES REFER TO PAGE D-3.

STANDARD MATERIAL LIST

	PART	MATERIAL
1	Body	ASTM A351 CF8M
2	Retainer	ASTM A276 Type 316
3	Ball	ASTM A276 Type 316
4	Stem	ASTM A276 Type 316
5	Packing Gland	ASTM A276 Type 316
6	Stem Seals	PTFE
7	Seats	TFM 1700
8	Gland Screws	ASTM A193 B8 Class 1
9	Gland Plate	302 or 304 Stainless Steel
10	Stem Nut	316 Stainless Steel
11	Lever	302 or 304 Stainless Steel with Vinyl Grip
12	Stem Bearing	RPTFE
13	Stop	ASTM A276 Type 316
14	Stop Screw	18-8 Stainless Steel
15	Lock Plate	302 or 304 Stainless Steel
16	Body Seal	RPTFE
17	Lockwasher	302 or 304 Stainless Steel
18	Grounding Spring	Stainless Steel

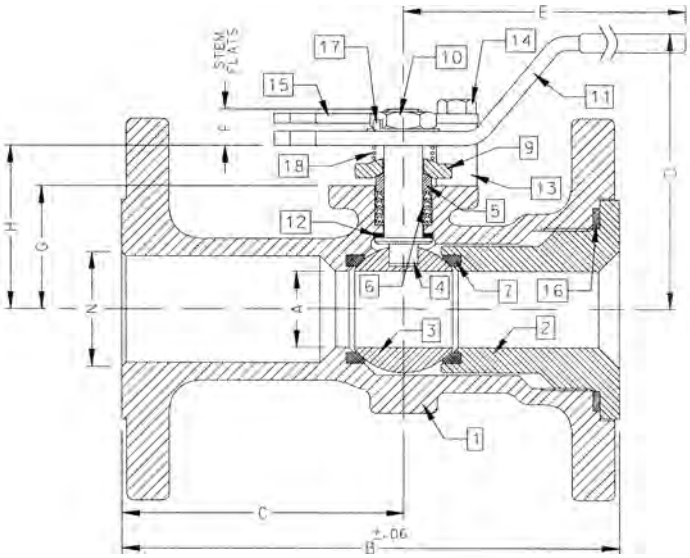

ACTUATOR MOUNTING

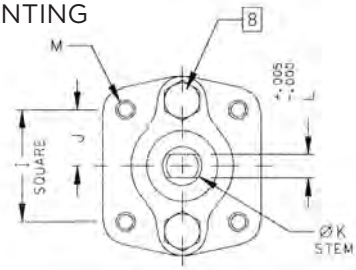

VARIATIONS AVAILABLE

- 87H - Hastelloy
- 87M - Monel (1-1/2" to 2" only)
- 87N - Nickel
- 87S - 304L Stainless Steel

OPTIONS AVAILABLE

(MORE INFORMATION IN SECTION J)

- Minimum quantities apply.
- To specify an option, replace the "01" standard suffix with the suffix of the option.
- To specify multiple options, replace the "01" suffix with the desired suffixes in the numerical order shown below. NOTE: Not all suffixes can be combined together.

(SUFFIX)	OPTION
-01	Standard Configuration
-04-	2-1/4" Stem Extension (Carbon Steel, Zinc Plated)
-14-	Side Vented Ball (Uni-Directional)
-15-	Wheel Handle, Steel
-21-	UHMWPE Seats
-24-	Graphite Packing, Spiral Wound Graphite Body Seal, RPTFE Bearing (API 607, 6th Edition, ISO 10497:2010)
-35-	PTFE Seats and Seals
-38-	PEEK Seats and Graphite Packing
-49-	No Lubrication. Assembled Dry
-57-	Oxygen Cleaned
-65-	MPTFE Seats and Graphite Packing (Fire Safe)
-69-	Drilled and Tapped Purge Port with Plug
-70-	4" Extended Bonnet
-73-	316 Stainless Steel Spiral Wound Gaskets with PTFE Filler
-76-	Live Loaded (Lever)
-77-	Live Loaded (Gear, Actuator)
-80-	TFM 1600 Seats, PTFE Chevron Packing, Spiral Wound PTFE Body Seal PEEK Bearing
-82-	Flat Face Flanges
-90-	Double Packed 4" Extended Bonnet
-9P-	Double Packed 4" Extended Bonnet with Monitoring Port
-CE-	CE Marking. See Page D-3 "Product Approvals" for Availability
-EF-	Graphite Packing (API 641 Compliant)
-EP-	Garlock EVSP Stem Packing with Spiral Wound Graphite Gasket (Fire Safe by Design)
-KF-	PCTFE Stem Bearing
-MP-	Positive Material Identification
-TC-	With Test Certificate
-TD-	Tested to API Spec 6D
-UA-	AIS (American Iron & Steel) Compliant
-UL-	UL & CSA Listed (with Markings)
-ZP1-	Fugitive Emissions Packing (Viton)
-ZP2-	Fugitive Emissions Packing (Buna-N)
-ZP3-	Fugitive Emissions Packing (Kalrez)

Pressure/Temperature Ratings - Page M-9, Graph No. 2

DIMENSIONS

PART NO.	SIZE	A	B	C	D	E	F	G	H	I	J	K	L	M	N	WT.
87A-107-01	1-1/2"	1.25	6.50	3.50	4.85	6.53	0.47	1.85	2.38	1.392	0.696	0.500	0.287	1/4-20	1.50	9
87A-108-01	2"	1.50	7.00	3.69	4.62	6.65	0.72	2.41	3.09	1.949	0.974	0.625	0.412	5/16-18	2.00	18

REV. 18JUL19

87A-100 SERIES

STAINLESS STEEL ASME CLASS 150 FLANGED STD. PORT BALL VALVE
2-1/2" THRU 3"

5 YEAR WARRANTY MADE IN USA

FOR STANDARDS COMPLIANCE AND STANDARD FEATURES REFER TO PAGE D-3.

STANDARD MATERIAL LIST

	PART	MATERIAL
1	Body	ASTM A351 CF8M
2	Retainer	ASTM A351 CF8M
3	Ball	ASTM A276 Type 316 or A351 CF8M
4	Stem	ASTM A276 Type 316
5	Packing Gland	ASTM A276 Type 316
6	Stem Seals	PTFE
7	Seats	TFM 1700
8	Gland Screws	ASTM A193 B8 Class 1
9	Gland Plate	316 Stainless Steel
10	Stem Nut	18-8 Stainless Steel
11	Lever	316 Stainless Steel
12	Stem Bearing	RPTFE
13	Stop	ASTM A276 Type 316
14	Stop Screw	316 Stainless Steel
15	Lock Plate	302 or 304 Stainless Steel
16	Body Seal	RPTFE
17	Grounding Spring	Stainless Steel
18	Body Joint Stud	ASTM A193 Grade B8M
19	Body Joint Nut	ASTM A194 Grade 8
20	Lockwasher	302 or 304 Stainless Steel

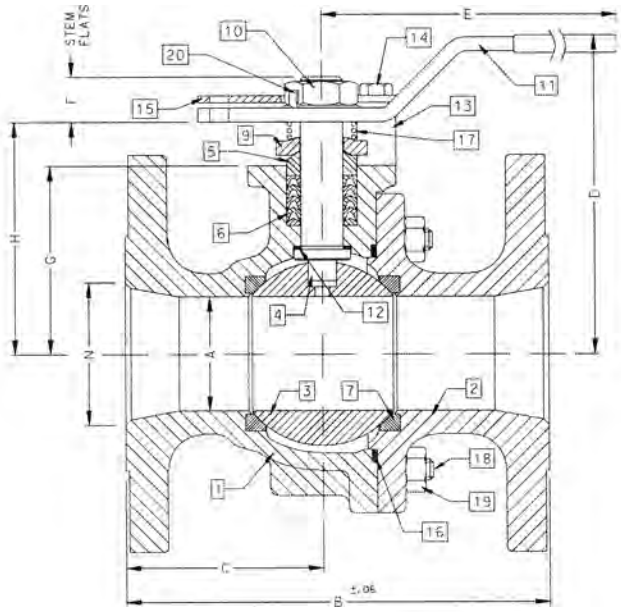

ACTUATOR MOUNTING

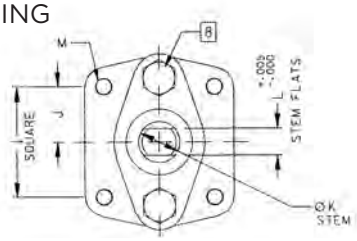

VARIATIONS AVAILABLE

- 87H - Hastelloy
- 87N - Nickel
- 87S - 304L Stainless Steel

OPTIONS AVAILABLE

(MORE INFORMATION IN SECTION J)

- Minimum quantities apply.
- To specify an option, replace the "01" standard suffix with the suffix of the option.
- To specify multiple options, replace the "01" suffix with the desired suffixes in the numerical order shown below. NOTE: Not all suffixes can be combined together.

(SUFFIX)	OPTION
-01	Standard Configuration
-04-	2-1/4" Stem Extension (Carbon Steel, Zinc Plated)
-14-	Side Vented Ball (Uni-Directional)
-21-	UHMWPE Seats
-24-	Graphite Packing, Spiral Wound Graphite Body Seal, RPTFE Bearing (API 607, 6th Edition, ISO 10497:2010)
-35-	PTFE Seats and Seals
-38-	PEEK Seats and Graphite Packing
-49-	No Lubrication. Assembled Dry
-57-	Oxygen Cleaned
-65-	MPTFE Seats and Graphite Packing (Fire Safe)
-67-	Cleaned for Industrial Gases
-69-	Drilled and Tapped Purge Port with Plugs
-70-	4" Extended Bonnet
-73-	316 Stainless Steel Spiral Wound Gaskets with PTFE Filler
-76-	Live Loaded 87A/88A Series (Lever)
-77-	Live Loaded (Gear, Actuator)
-80-	TFM 1600 Seats, PTFE Chevron Packing, Spiral Wound PTFE Body Seal PEEK Bearing
-82-	Flat Face Flanges
-90-	Double Packed 4" Extended Bonnet
-9P-	Double Packed 4" Extended Bonnet with Monitoring Port
-CE-	CE Marking. See Page D-3 "Product Approvals" for Availability
-EF-	Graphite Packing (API 641 Compliant)
-EP-	Garlock EVSP Stem Packing with Spiral Wound Graphite Gasket (Fire Safe by Design)
-KF-	PCTFE Stem Bearing
-MG-	Gear Operator with Standard Handwheel
-MH-	Gear Operator with Standard Handwheel & Locking Device
-MJ-	Gear Operator with Oversize Handwheel
-MK-	Gear Operator with Oversize Handwheel & Locking Device
-MP-	Positive Material Identification
-TC-	With Test Certificate
-TD-	Tested to API Spec 6D
-UA-	AIS (American Iron & Steel) Compliant
-UL-	UL & CSA Listed (with Markings)
-ZP1-	Fugitive Emissions Packing (Viton)
-ZP2-	Fugitive Emissions Packing (Buna-N)
-ZP3-	Fugitive Emissions Packing (Kalrez)

Pressure/Temperature Ratings - Page M-9, Graph No. 2

DIMENSIONS

PART NO.	SIZE	A	B	C	D	E	F	G	H	I	J	K	L	M	N	WT.
87A-109-01	2-1/2"	2.00	7.50	3.50	5.61	8.41	0.80	3.31	4.08	1.949	0.974	0.750	0.477	5/16-18	2.50	27
87A-100-01	3"	2.50	8.00	3.51	6.24	8.41	0.80	3.94	4.71	1.949	0.974	0.750	0.477	5/16-18	3.00	34

REV. 18JUL19

aalberts integrated piping systems

87A-100 SERIES

STAINLESS STEEL ASME CLASS 150 FLANGED STD. PORT BALL VALVE
4" THRU 8"

5 YEAR WARRANTY MADE IN USA

FOR STANDARDS COMPLIANCE AND STANDARD FEATURES REFER TO PAGE D-3.

STANDARD MATERIAL LIST

	PART	MATERIAL
1	Body	ASTM A351 CF8M
2	Retainer	ASTM A351 CF8M
3	Ball	ASTM A276 Type 316 or A351 CF8M
4	Stem	ASTM A276 Type 316
5	Packing Gland	ASTM A276 Type 316
6	Stem Seals	PTFE
7	Seats	RPTFE
8	Gland Screws	ASTM A193 B8 Class 1
9	Gland Plate	316 Stainless Steel
10	Adapter Screw	18-8 Stainless Steel
11	Handle Adapter	316 Stainless Steel
12	Stem Bearing	RPTFE
13	Stop	ASTM A276 Type 316
14	Stop Screw	316 Stainless Steel
15	Lock Plate	302 or 304 Stainless Steel
16	Body Seal	RPTFE
17	Grounding Spring	Stainless Steel
18	Body Joint Stud	ASTM A193 Grade B8M
19	Body Joint Nut	ASTM A194 Grade 8
20	Lockwasher	302 or 304 Stainless Steel
21	Pipe Handle	Galvanized Steel (not Shown)

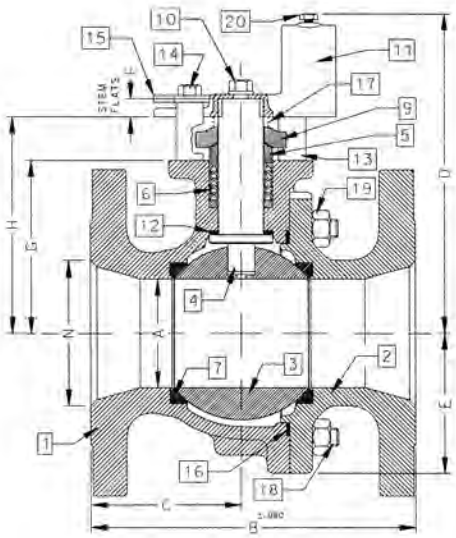

ACTUATOR MOUNTING

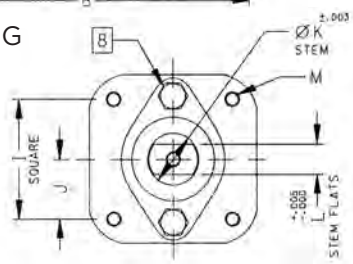

VARIATIONS AVAILABLE

- 87H - Hastelloy
- 87N - Nickel
- 87S - 304L Stainless Steel

OPTIONS AVAILABLE

(MORE INFORMATION IN SECTION J)

- Minimum quantities apply.
- To specify an option, replace the "01" standard suffix with the suffix of the option.
- To specify multiple options, replace the "01" suffix with the desired suffixes in the numerical order shown below. NOTE: Not all suffixes can be combined together.

(SUFFIX)	OPTION
-01	Standard Configuration
-14-	Side Vented Ball (Uni-Directional)
-21-	UHMWPE Seats
-24-	Graphite Packing, Spiral Wound Graphite Body Seal, RPTFE Bearing (API 607, 6th Edition, ISO 10497:2010)
-35-	PTFE Seats and Seals
-49-	No Lubrication. Assembled Dry
-57-	Oxygen Cleaned
-65-	MPTFE Seats and Graphite Packing (Fire Safe)
-67-	Cleaned for Industrial Gases
-69-	Drilled and Tapped Purge Ports with Plugs
-70-	Extended Bonnet
-73-	316 Stainless Steel Spiral Wound Gaskets with PTFE Filler
-76-	Live Loaded (Lever)
-77-	Live Loaded (Gear, Actuator)
-80-	TFM 1600 Seats, PTFE Chevron Packing, Spiral Wound PTFE Body Seal PEEK Bearing
-82-	Flat Face Flanges
-90-	Double Packed 4" Extended Bonnet
-9P-	Double Packed 4" Extended Bonnet with Monitoring Port
-CE-	CE Marking. See Page D-3 "Product Approvals" for Availability
-EF-	Graphite Packing (API 641 Compliant)
-EP-	Garlock EVSP Stem Packing with Spiral Wound Graphite Gasket (Fire Safe by Design)
-KF-	PCTFE Stem Bearing
-MG-	Gear Operator with Standard Handwheel
-MH-	Gear Operator with Standard Handwheel & Locking Device
-MJ-	Gear Operator with Oversize Handwheel
-MK-	Gear Operator with Oversize Handwheel & Locking Device
-MP-	Positive Material Identification
-TC-	With Test Certificate
-TD-	Tested to API Spec 6D
-UA-	AIS (American Iron & Steel) Compliant
-UL-	UL & CSA Listed (with Markings)
-ZP1-	Fugitive Emissions Packing (Viton)
-ZP2-	Fugitive Emissions Packing (Buna-N)
-ZP3-	Fugitive Emissions Packing (Kalrez)

Pressure/Temperature Ratings - Page M-9, Graph No. 2

DIMENSIONS

PART NO.	SIZE	A	B	C	D	E	F	G	H	I	J	K	L	M	N	WT.
87A-10A-01	4"	3.00	9.00	4.18	8.80	3.88	0.50	4.75	5.95	2.840	1.420	1.250	0.725	3/8-16	4.00	73
87A-10C-01	6"	4.00	10.50	4.69	9.99	5.13	0.50	5.94	7.13	2.840	1.420	1.250	0.725	3/8-16	6.00	117
87A-10E-01	8"	6.00	18.00	9.00	13.73	7.00	1.00	7.75	9.48	4.596	2.298	2.000	1.375	3/4-10	8.00	310

REV. 18JUL19

87A-100 SERIES

STAINLESS STEEL ASME CLASS 150 FLANGED STD. PORT BALL VALVE
10”

5 YEAR WARRANTY MADE IN USA

FOR STANDARDS COMPLIANCE AND STANDARD FEATURES REFER TO PAGE D-3.

STANDARD MATERIAL LIST

	PART	MATERIAL
1	Body	ASTM A351 CF8M
2	Retainer	ASTM A351 CF8M
3	Ball	ASTM A276 Type 316 or A351 CF8M
4	Stem	ASTM A276 Type 316
5	Packing Gland	ASTM A276 Type 316
6	Stem Seals	PTFE
7	Seats	TFM 1700
8	Gland Screws	ASTM A193 B8 Class 1
9	Gland Plate	316 Stainless Steel
10	Stem Bearing	RPTFE
11	Body Seal	RPTFE
12	Body Joint Stud	ASTM A193 Grade B8M
13	Body Joint Nut	ASTM A194 Grade 8

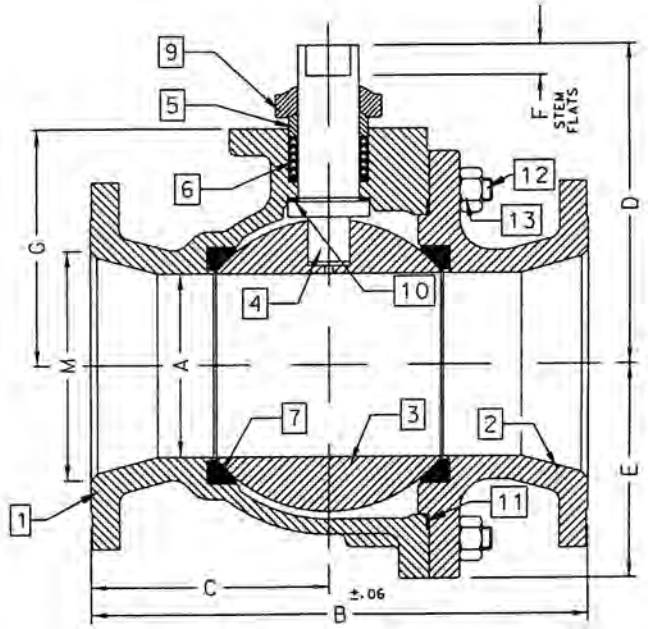

ACTUATOR MOUNTING

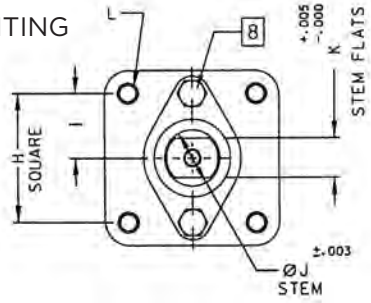

VARIATIONS AVAILABLE

- 87H - Hastelloy
- 87N - Nickel
- 87S - 304L Stainless Steel

OPTIONS AVAILABLE

(MORE INFORMATION IN SECTION J)

- Minimum quantities apply.
- To specify an option, replace the “01” standard suffix with the suffix of the option.
- To specify multiple options, replace the “01” suffix with the desired suffixes in the numerical order shown below. NOTE: Not all suffixes can be combined together.

(SUFFIX)	OPTION
-01	Standard Configuration
-14-	Side Vented Ball (Uni-Directional)
-21-	UHMWPE Seats
-24-	Graphite Packing, Spiral Wound Graphite Body Seal, RPTFE Bearing (API 607, 6th Edition, ISO 10497:2010)
-35-	PTFE Seats and Seals
-49-	No Lubrication. Assembled Dry
-57-	Oxygen Cleaned
-65-	MPTFE Seats and Graphite Packing (Fire Safe)
-69-	Drilled and Tapped Purge Port with Plugs
-70-	4” Extended Bonnet
-77-	Live Loaded 87A/88A Series (Gear, Actuator)
-80-	TFM 1600 Seats, PTFE Chevron Packing, Spiral Wound PTFE Body Seal, PEEK Bearing
-82-	Flat Face Flanges
-90-	Double Packed 4” Extended Bonnet
-9P-	Double Packed 4” Extended Bonnet with Monitoring Port
-CE-	CE Marking. See Page D-3 “Product Approvals” for Availability
-EF-	Graphite Packing (API 641 Compliant)
-EP-	Garlock EVSP Stem Packing with Spiral Wound Graphite Gasket (Fire Safe by Design)
-KF-	PCTFE Stem Bearing
-MG-	Gear Operator with Standard Handwheel
-MH-	Gear Operator with Standard Handwheel & Locking Device
-MJ-	Gear Operator with Oversize Handwheel
-MK-	Gear Operator with Oversize Handwheel & Locking Device
-MP-	Positive Material Identification
-TC-	With Test Certificate
-TD-	Tested to API Spec 6D
-UA-	AIS (American Iron & Steel) Compliant
-UL-	UL & CSA Listed (with Markings)
-ZP1-	Fugitive Emissions Packing (Viton)
-ZP2-	Fugitive Emissions Packing (Buna-N)
-ZP3-	Fugitive Emissions Packing (Kalrez)

Pressure/Temperature Ratings - Page M-9, Graph No. 2

DIMENSIONS

PART NO.	SIZE	A	B	C	D	E	F	G	H	I	J	K	L	M	WT.
87A-10G-01	10”	8.00	21.00	10.37	12.83	9.18	1.00	10.22	4.596	2.298	2.000	1.375	3/4-10	10.00	526

REV. 18JUL19

aalberts integrated piping systems

87A-200 SERIES

STAINLESS STEEL ASME CLASS 150 FLANGED FULL PORT BALL VALVE
1/2" THRU 1"

5 YEAR WARRANTY MADE IN USA

FOR STANDARDS COMPLIANCE AND STANDARD FEATURES REFER TO PAGE D-3.

STANDARD MATERIAL LIST

	PART	MATERIAL
1	Body	ASTM A351 CF8M
2	Retainer	ASTM A276 Type 316
3	Ball	ASTM A276 Type 316
4	Stem	ASTM A276 Type 316
5	Packing Gland	ASTM A276 Type 316
6	Stem Seals	PTFE
7	Seats	TFM 1700
8	Gland Screws	ASTM A193 B8 Class 1
9	Gland Plate	302 or 304 Stainless Steel
10	Stem Nut	316 Stainless Steel
11	Lever	302 or 304 with Vinyl Grip
12	Stem Bearing	RPTFE
13	Stop	ASTM A276 Type 316
14	Stop Screw	18-8 Stainless Steel
15	Lock Plate	302 or 304 Stainless Steel
16	Body Seal	RPTFE
17	Lockwasher	302 or 304 Stainless Steel
18	Grounding Spring	Stainless Steel

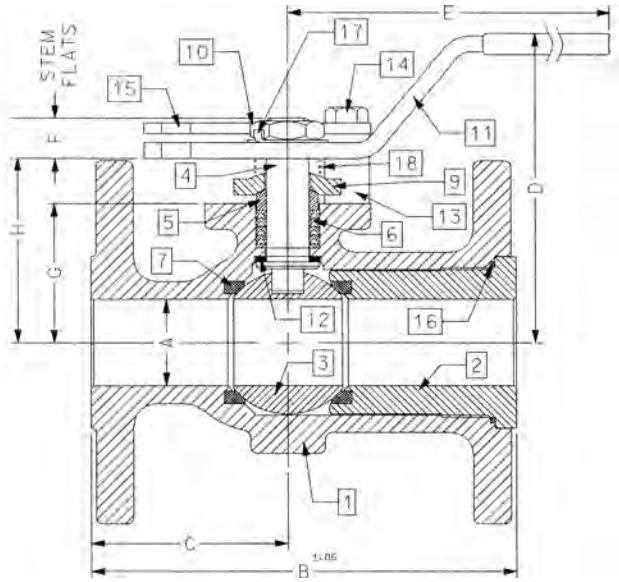

ACTUATOR MOUNTING

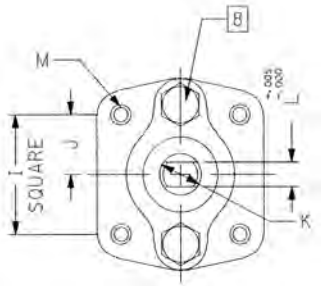

VARIATIONS AVAILABLE

- 87H - Hastelloy
- 87M - Monel
- 87N - Nickel
- 87S - 304L Stainless Steel

OPTIONS AVAILABLE

(MORE INFORMATION IN SECTION J)

- Minimum quantities apply.
- To specify an option, replace the "01" standard suffix with the suffix of the option.
- To specify multiple options, replace the "01" suffix with the desired suffixes in the numerical order shown below. NOTE: Not all suffixes can be combined together.

(SUFFIX)	OPTION
-01	Standard Configuration
-04-	2-1/4" Stem Extension (Carbon Steel, Zinc Plated)
-14-	Side Vented Ball (Uni-Directional)
-15-	Wheel Handle, Steel
-21-	UHMWPE Seats
-24-	Graphite Packing, Spiral Wound Graphite Body Seal, RPTFE Bearing (API 607, 6th Edition, ISO 10497:2010)
-35-	PTFE Seats and Seals
-38-	PEEK Seats and Graphite Packing
-49-	No Lubrication. Assembled Dry
-57-	Oxygen Cleaned
-65-	MPTFE Seats and Graphite Packing (Fire Safe)
-69-	Drilled and Tapped Purge Port with Plugs
-70-	4" Extended Bonnet
-73-	316 Stainless Steel Spiral Wound Gaskets with PTFE Filler
-76-	Live Loaded (Lever)
-77-	Live Loaded (Gear, Actuator)
-80-	TFM 1600 Seats, PTFE Chevron Packing, Spiral Wound PTFE Body Seal, PEEK Bearing
-82-	Flat Face Flanges
-90-	Double Packed 4" Extended Bonnet
-9P-	Double Packed 4" Extended Bonnet with Monitoring Port
-CE-	CE Marking. See Page D-3 "Product Approvals" for Availability
-EF-	Graphite Packing (API 641 Compliant) (Not Available on 1/2" Size)
-EP-	Garlock EVSP Stem Packing with Spiral Wound Graphite Gasket (Fire Safe by Design)
-KF-	PCTFE Stem Bearing
-MP-	Positive Material Identification
-TC-	With Test Certificate
-TD-	Tested to API Spec 6D
-UA-	AIS (American Iron & Steel) Compliant
-UL-	UL & CSA Listed (with Markings)
-ZP1-	Fugitive Emissions Packing (Viton)
-ZP2-	Fugitive Emissions Packing (Buna-N)
-ZP3-	Fugitive Emissions Packing (Kalrez)

Pressure/Temperature Ratings - Page M-9, Graph No. 2

DIMENSIONS

PART NO.	SIZE	A	B	C	D	E	F	G	H	I	J	K	L	M	WT.
87A-203-01A	1/2"	0.50	4.25	2.06	2.74	5.12	0.24	1.09	1.44	1.00	0.500	0.375	0.245	10-24	5
87A-204-01A	3/4"	0.75	4.62	2.18	3.43	5.54	0.22	1.65	2.13	1.392	0.696	0.500	0.312	1/4-20	6
87A-205-01	1"	1.00	5.00	2.32	4.62	6.53	0.47	1.62	2.15	1.392	0.696	0.500	0.287	1/4-20	7

REV. 10SEP19

87A-200 SERIES

STAINLESS STEEL ASME CLASS 150 FLANGED FULL PORT BALL VALVE
1-1/2" THRU 2-1/2"

5 YR WARRANTY MADE IN USA

FOR STANDARDS COMPLIANCE AND STANDARD FEATURES REFER TO PAGE D-3.

STANDARD MATERIAL LIST

	PART	MATERIAL
1	Body	ASTM A351 CF8M
2	Retainer	ASTM A351 CF8M
3	Ball	ASTM A276 Type 316 or A351 CF8M
4	Stem	ASTM A276 Type 316
5	Packing Gland	ASTM A276 Type 316
6	Stem Seals	PTFE
7	Seats	TFM 1700
8	Gland Screws	ASTM A193 B8 Class 1
9	Gland Plate	316 Stainless Steel
10	Adapter Screw	18-8 Stainless Steel
11	Lever	316 Stainless Steel
12	Stem Bearing	RPTFE
13	Stop	ASTM A276 Type 316
14	Stop Screw	316 Stainless Steel
15	Lock Plate	302 or 304 Stainless Steel
16	Body Seal	RPTFE
17	Grounding Spring	Stainless Steel
18	Body Joint Stud	ASTM A193 Grade B8M
19	Body Joint Nut	ASTM A194 Grade 8
20	Lockwasher	302 or 304 Stainless Steel

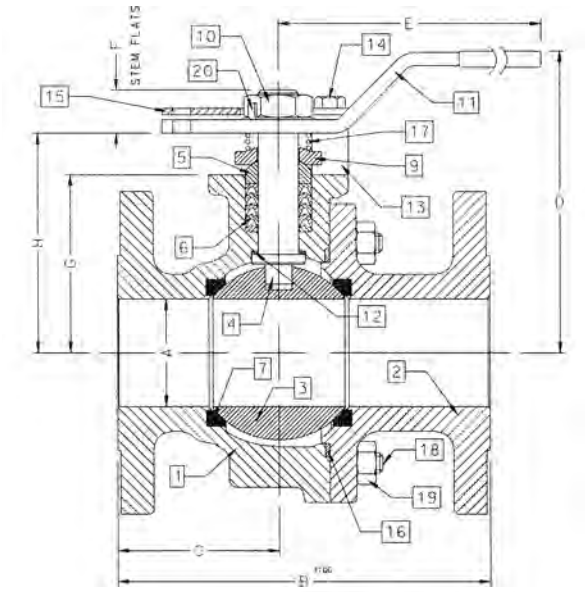

ACTUATOR MOUNTING

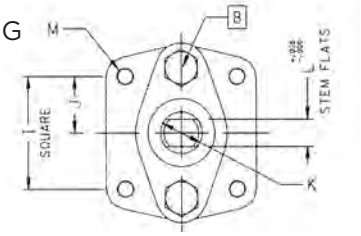

VARIATIONS AVAILABLE

- 87H - Hastelloy
- 87M - Monel
- 87N - Nickel
- 87S - 304L Stainless Steel

OPTIONS AVAILABLE

(MORE INFORMATION IN SECTION J)

- Minimum quantities apply.
- To specify an option, replace the "01" standard suffix with the suffix of the option.
- To specify multiple options, replace the "01" suffix with the desired suffixes in the numerical order shown below. NOTE: Not all suffixes can be combined together.

(SUFFIX)	OPTION
-01	Standard Configuration
-04-	2-1/4" Stem Extension (Carbon Steel, Zinc Plated) (up to 2-1/2")
-14-	Side Vented Ball (Uni-Directional)
-21-	UHMWPE Seats
-24-	Graphite Packing, Spiral Wound Graphite Body Seal, RPTFE Bearing (API 607, 6th Edition, ISO 10497:2010)
-35-	PTFE Seats and Seals
-38-	PEEK Seats and Graphite Packing
-49-	No Lubrication. Assembled Dry
-57-	Oxygen Cleaned
-65-	MPTFE Seats and Graphite Packing (Fire Safe)
-69-	Drilled and Tapped Purge Ports with Plugs
-70-	4" Extended Bonnet
-73-	316 Stainless Steel Spiral Wound Gaskets with PTFE Filler
-76-	Live Loaded (Lever)
-77-	Live Loaded (Gear, Actuator)
-80-	TFM 1600 Seats, PTFE Chevron Packing, Spiral Wound PTFE Body Seal, PEEK Bearing
-82-	Flat Face Flanges
-MG-	Gear Operator with Standard Handwheel
-90-	Double Packed 4" Extended Bonnet
-9P-	Double Packed 4" Extended Bonnet with Monitoring Port
-CE-	CE Marking. See Page D-3 "Product Approvals" for Availability
-EF-	Graphite Packing (API 641 Compliant)
-EP-	Garlock EVSP Stem Packing with Spiral Wound Graphite Gasket (Fire Safe by Design)
-KF-	PCTFE Stem Bearing
-MH-	Gear Operator with Standard Handwheel & Locking Device
-MJ-	Gear Operator with Oversize Handwheel
-MK-	Gear Operator with Oversize Handwheel & Locking Device
-MP-	Positive Material Identification
-TC-	With Test Certificate
-TD-	Tested to API Spec 6D
-UA-	AIS (American Iron & Steel) Compliant
-UL-	UL & CSA Listed (with Markings)
-ZP1-	Fugitive Emissions Packing (Viton)
-ZP2-	Fugitive Emissions Packing (Buna-N)
-ZP3-	Fugitive Emissions Packing (Kalrez)

Pressure/Temperature Ratings - Page M-9, Graph No. 2

DIMENSIONS

PART NO.	SIZE	A	B	C	D	E	F	G	H	I	J	K	L	M	WT.
87A-207-01	1-1/2"	1.50	6.50	3.00	4.62	6.65	0.72	2.41	3.09	1.949	0.974	0.625	0.412	5/16-18	14
87A-208-01	2"	2.00	7.00	3.04	5.61	8.41	0.80	3.31	4.08	1.949	0.974	0.750	0.477	5/16-18	25
87A-209-01	2-1/2"	2.50	7.50	3.34	6.24	8.41	0.80	3.94	4.71	1.949	0.974	0.750	0.477	5/16-18	30

REV. 18JUL19

aalberts integrated piping systems

87A-200 SERIES

STAINLESS STEEL ASME CLASS 150 FLANGED FULL PORT BALL VALVE
3" THRU 6"

5 YEAR WARRANTY MADE IN USA

FOR STANDARDS COMPLIANCE AND STANDARD FEATURES REFER TO PAGE D-3.

STANDARD MATERIAL LIST

	PART	MATERIAL
1	Body	ASTM A351 CF8M
2	Retainer	ASTM A351 CF8M
3	Ball	ASTM A276 Type 316 or A351 CF8M
4	Stem	ASTM A276 Type 316
5	Packing Gland	ASTM A276 Type 316
6	Stem Seals	PTFE
7	Seats	TFM 1700
8	Gland Screws	ASTM A193 B8 Class 1
9	Gland Plate	316 Stainless Steel
10	Adapter Screw	18-8 Stainless Steel
11	Handle Adapter	316 with Vinyl Grip
12	Stem Bearing	RPTFE
13	Stop	ASTM A276 Type 316
14	Stop Screw	316 Stainless Steel
15	Lock Plate	302 or 304 Stainless Steel
16	Body Seal	RPTFE
17	Grounding Spring	Stainless Steel
18	Body Joint Stud	ASTM A193 Grade B8M
19	Body Joint Nut	ASTM A194 Grade 8
20	Pipe Handle	Galvanized Steel (not shown)

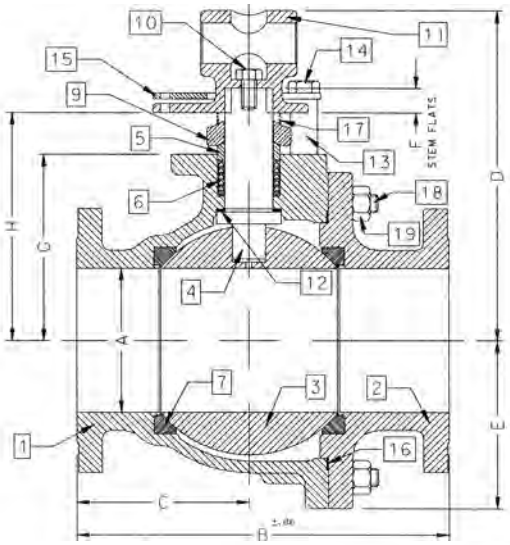

ACTUATOR MOUNTING

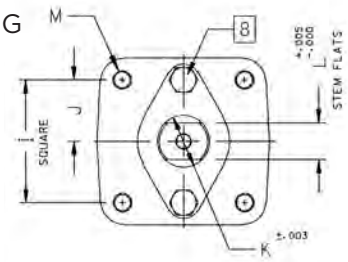

VARIATIONS AVAILABLE

- 87H - Hastelloy
- 87N - Nickel
- 87S - 304L Stainless Steel

OPTIONS AVAILABLE

(MORE INFORMATION IN SECTION J)

- Minimum quantities apply.
- To specify an option, replace the "01" standard suffix with the suffix of the option
- To specify multiple options, replace the "01" suffix with the desired suffixes in the numerical order shown below. NOTE: Not all suffixes can be combined together.

(SUFFIX)	OPTION
-01	Standard Configuration
-14-	Side Vented Ball (Uni-Directional)
-21-	UHMWPE Seats
-24-	Graphite Packing, Spiral Wound Graphite Body Seal, RPTFE Bearing (API 607, 6th Edition, ISO 10497:2010)
-35-	PTFE Seats and Seals
-38-	PEEK Seatsand Graphite Packing
-49-	No Lubrication. Assembled Dry
-57-	Oxygen Cleaned
-65-	MPTFESeats and Graphite Packing (Fire Safe)
-69-	Drilled and Tapped Purge Ports with Plugs
-70-	4" Extended Bonnet
-73-	316Stainless Steel Spiral Wound Gaskets with PTFE Filler
-76-	Live Loaded (Lever)
-77-	Live Loaded (Gear,Actuator)
-80-	TFM 1600 Seats, PTFE Chevron Packing, Spiral Wound PTFE Body Seal, PEEK Bearing
-82-	Flat Face Flanges
-90-	Double Packed 4" Extended Bonnet
-9P-	Double Packed 4" Extended Bonnet with Monitoring Port
-CE-	CE Marking. See Page D-3 "Product Approvals" for Availability
-EF-	Graphite Packing (API 641 Compliant)
-EP-	Garlock EVSP Stem Packing with Spiral Wound Graphite Gasket (Fire Safe by Design)
-KF-	PCTFE Stem Bearing
-MG-	Gear Operator with Standard Handwheel
-MH-	Gear Operator with Standard Handwheel& Locking Device
-MJ-	Gear Operator with Oversize Handwheel
-MK-	Gear Operator with Oversize Handwheel & LockingDevice
-MP-	Positive Material Identification
-TC-	With Test Certificate
-TD-	Tested to API Spec 6D
-UA-	AIS (American Iron & Steel) Compliant
-UL-	UL & CSA Listed (with Markings)
-ZP1-	Fugitive Emissions Packing (Viton)
-ZP2-	Fugitive Emissions Packing (Buna-N)
-ZP3-	Fugitive Emissions Packing (Kalrez)

Pressure/Temperature Ratings - Page M-9, Graph No. 2

DIMENSIONS

PART NO.	SIZE	A	B	C	D	E	F	G	H	I	J	K	L	M	WT.
87A-200-01	3"	3.00	8.00	3.68	8.80	3.88	0.50	4.75	5.95	2.840	1.420	1.250	0.725	3/8-16	60
87A-20A-01	4"	4.00	9.00	3.94	9.99	5.13	0.50	5.94	7.13	2.840	1.420	1.250	0.725	3/8-16	91
87A-20C-01	6"	6.00	15.50	7.19	13.73	7.00	1.00	7.75	9.48	4.596	2.298	2.000	1.375	3/4-10	248

REV. 18JUL19

87A-200 SERIES

STAINLESS STEEL ASME CLASS 150 FLANGED FULL PORT BALL VALVE
8" THRU 12"

5 YEAR WARRANTY MADE IN USA

FOR STANDARDS COMPLIANCE AND STANDARD FEATURES REFER TO PAGE D-3.

STANDARD MATERIAL LIST

	PART	MATERIAL
1	Body	ASTM A351 CF8M
2	Retainer	ASTM A351 CF8M
3	Ball	ASTM A276 Type 316 or A351 CF8M
4	Stem	ASTM A276 Type 316
5	Packing Gland	ASTM A276 Type 316
6	Stem Seals	PTFE
7	Seats	TFM 1700
8	Gland Screws	ASTM A193 B8 Class 1
9	Gland Plate	316 Stainless Steel
10	Stem Bearing	RPTFE
11	Body Seal	RPTFE
12	Body Joint Stud	ASTM A193 Grade B8M
13	Body Joint Nut	ASTM A194 Grade 8

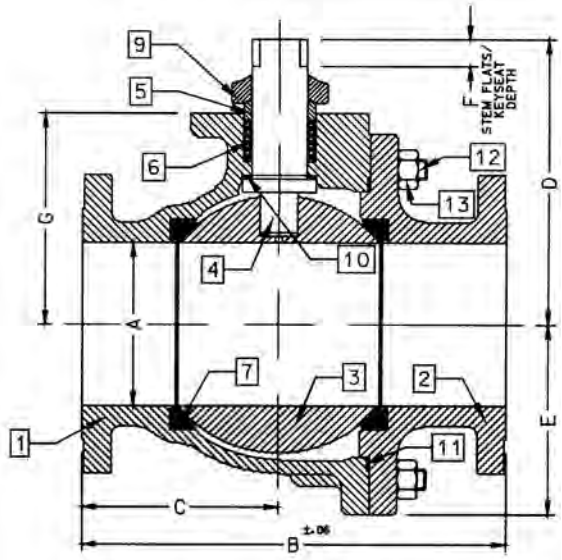

ACTUATOR MOUNTING

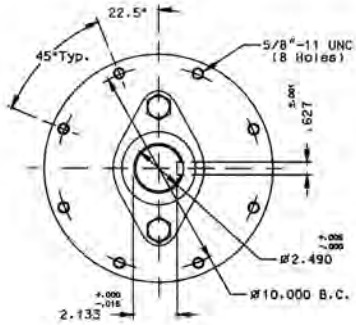

10" & 12"

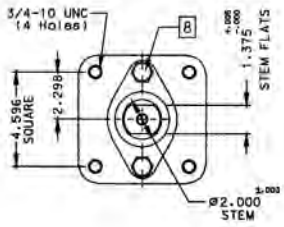

8"

VARIATIONS AVAILABLE

- 87H - Hastelloy
- 87N - Nickel
- 87S - 304L Stainless Steel

OPTIONS AVAILABLE

(MORE INFORMATION IN SECTION J)

- Minimum quantities apply.
- To specify an option, replace the "01" standard suffix with the suffix of the option.
- To specify multiple options, replace the "01" suffix with the desired suffixes in the numerical order shown below. NOTE: Not all suffixes can be combined together.

(SUFFIX)	OPTION
-01	Standard Configuration
-14-	Side Vented Ball (Uni-Directional)
-21-	UHMWPE Seats
-24-	Graphite Packing, Spiral Wound Graphite Body Seal, RPTFE Bearing (API 607, 6th Edition, ISO 10497:2010)
-35-	PTFE Seats and Seals
-49-	No Lubrication. Assembled Dry
-57-	Oxygen Cleaned
-65-	MPTFE Seats and Graphite Packing (Fire Safe)
-69-	Drilled and Tapped Purge Ports with Plugs
-70-	4" Extended Bonnet (8" Only)
-77-	Live Loaded (Gear, Actuator)
-80-	TFM 1600 Seats, PTFE Chevron Packing, Spiral Wound PTFE Body Seal, PEEK Bearing
-82-	Flat Face Flanges
-90-	Double Packed 4" Extended Bonnet
-9P-	Double Packed 4" Extended Bonnet with Monitoring Port
-CE-	CE Marking. See Page D-3 "Product Approvals" for Availability
-EF-	Graphite Packing (API 641 Compliant)
-EP-	Garlock EVSP Stem Packing with Spiral Wound Graphite Gasket (Fire Safe by Design)
-KF-	PCTFE Stem Bearing
-MG-	Gear Operator with Standard Handwheel
-MH-	Gear Operator with Standard Handwheel & Locking Device
-MJ-	Gear Operator with Oversize Handwheel
-MK-	Gear Operator with Oversize Handwheel & Locking Device
-MP-	Positive Material Identification
-TC-	With Test Certificate
-TD-	Tested to API Spec 6D
-UA-	AIS (American Iron & Steel) Compliant
-UL-	UL & CSA Listed (with Markings)
-ZP1-	Fugitive Emissions Packing (Viton)
-ZP2-	Fugitive Emissions Packing (Buna-N)
-ZP3-	Fugitive Emissions Packing (Kalrez)

Pressure/Temperature Ratings - Page M-9, Graph No. 2

DIMENSIONS

PART NO.	SIZE	A	B	C	D	E	F	G
87A-20E-01	8"	8.00	18.00	8.88	12.83	9.18	1.00	10.22
87A-20G-01	10"	10.00	21.00	10.26	18.57	11.33	2.31	12.80
87A-20H-01	12"	12.00	24.00	12.09	20.31	13.40	2.31	14.92

REV. 18JUL19

aalberts integrated piping systems

87A-700 SERIES

STAINLESS STEEL ASME CLASS 300 FLANGED STD. PORT BALL VALVE
1-1/2" THRU 2"

5 YEAR WARRANTY MADE IN USA

FOR STANDARDS COMPLIANCE AND STANDARD FEATURES REFER TO PAGE D-3.

STANDARD MATERIAL LIST

	PART	MATERIAL
1	Body	ASTM A351 CF8M
2	Retainer	ASTM A276 Type 316
3	Ball	ASTM A276 Type 316
4	Stem	ASTM A276 Type 316
5	Packing Gland	ASTM A276 Type 316
6	Stem Seals	PTFE
7	Seats	TFM 1700
8	Gland Screws	ASTM A193 B8 Class 1
9	Gland Plate	302 & 304 Stainless Steel
10	Stem Nut	316 Stainless Steel
11	Lever	302 & 304 Stainless Steel with Vinyl Grip
12	Stem Bearing	RPTFE
13	Stop	ASTM A276 Type 316
14	Stop Screw	18-8 Stainless Steel
15	Lock Plate	302 or 304 Stainless Steel
16	Body Seal	RPTFE
17	Lockwasher	302 or 304 Stainless Steel
18	Grounding Spring	Stainless Steel

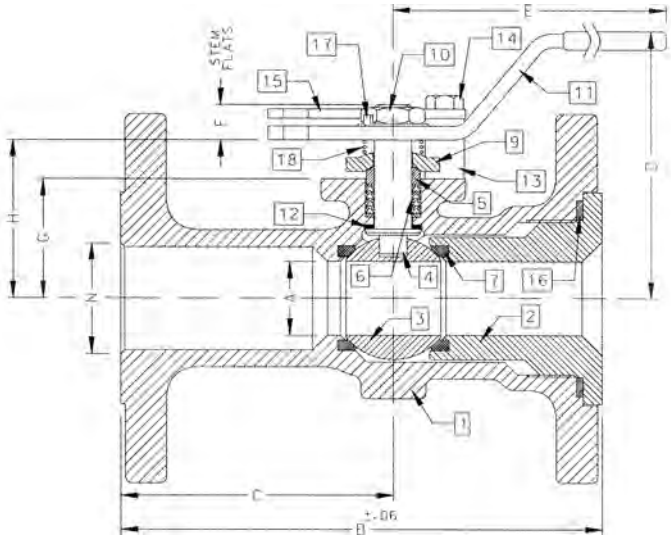

ACTUATOR MOUNTING

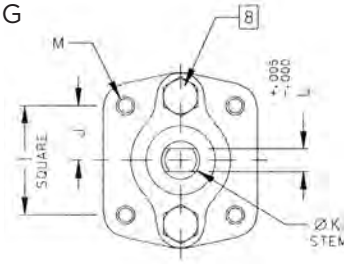

VARIATIONS AVAILABLE

- 87H - Hastelloy
- 87M - Monel
- 87N - Nickel
- 87S - 304L Stainless Steel

OPTIONS AVAILABLE

(MORE INFORMATION IN SECTION J)

- Minimum quantities apply.
- To specify an option, replace the "01" standard suffix with the suffix of the option.
- To specify multiple options, replace the "01" suffix with the desired suffixes in the numerical order shown below. NOTE: Not all suffixes can be combined together.

(SUFFIX)	OPTION
-01	Standard Configuration
-04-	2-1/4" Stem Extension (Carbon Steel, Zinc Plated)
-14-	Side Vented Ball (See Page J-2)
-15-	Wheel Handle, Steel
-21-	UHMWPE Seats
-24-	Graphite Packing, Spiral Wound Graphite Body Seal, RPTFE Bearing (API 607, 6th Edition, ISO 10497:2010)
-35-	PTFE Seats and Seals
-38-	PEEK Seats and Graphite Packing
-49-	No Lubrication. Assembled Dry
-57-	Oxygen Cleaned
-65-	MPTFE Seats and Graphite Packing (Fire Safe)
-69-	Drilled and Tapped Purge Ports with Plugs
-70-	4" Extended Bonnet
-73-	316 Stainless Steel Spiral Wound Gaskets with PTFE Filler
-76-	Live Loaded (Lever)
-77-	Live Loaded (Gear, Actuator)
-80-	TFM 1600 Seats, PTFE Chevron Packing, Spiral Wound PTFE Body Seal, PEEK Bearing
-82-	Flat Face Flanges
-90-	Double Packed 4" Extended Bonnet
-9P-	Double Packed 4" Extended Bonnet with Monitoring Port
-CE-	CE Marking. See Page D-3 "Product Approvals" for Availability
-EF-	Graphite Packing (API 641 Compliant)
-EP-	Garlock EVSP Stem Packing with Spiral Wound Graphite Gasket (Fire Safe by Design)
-KF-	PCTFE Stem Bearing
-MP-	Positive Material Identification
-TC-	With Test Certificate
-TD-	Tested to API Spec 6D
-UA-	AIS (American Iron & Steel) Compliant
-UL-	UL & CSA Listed (with Markings)
-ZP1-	Fugitive Emissions Packing (Viton)
-ZP2-	Fugitive Emissions Packing (Buna-N)
-ZP3-	Fugitive Emissions Packing (Kalrez)

Pressure/Temperature Ratings - Page M-11, Graph No. 6

DIMENSIONS

PART NO.	SIZE	A	B	C	D	E	F	G	H	I	J	K	L	M	N	WT.
87A-707-01A	1-1/2"	1.25	7.50	4.50	4.85	6.53	0.47	1.85	2.38	1.392	0.696	0.500	0.287	1/4-20	1.50	15.7
87A-708-01	2"	1.50	8.50	5.19	4.62	6.65	0.72	2.41	3.09	1.949	0.974	0.625	0.412	5/16-18	2.00	24.0

REV. 18JUL19

87A-700 SERIES

STAINLESS STEEL ASME CLASS 300 FLANGED STD. PORT BALL VALVE
2-1/2" THRU 3"

5 YEAR WARRANTY MADE IN USA

FOR STANDARDS COMPLIANCE AND STANDARD FEATURES REFER TO PAGE D-3.

STANDARD MATERIAL LIST

	PART	MATERIAL
1	Body	ASTM A351 CF8M
2	Retainer	ASTM A351 CF8M
3	Ball	ASTM A276 Type 316 or A351 CF8M
4	Stem	ASTM A276 Type 316
5	Packing Gland	ASTM A276 Type 316
6	Stem Seals	PTFE
7	Seats	TFM 1700
8	Gland Screws	ASTM A193 B8 Class 1
9	Gland Plate	316 Stainless Steel
10	Stem Nut	18-8 Stainless Steel
11	Lever	316 with Vinyl Grip
12	Stem Bearing	RPTFE
13	Stop	ASTM A276 Type 316
14	Stop Screw	316 Stainless Steel
15	Lock Plate	302 or 304 Stainless Steel
16	Body Seal	RPTFE
17	Grounding Spring	Stainless Steel
18	Body Joint Stud	ASTM A193 Grade B8M
19	Body Joint Nut	ASTM A194 Grade 8
20	Lockwasher	302 or 304 Stainless Steel

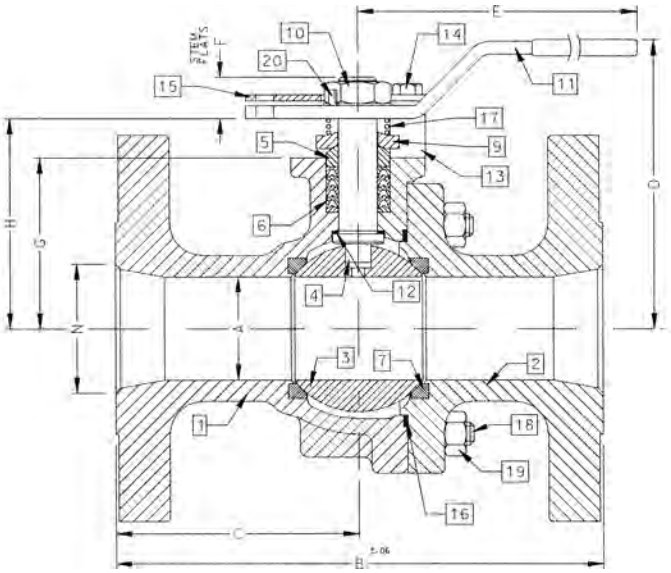

ACTUATOR MOUNTING

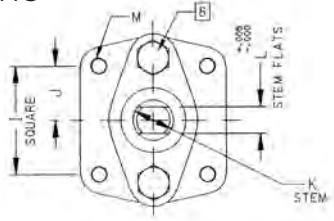

VARIATIONS AVAILABLE

- 87H - Hastelloy
- 87N - Nickel
- 87S - 304L Stainless Steel

OPTIONS AVAILABLE

(MORE INFORMATION IN SECTION J)

- Minimum quantities apply.
- To specify an option, replace the "01" standard suffix with the suffix of the option.
- To specify multiple options, replace the "01" suffix with the desired suffixes in the numerical order shown below. NOTE: Not all suffixes can be combined together.

(SUFFIX)	OPTION
-01	Standard Configuration
-04-	2-1/4" Stem Extension (Carbon Steel, Zinc Plated) (2-1/2" only)
-14-	Side Vented Ball (Uni-Directional)
-21-	UHMWPE Seats
-24-	Graphite Packing, Spiral Wound Graphite Body Seal, RPTFE Bearing (API 607, 6th Edition, ISO 10497:2010)
-35-	PTFE Seats and Seals
-38-	PEEK Seats and Graphite Packing
-49-	No Lubrication. Assembled Dry
-57-	Oxygen Cleaned
-65-	MPTFE Seats and Graphite Packing (Fire Safe)
-69-	Drilled and Tapped Purge Ports with Plugs
-70-	4" Extended Bonnet
-73-	316 Stainless Steel Spiral Wound Gaskets with PTFE Filler
-76-	Live Loaded (Lever)
-77-	Live Loaded (Gear, Actuator)
-80-	TFM 1600 Seats, PTFE Chevron Packing, Spiral Wound PTFE Body Seal, PEEK Bearing
-82-	Flat Face Flanges
-90-	Double Packed 4" Extended Bonnet
-9P-	Double Packed 4" Extended Bonnet with Monitoring Port
-CE-	CE Marking. See Page D-3 "Product Approvals" for Availability
-EF-	Graphite Packing (API 641 Compliant)
-EP-	Garlock EVSP Stem Packing with Spiral Wound Graphite Gasket (Fire Safe by Design)
-KF-	PCTFE Stem Bearing
-MG-	Gear Operator with Standard Handwheel
-MH-	Gear Operator with Standard Handwheel & Locking Device
-MJ-	Gear Operator with Oversize Handwheel
-MK-	Gear Operator with Oversize Handwheel & Locking Device
-MP-	Positive Material Identification
-TC-	With Test Certificate
-TD-	Tested to API Spec 6D
-UA-	AIS (American Iron & Steel) Compliant
-UL-	UL & CSA Listed (with Markings)
-ZP1-	Fugitive Emissions Packing (Viton)
-ZP2-	Fugitive Emissions Packing (Buna-N)
-ZP3-	Fugitive Emissions Packing (Kalrez)

Pressure/Temperature Ratings - Page M-11, Graph No. 6

DIMENSIONS

PART NO.	SIZE	A	B	C	D	E	F	G	H	I	J	K	L	M	N	WT.
87A-709-01	2-1/2"	2.00	9.50	4.75	5.61	8.41	0.80	3.31	4.08	1.949	0.974	0.750	0.477	5/16-18	2.50	39
87A-700-01	3"	2.50	11.12	5.56	6.24	8.41	0.80	3.94	4.71	1.949	0.974	0.750	0.477	5/16-18	3.00	55

REV. 18JUL19

aalberts integrated piping systems

87A-700 SERIES

STAINLESS STEEL ASME CLASS 300 FLANGED STD. PORT BALL VALVE
4" THRU 8"

5 YEAR WARRANTY MADE IN USA

FOR STANDARDS COMPLIANCE AND STANDARD FEATURES REFER TO PAGE D-3.

STANDARD MATERIAL LIST

	PART	MATERIAL
1	Body	ASTM A351 CF8M
2	Retainer	ASTM A276 Type 316
3	Ball	ASTM A276 Type 316 or A351 CF8M
4	Stem	ASTM A276 Type 316
5	Packing Gland	ASTM A276 Type 316
6	Stem Seals	PTFE
7	Seats	TFM 1700
8	Gland Screws	ASTM A193 B8 Class 1
9	Gland Plate	316 Stainless Steel
10	Adapter Screw	18-8 Stainless Steel
11	Handle Adapter	316 Stainless Steel
12	Stem Bearing	RPTFE
13	Stop	ASTM A276 Type 316
14	Stop Screw	316 Stainless Steel
15	Lock Plate	302 or 304 Stainless Steel
16	Body Seal	RPTFE
17	Grounding Spring	Stainless Steel
18	Body Joint Stud	ASTM A193 Grade B8M
19	Body Joint Nut	ASTM A194 Grade 8
20	Adapter Screw	18-8 Stainless Steel
21	Pipe Handle	Galvanized Steel (not shown)

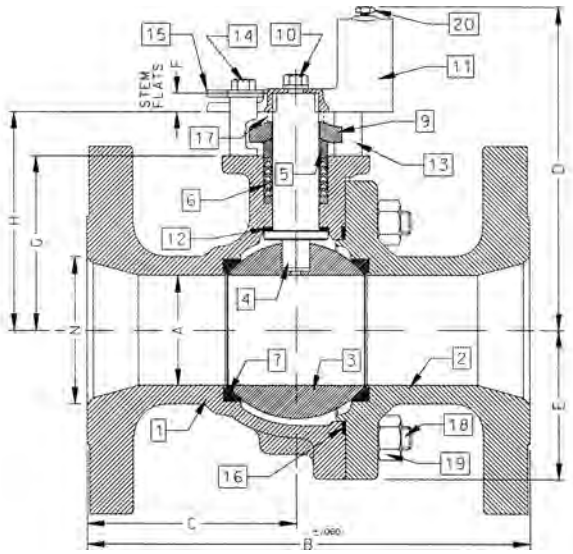

ACTUATOR MOUNTING

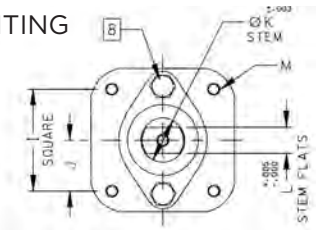

VARIATIONS AVAILABLE

- 87H - Hastelloy
- 87N - Nickel
- 87S - 304L Stainless Steel

OPTIONS AVAILABLE

(MORE INFORMATION IN SECTION J)

- Minimum quantities apply.
- To specify an option, replace the "01" standard suffix with the suffix of the option.
- To specify multiple options, replace the "01" suffix with the desired suffixes in the numerical order shown below. NOTE: Not all suffixes can be combined together.

(SUFFIX)	OPTION
-01	Standard Configuration
-14-	Side Vented Ball (Uni-Directional)
-21-	UHMWPE Seats
-24-	Graphite Packing, Spiral Wound Graphite Body Seal, RPTFE Bearing (API 607, 6th Edition, ISO 10497:2010)
-35-	PTFE Seats and Seals
-49-	No Lubrication. Assembled Dry
-57-	Oxygen Cleaned
-65-	MPTFE Seats and Graphite Packing (Fire Safe)
-69-	Drilled and Tapped Purge Ports with Plugs
-70-	4" Extended Bonnet
-73-	316 Stainless Steel Spiral Wound Gaskets with PTFE Filler
-76-	Live Loaded (Lever)
-77-	Live Loaded (Gear, Actuator)
-80-	TFM 1600 Seats, PTFE Chevron Packing, Spiral Wound PTFE Body Seal, PEEK Bearing
-82-	Flat Face Flanges
-90-	Double Packed 4" Extended Bonnet
-9P-	Double Packed 4" Extended Bonnet with Monitoring Port
-CE-	CE Marking. See Page D-3 "Product Approvals" for Availability
-EF-	Graphite Packing (API 641 Compliant)
-EP-	Garlock EVSP Stem Packing with Spiral Wound Graphite Gasket (Fire Safe by Design)
-KF-	PCTFE Stem Bearing
-MG-	Gear Operator with Standard Handwheel
-MH-	Gear Operator with Standard Handwheel & Locking Device
-MJ-	Gear Operator with Oversize Handwheel
-MK-	Gear Operator with Oversize Handwheel & Locking Device
-MP-	Positive Material Identification
-TC-	With Test Certificate
-TD-	Tested to API Spec 6D
-UA-	AIS (American Iron & Steel) Compliant
-UL-	UL & CSA Listed (with Markings)
-ZP1-	Fugitive Emissions Packing (Viton)
-ZP2-	Fugitive Emissions Packing (Buna-N)
-ZP3-	Fugitive Emissions Packing (Kalrez)

Pressure/Temperature Ratings - Page M-11, Graph No. 6

DIMENSIONS

PART NO.	SIZE	A	B	C	D	E	F	G	H	I	J	K	L	M	N	WT.
87A-70A-01	4"	3.00	12.00	5.68	8.80	4.06	0.50	4.75	5.95	2.840	1.420	1.250	0.725	3/8-16	4.00	95
87A-70C-01	6"	4.00	15.88	7.38	9.99	5.25	0.50	5.94	7.13	2.840	1.420	1.250	0.725	3/8-16	6.00	187
87A-70E-01	8"	6.00	19.75	9.00	13.73	7.30	1.00	7.75	9.48	4.596	2.298	2.000	1.375	3/4-10	8.00	400

REV. 18JUL19

87A-700 SERIES

STAINLESS STEEL ASME CLASS 300 FLANGED STD. PORT BALL VALVE
10"

5 YEAR WARRANTY MADE IN USA

FOR STANDARDS COMPLIANCE AND STANDARD FEATURES REFER TO PAGE D-3.

STANDARD MATERIAL LIST

	PART	MATERIAL
1	Body	ASTM A351 CF8M
2	Retainer	ASTM A351 CF8M
3	Ball	ASTM A276 Type 316 or A351 CF8M
4	Stem	ASTM A276 Type 316
5	Packing Gland	ASTM A276 Type 316
6	Stem Seals	PTFE
7	Seats	TFM 1700
8	Gland Screws	ASTM A193 B8 Class 1
9	Gland Plate	316 Stainless Steel
10	Stem Bearing	RPTFE
11	Body Seal	RPTFE
12	Body Joint Stud	ASTM A193 Grade B8M
13	Body Joint Nut	ASTM A194 Grade 8

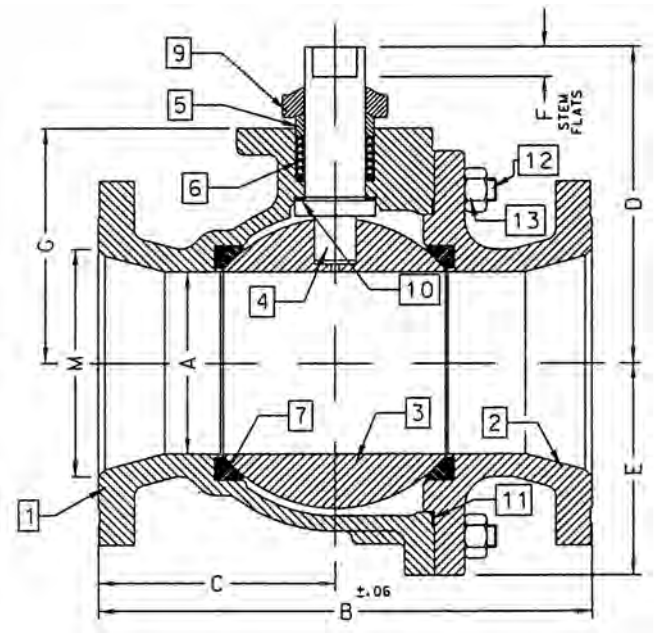

ACTUATOR MOUNTING

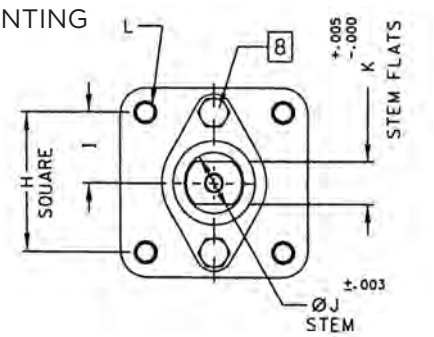

VARIATIONS AVAILABLE

- 87H - Hastelloy
- 87N - Nickel
- 87S - 304L Stainless Steel

OPTIONS AVAILABLE

(MORE INFORMATION IN SECTION J)

- Minimum quantities apply.
- To specify an option, replace the "01" standard suffix with the suffix of the option.
- To specify multiple options, replace the "01" suffix with the desired suffixes in the numerical order shown below. NOTE: Not all suffixes can be combined together.

(SUFFIX)	OPTION
-01	Standard Configuration (Less Gear Operator)
-14-	Side Vented Ball (See Page J2)
-21-	UHMWPE Seats
-24-	Graphite Packing, Spiral Wound Graphite Body Seal, RPTFE Bearing (API 607, 6th Edition, ISO 10497:2010)
-35-	PTFE Seats and Seals
-49-	No Lubrication. Assembled Dry
-57-	Oxygen Cleaned
-65-	MPTFE Seats and Graphite Packing (Fire Safe)
-69-	Drilled and Tapped Purge Ports with Plugs
-70-	4" Extended Bonnet
-77-	Live Loaded 87A/88A Series (Gear, Actuator)
-80-	TFM 1600 Seats, PTFE Chevron Packing, Spiral Wound PTFE Body Seal PEEK Bearing
-82-	Flat Face Flanges
-90-	Double Packed 4" Extended Bonnet
-9P-	Double Packed 4" Extended Bonnet with Monitoring Port
-CE-	CE Marking. See Page D-3 "Product Approvals" for Availability
-EF-	Graphite Packing (API 641 Compliant)
-EP-	Garlock EVSP Stem Packing with Spiral Wound Graphite Gasket (Fire Safe by Design)
-KF-	PCTFE Stem Bearing
-MG-	Gear Operator with Standard Handwheel
-MH-	Gear Operator with Standard Handwheel & Locking Device
-MJ-	Gear Operator with Oversize Handwheel
-MK-	Gear Operator with Oversize Handwheel & Locking Device
-MP-	Positive Material Identification
-TC-	With Test Certificate
-TD-	Tested to API Spec 6D
-UA-	AIS (American Iron & Steel) Compliant
-UL-	UL & CSA Listed (with Markings)
-ZP1-	Fugitive Emissions Packing (Viton)
-ZP2-	Fugitive Emissions Packing (Buna-N)
-ZP3-	Fugitive Emissions Packing (Kalrez)

Pressure/Temperature Ratings - Page M-11, Graph No. 6

DIMENSIONS

PART NO.	SIZE	A	B	C	D	E	F	G	H	I	J	K	L	M
87A-70G-01	10"	8.00	22.38	10.69	12.83	9.56	1.00	10.22	4.596	2.298	2.000	1.375	3/4-10	10.00

REV. 18JUL19

aalberts integrated piping systems

87A-900 SERIES

STAINLESS STEEL ASME CLASS 300 FLANGED FULL PORT BALL VALVE
1/2" THRU 1"

5 YEAR WARRANTY MADE IN USA

FOR STANDARDS COMPLIANCE AND STANDARD FEATURES REFER TO PAGE D-3.

STANDARD MATERIAL LIST

	PART	MATERIAL
1	Body	ASTM A351 CF8M
2	Retainer	ASTM A276 Type 316
3	Ball	ASTM A276 Type 316
4	Stem	ASTM A276 Type 316
5	Packing Gland	ASTM A276 Type 316
6	Stem Seals	PTFE
7	Seats	TFM 1700
8	Gland Screws	ASTM A193 B8 Class 1
9	Gland Plate	302 or 304 Stainless Steel
10	Stem Nut	316 Stainless Steel
11	Lever	302 or 304 with Vinyl Grip
12	Stem Bearing	RPTFE
13	Stop	ASTM A276 Type 316
14	Stop Screw	18-8 Stainless Steel
15	Lock Plate	302 or 304 Stainless Steel
16	Body Seal	RPTFE
17	Lockwasher	302 or 304 Stainless Steel
18	Grounding Spring	Stainless Steel

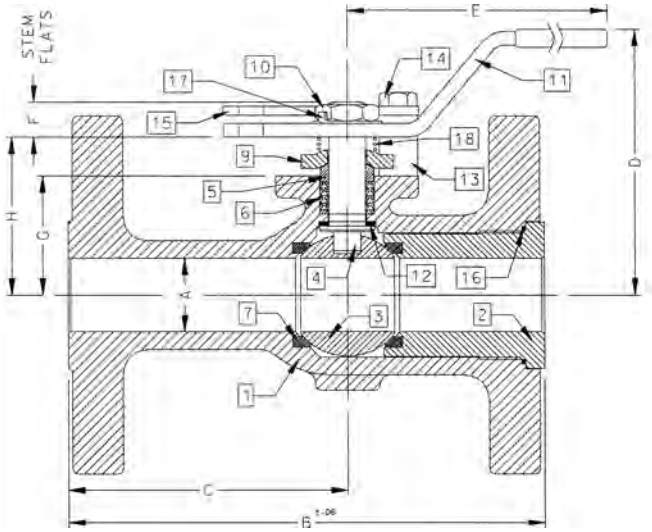

ACTUATOR MOUNTING

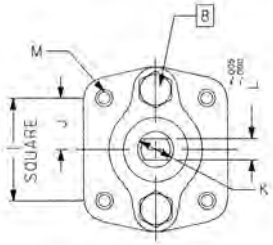

VARIATIONS AVAILABLE

- 87H - Hastelloy
- 87M - Monel
- 87N - Nickel
- 87S - 304L Stainless Steel

OPTIONS AVAILABLE

(MORE INFORMATION IN SECTION J)

- Minimum quantities apply.
- To specify an option, replace the "01" standard suffix with the suffix of the option.
- To specify multiple options, replace the "01" suffix with the desired suffixes in the numerical order shown below. NOTE: Not all suffixes can be combined together.

(SUFFIX)	OPTION
-01	Standard Configuration
-04-	2-1/4" Stem Extension (Carbon Steel, Zinc Plated)
-14-	Side Vented Ball (Uni-Directional)
-15-	Wheel Handle, Steel
-21-	UHMWPE Seats
-24-	Graphite Packing, Spiral Wound Graphite Body Seal, RPTFE Bearing (API 607, 6th Edition, ISO 10497:2010)
-35-	PTFE Seats and Seals
-38-	PEEK Seats and Graphite Packing
-49-	No Lubrication. Assembled Dry
-57-	Oxygen Cleaned
-65-	MPTFE Seats and Graphite Packing (Fire Safe)
-69-	Drilled and Tapped Purge Port with Plugs
-70-	4" Extended Bonnet
-73-	316 Stainless Steel Spiral Wound Gaskets with PTFE Filler
-76-	Live Loaded (Lever)
-77-	Live Loaded (Gear, Actuator)
-80-	TFM 1600 Seats, PTFE Chevron Packing, Spiral Wound PTFE Body Seal, PEEK Bearing
-82-	Flat Face Flanges
-90-	Double Packed 4" Extended Bonnet
-9P-	Double Packed 4" Extended Bonnet with Monitoring Port
-EF-	Graphite Packing (API 641 Compliant) (Not Available on 1/2" Size)
-CE-	CE Marking. See Page D-3 "Product Approvals" for Availability
-EP-	Garlock EVSP Stem Packing with Spiral Wound Graphite Gasket (Fire Safe by Design)
-KF-	PCTFE Stem Bearing
-MP-	Positive Material Identification
-TC-	With Test Certificate
-TD-	Tested to API Spec 6D
-UA-	AIS (American Iron & Steel) Compliant
-UL-	UL & CSA Listed (with Markings)
-ZP1-	Fugitive Emissions Packing (Viton)
-ZP2-	Fugitive Emissions Packing (Buna-N)
-ZP3-	Fugitive Emissions Packing (Kalrez)

Pressure/Temperature Ratings - Page M-11, Graph No. 6

DIMENSIONS

PART NO.	SIZE	A	B	C	D	E	F	G	H	I	J	K	L	M	WT.
87A-903-01A	1/2"	0.50	5.50	3.31	2.74	5.12	0.24	1.09	1.44	1.000	0.500	0.375	0.245	10-24	6
87A-904-01A	3/4"	0.75	6.00	3.56	3.43	5.54	0.22	1.65	2.13	1.392	0.696	0.500	0.287	1/4-20	9
87A-905-01	1"	1.00	6.50	3.82	4.62	6.53	0.47	1.62	2.15	1.392	0.696	0.500	0.287	1/4-20	11

REV. 10SEP19

87A-900 SERIES

STAINLESS STEEL ASME CLASS 300 FLANGED FULL PORT BALL VALVE
1-1/2" THRU 2-1/2"

5 YEAR WARRANTY MADE IN USA

FOR STANDARDS COMPLIANCE AND STANDARD FEATURES REFER TO PAGE D-3.

STANDARD MATERIAL LIST

	PART	MATERIAL
1	Body	ASTM A351 CF8M
2	Retainer	ASTM A351 CF8M
3	Ball	ASTM A276 Type 316 or A351 CF8M
4	Stem	ASTM A276 Type 316
5	Packing Gland	ASTM A276 Type 316
6	Stem Seals	PTFE
7	Seats	TFM 1700
8	Gland Screws	ASTM A193 B8 Class 1
9	Gland Plate	316 Stainless Steel
10	Stem Nut	18-8 Stainless Steel
11	Lever	316 Stainless Steel
12	Stem Bearing	RPTFE
13	Stop	ASTM A276 Type 316
14	Stop Screw	316 Stainless Steel
15	Lock Plate	302 or 304 Stainless Steel
16	Body Seal	RPTFE
17	Grounding Spring	Stainless Steel
18	Body Joint Stud	ASTM A193 Grade B8M
19	Body Joint Nut	ASTM A194 Grade 8
20	Lockwasher	302 or 304 Stainless Steel

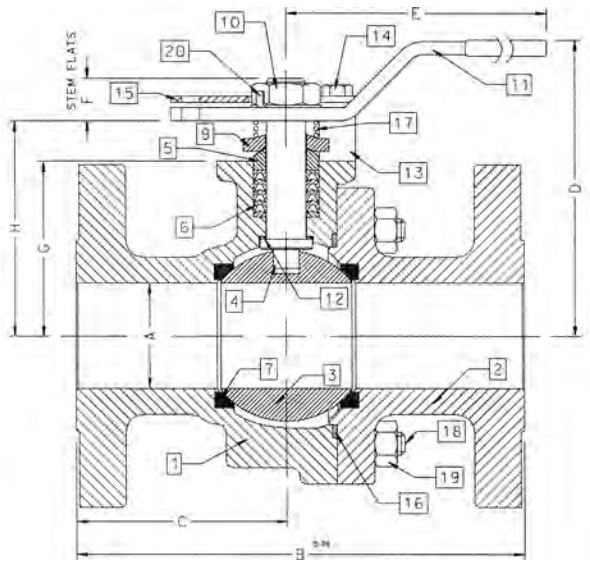

ACTUATOR MOUNTING

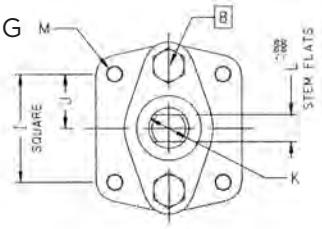

VARIATIONS AVAILABLE

- 87H - Hastelloy
- 87M - Monel
- 87N - Nickel
- 87S - 304L Stainless Steel

OPTIONS AVAILABLE

(MORE INFORMATION IN SECTION J)

- Minimum quantities apply.
- To specify an option, replace the "01" standard suffix with the suffix of the option.
- To specify multiple options, replace the "01" suffix with the desired suffixes in the numerical order shown below. NOTE: Not all suffixes can be combined together.

(SUFFIX)	OPTION
-01	Standard Configuration
-04-	2-1/4" Stem Extension (Carbon Steel, Zinc Plated)
-14-	Side Vented Ball (Uni-Directional)
-21-	UHMWPE Seats
-24-	Graphite Packing, Spiral Wound Graphite Body Seal, RPTFE Bearing (API 607, 6th Edition, ISO 10497:2010)
-35-	PTFE Seats and Seals
-38-	PEEK Seats and Graphite Packing (3" Only)
-49-	No Lubrication. Assembled Dry
-57-	Oxygen Cleaned
-65-	MPTFE Seats and Graphite Packing (Fire Safe)
-69-	Drilled and Tapped Purge Ports with Plugs
-70-	4" Extended Bonnet
-73-	316 Stainless Steel Spiral Wound Gaskets with PTFE Filler
-76-	Live Loaded (Lever)
-77-	Live Loaded (Gear, Actuator)
-80-	TFM 1600 Seats, PTFE Chevron Packing, Spiral Wound PTFE Body Seal, PEEK Bearing
-82-	Flat Face Flanges
-90-	Double Packed 4" Extended Bonnet
-9P-	Double Packed 4" Extended Bonnet with Monitoring Port
-CE-	CE Marking. See Page D-3 "Product Approvals" for Availability
-EF-	Graphite Packing (API 641 Compliant)
-EP-	Garlock EVSP Stem Packing with Spiral Wound Graphite Gasket (Fire Safe by Design)
-KF-	PCTFE Stem Bearing
-MG-	Gear Operator with Standard Handwheel
-MH-	Gear Operator with Standard Handwheel & Locking Device
-MJ-	Gear Operator with Oversize Handwheel
-MK-	Gear Operator with Oversize Handwheel & Locking Device
-MP-	Positive Material Identification
-TC-	With Test Certificate
-TD-	Tested to API Spec 6D
-UA-	AIS (American Iron & Steel) Compliant
-UL-	UL & CSA Listed (with Markings)
-ZP1-	Fugitive Emissions Packing (Viton)
-ZP2-	Fugitive Emissions Packing (Buna-N)
-ZP3-	Fugitive Emissions Packing (Kalrez)

Pressure/Temperature Ratings - Page M-11, Graph No. 6

DIMENSIONS

PART NO.	SIZE	A	B	C	D	E	F	G	H	I	J	K	L	M	WT.
87A-907-01	1-1/2"	1.50	7.50	3.50	4.62	6.65	0.72	2.41	3.09	1.949	0.974	0.625	0.412	5/16-18	21
87A-908-01	2"	2.00	8.50	4.00	5.61	8.41	0.80	3.31	4.08	1.949	0.974	0.750	0.477	5/16-18	37
87A-909-01	2-1/2"	2.50	9.50	4.44	6.24	8.41	0.80	3.94	4.71	1.949	0.974	0.750	0.477	5/16-18	57

REV. 18JUL19

aalberts integrated piping systems

87A-900 SERIES

STAINLESS STEEL ASME CLASS 300 FLANGED FULL PORT BALL VALVE
3" THRU 6"

5 YEAR WARRANTY MADE IN USA

FOR STANDARDS COMPLIANCE AND STANDARD FEATURES REFER TO PAGE D-3.

STANDARD MATERIAL LIST

	PART	MATERIAL
1	Body	ASTM A351 CF8M
2	Retainer	ASTM A351 CF8M
3	Ball	ASTM A276 Type 316 or A351 CF8M
4	Stem	ASTM A276 Type 316
5	Packing Gland	ASTM A276 Type 316
6	Stem Seals	PTFE
7	Seats	TFM 1700
8	Gland Screws	ASTM A193 B8 Class 1
9	Gland Plate	316 Stainless Steel
10	Adapter Screw	18-8 Stainless Steel
11	Handle Adapter	316 Stainless Steel
12	Stem Bearing	RPTFE
13	Stop	ASTM A276 Type 316
14	Stop Screw	316 Stainless Steel
15	Lock Plate	302 or 304 Stainless Steel
16	Body Seal	RPTFE
17	Grounding Spring	Stainless Steel
18	Body Joint Stud	ASTM A193 Grade B8M
19	Body Joint Nut	ASTM A194 Grade 8
20	Pipe Handle	Galvanized Steel (not shown)

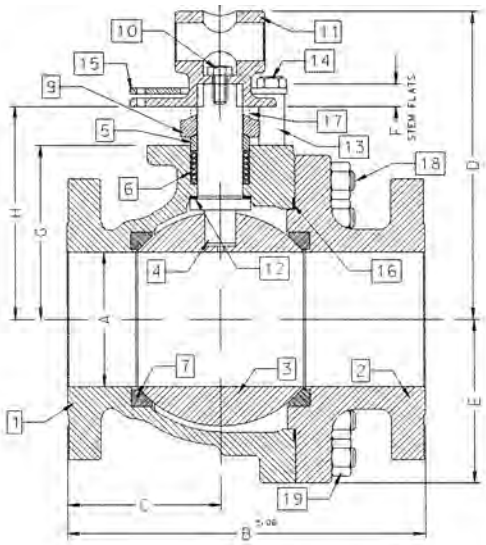

ACTUATOR MOUNTING

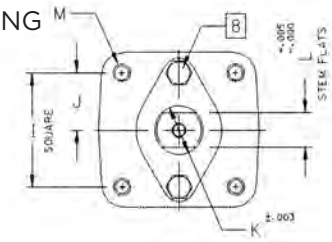

VARIATIONS AVAILABLE

- 87H - Hastelloy
- 87N - Nickel
- 87S - 304L Stainless Steel

OPTIONS AVAILABLE

(MORE INFORMATION IN SECTION J)

- Minimum quantities apply.
- To specify an option, replace the "01" standard suffix with the suffix of the option.
- To specify multiple options, replace the "01" suffix with the desired suffixes in the numerical order shown below. NOTE: Not all suffixes can be combined together.

(SUFFIX)	OPTION
-01	Standard Configuration
-14-	Side Vented Ball (Uni-Directional)
-21-	UHMWPE Seats
-24-	Graphite Packing, Spiral Wound Graphite Body Seal, RPTFE Bearing (API 607, 6th Edition, ISO 10497:2010)
-35-	PTFE Seats and Seals
-38-	PEEK Seats and Graphite Packing (3" Only)
-49-	No Lubrication. Assembled Dry
-57-	Oxygen Cleaned
-65-	MPTFE Seats and Graphite Packing (Fire Safe)
-69-	Drilled and Tapped Purge Port with Plugs
-70-	4" Extended Bonnet
-73-	316 Stainless Steel Spiral Wound Gaskets with PTFE Filler
-76-	Live Loaded (Lever)
-77-	Live Loaded (Gear, Actuator)
-80-	TFM 1600 Seats, PTFE Chevron Packing, Spiral Wound PTFE Body Seal, PEEK Bearing
-82-	Flat Face Flanges
-90-	Double Packed 4" Extended Bonnet
-9P-	Double Packed 4" Extended Bonnet with Monitoring Port
-CE-	CE Marking. See Page D-3 "Product Approvals" for Availability
-EF-	Graphite Packing (API 641 Compliant)
-EP-	Garlock EVSP Stem Packing with Spiral Wound Graphite Gasket (Fire Safe by Design)
-KF-	PCTFE Stem Bearing
-MG-	Gear Operator with Standard Handwheel
-MH-	Gear Operator with Standard Handwheel & Locking Device
-MJ-	Gear Operator with Oversize Handwheel
-MK-	Gear Operator with Oversize Handwheel & Locking Device
-MP-	Positive Material Identification
-TC-	With Test Certificate
-TD-	Tested to API Spec 6D
-UA-	AIS (American Iron & Steel) Compliant
-UL-	UL & CSA Listed (with Markings)
-ZP1-	Fugitive Emissions Packing (Viton)
-ZP2-	Fugitive Emissions Packing (Buna-N)
-ZP3-	Fugitive Emissions Packing (Kalrez)

Pressure/Temperature Ratings - Page M-11, Graph No. 6

DIMENSIONS

PART NO.	SIZE	A	B	C	D	E	F	G	H	I	J	K	L	M	WT.
87A-900-01	3"	3.00	11.12	5.24	8.80	4.06	0.50	4.75	5.95	2.840	1.420	1.250	0.725	3/8-16	78
87A-90A-01	4"	4.00	12.00	5.44	9.99	5.25	0.50	5.94	7.13	2.840	1.420	1.250	0.725	3/8-16	133
87A-90C-01	6"	6.00	15.88	6.82	13.73	7.30	1.00	7.75	9.48	4.596	2.298	2.000	1.375	3/4-10	329

REV. 18JUL19

87A-900 SERIES

STAINLESS STEEL ASME CLASS 300 FLANGED FULL PORT BALL VALVE
8" THRU 12"

5 YEAR WARRANTY MADE IN USA

FOR STANDARDS COMPLIANCE AND STANDARD FEATURES REFER TO PAGE D-3.

STANDARD MATERIAL LIST

	PART	MATERIAL
1	Body	ASTM A351 CF8M
2	Retainer	ASTM A351 CF8M
3	Ball	ASTM A276 Type 316 or A351 CF8M
4	Stem	ASTM A276 Type 316
5	Packing Gland	ASTM A276 Type 316
6	Stem Seals	PTFE
7	Seats	TFM 1700
8	Gland Screws	ASTM A193 B8 Class 1
9	Gland Plate	316 Stainless Steel
10	Stem Bearing	RPTFE
11	Body Seal	RPTFE
12	Body Joint Stud	ASTM A193 Grade B8M
13	Body Joint Nut	ASTM A194 Grade 8

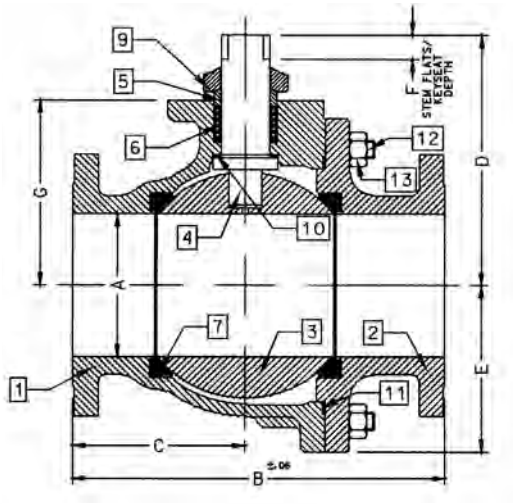

VARIATIONS AVAILABLE

- 87H - Hastelloy
- 87N - Nickel
- 87S - 304L Stainless Steel

OPTIONS AVAILABLE

(MORE INFORMATION IN SECTION J)

- Minimum quantities apply.
- To specify an option, replace the "01" standard suffix with the suffix of the option.
- To specify multiple options, replace the "01" suffix with the desired suffixes in the numerical order shown below. NOTE: Not all suffixes can be combined together.

(SUFFIX)	OPTION
-01	Standard Configuration
-14-	Side Vented Ball (Uni-Directional)
-21-	UHMWPE Seats
-24-	Graphite Packing, Spiral Wound Graphite Body Seal, RPTFE Bearing (API 607, 6th Edition, ISO 10497:2010)
-35-	PTFE Seats and Seals
-49-	No Lubrication. Assembled Dry
-57-	Oxygen Cleaned
-65-	MPTFE Seats and Graphite Packing (Fire Safe)
-69-	Drilled and Tapped Purge Ports with Plugs
-70-	4" Extended Bonnet (8" Only)
-77-	Live Loaded (Gear, Actuator)
-80-	TFM 1600 Seats, PTFE Chevron Packing, Spiral Wound PTFE Body Seal, PEEK Bearing
-82-	Flat Face Flanges
-90-	Double Packed 4" Extended Bonnet
-9P-	Double Packed 4" Extended Bonnet with Monitoring Port
-CE-	CE Marking. See Page D-3 "Product Approvals" for Availability
-EF-	Graphite Packing (API 641 Compliant)
-EP-	Garlock EVSP Stem Packing with Spiral Wound Graphite Gasket (Fire Safe by Design)
-KF-	PCTFE Stem Bearing
-MG-	Gear Operator with Standard Handwheel
-MH-	Gear Operator with Standard Handwheel & Locking Device
-MJ-	Gear Operator with Oversize Handwheel
-MK-	Gear Operator with Oversize Handwheel & Locking Device
-MP-	Positive Material Identification
-TC-	With Test Certificate
-TD-	Tested to API Spec 6D
-UA-	AIS (American Iron & Steel) Compliant
-UL-	UL & CSA Listed (with Markings)
-ZP1-	Fugitive Emissions Packing (Viton)
-ZP2-	Fugitive Emissions Packing (Buna-N)
-ZP3-	Fugitive Emissions Packing (Kalrez)

Pressure/Temperature Ratings - Page M-11, Graph No. 6

ACTUATOR MOUNTING

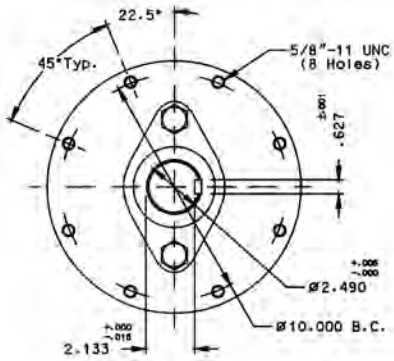

10" & 12"

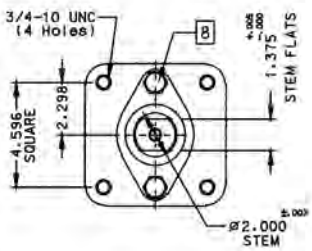

8"

DIMENSIONS

PART NO.	SIZE	A	B	C	D	E	F	G
87A-90E-01	8"	8.00	19.75	9.38	12.83	9.56	1.00	10.22
87A-90G-01	10"	10.00	22.38	10.95	18.57	11.33	2.31	12.80
87A-90H-01	12"	12.00	25.50	12.84	20.31	13.40	2.31	14.92

REV. 18JUL19

aalberts integrated piping systems

87B-100 SERIES

STAINLESS STEEL ASME CLASS 150 FLANGED STD. PORT BALL VALVE
3"

5 YEAR WARRANTY MADE IN USA

FOR STANDARDS COMPLIANCE AND STANDARD FEATURES REFER TO PAGE D-3.

STANDARD MATERIAL LIST

	PART	MATERIAL
1	Body	ASTM A351 CF8M
2	Retainer	ASTM A276 Type 316
3	Ball	ASTM A276 Type 316 or A351 CF8M
4	Stem	ASTM A276 Type 316
5	Packing Gland	ASTM A276 Type 316
6	Stem Seals	PTFE
7	Seats	TFM 1700
8	Gland Screws	ASTM A193 B8 Class 1
9	Gland Plate	316 Stainless Steel
10	Stem Nut	18-8 Stainless Steel
11	Lever	316 Stainless Steel with Vinyl Grip
12	Stem Bearing	RPTFE
13	Stop	ASTM A276 Type 316
14	Stop Screw	316 Stainless Steel
15	Lock Plate	302 or 304 Stainless Steel
16	Body Seal	RPTFE
17	Grounding Spring	Stainless Steel
18	Lockwasher	302 or 304 Stainless Steel

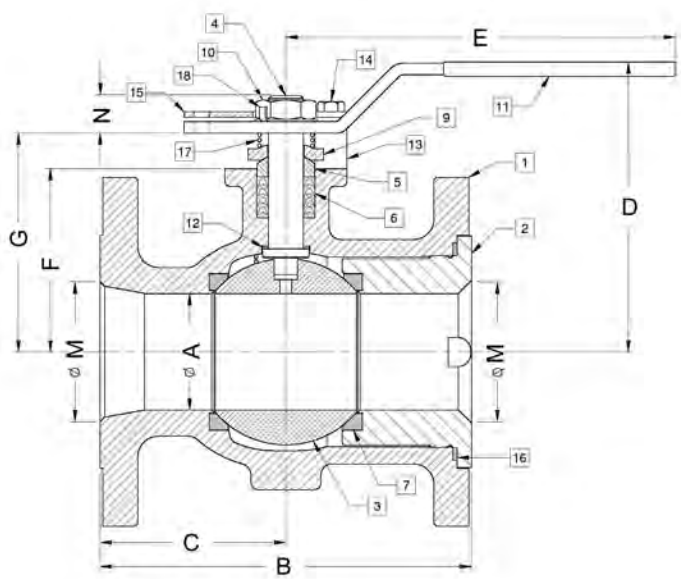

ACTUATOR MOUNTING

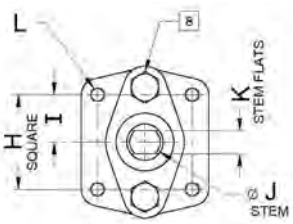

VARIATIONS AVAILABLE

- 87H - Hastelloy
- 87N - Nickel
- 87S - 304L Stainless Steel

OPTIONS AVAILABLE

(MORE INFORMATION IN SECTION J)

- Minimum quantities apply.
- To specify an option, replace the "01" standard suffix with the suffix of the option.
- To specify multiple options, replace the "01" suffix with the desired suffixes in the numerical order shown below. NOTE: Not all suffixes can be combined together.

(SUFFIX)	OPTION
-01	Standard Configuration
-04-	2-1/4" Stem Extension (Carbon Steel, Zinc Plated)
-14-	Side Vented Ball (Uni-Directional)
-21-	UHMWPE Seats
-24-	Graphite Packing, Spiral Wound Graphite Body Seal, RPTFE Bearing (API 607, 6th Edition, ISO 10497:2010)
-35-	PTFE Seats and Seals
-38-	PEEK Seats and Graphite Packing (3" Only)
-49-	No Lubrication. Assembled Dry
-57-	Oxygen Cleaned
-65-	MPTFE Seats and Graphite Packing (Fire Safe)
-69-	Drilled and Tapped Purge Ports with Plugs
-70-	4" Extended Bonnet
-76-	Live Loaded (Lever)
-77-	Live Loaded (Gear, Actuator)
-80-	TFM 1600 Seats, PTFE Chevron Packing, Spiral Wound PTFE Body Seal, PEEK Bearing
-82-	Flat Face Flanges
-90-	Double Packed 4" Extended Bonnet
-9P-	Double Packed 4" Extended Bonnet with Monitoring Port
-CE-	CE Marking. See Page D-3 "Product Approvals" for Availability
-EF-	Graphite Packing (API 641 Compliant)
-EP-	Garlock EVSP Stem Packing with Spiral Wound Graphite Gasket (Fire Safe by Design)
-KF-	PCTFE Stem Bearing
-MG-	Gear Operator with Standard Handwheel
-MH-	Gear Operator with Standard Handwheel & Locking Device
-MJ-	Gear Operator with Oversize Handwheel
-MK-	Gear Operator with Oversize Handwheel & Locking Device
-MP-	Positive Material Identification
-TC-	With Test Certificate
-TD-	Tested to API Spec 6D
-UA-	AIS (American Iron & Steel) Compliant
-UL-	UL & CSA Listed (with Markings)
-ZP1-	Fugitive Emissions Packing (Viton)
-ZP2-	Fugitive Emissions Packing (Buna-N)
-ZP3-	Fugitive Emissions Packing (Kalrez)

Pressure/Temperature Ratings - Page M-9, Graph No. 2

DIMENSIONS

PART NO.	SIZE	A	B	C	D	E	F	G	H	I	J	K	L	M	N	WT.
87B-100-01	3"	2.50	8.00	4.00	6.23	8.40	3.93	4.70	1.949	0.974	0.750	0.477	5/16-18	3.00	0.77	43

REV. 18JUL19

87B-100 SERIES

STAINLESS STEEL ASME CLASS 150 FLANGED STD. PORT BALL VALVE
4" THRU 10" SHORT PATTERN

5 YEAR WARRANTY MADE IN USA

FOR STANDARDS COMPLIANCE AND STANDARD FEATURES REFER TO PAGE D-3.

STANDARD MATERIAL LIST

	PART	MATERIAL
1	Body	ASTM A351 CF8M
2	Retainer	ASTM A276 Type 316
3	Ball	ASTM A276 Type 316 or A351 CF8M
4	Stem	ASTM A276 Type 316
5	Packing Gland	ASTM A276 Type 316
6	Stem Seals	PTFE
7	Seats	TFM 1700
8	Gland Screws	ASTM A193 B8 Class 1
9	Gland Plate	316 Stainless Steel
10	Adapter Screw	18-8 Stainless Steel
11	Handle Adapter	316 Stainless Steel
12	Stem Bearing	RPTFE
13	Stop	ASTM A276 Type 316
14	Stop Screw	316 Stainless Steel
15	Lock Plate	302 or 304 Stainless Steel
16	Body Seal	RPTFE
17	Lockwasher	302 or 304 Stainless Steel
18	Grounding Spring	Stainless Steel
19	Adapter Screw	18-8 Stainless Steel

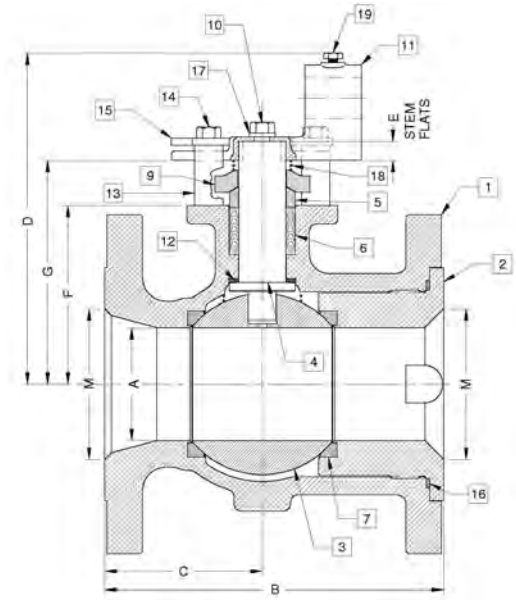

ACTUATOR MOUNTING

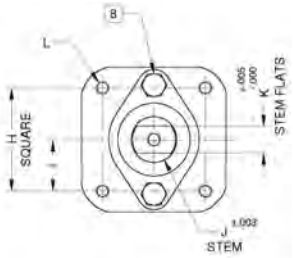

VARIATIONS AVAILABLE

- 87H - Hastelloy
- 87N - Nickel
- 87S - 304L Stainless Steel

OPTIONS AVAILABLE

(MORE INFORMATION IN SECTION J)

- Minimum quantities apply.
- To specify an option, replace the "01" standard suffix with the suffix of the option.
- To specify multiple options, replace the "01" suffix with the desired suffixes in the numerical order shown below. NOTE: Not all suffixes can be combined together.

(SUFFIX)	OPTION
-01	Standard Configuration
-04-	2-1/4" Stem Extension (Carbon Steel, Zinc Plated)
-14-	Side Vented Ball (Uni-Directional)
-21-	UHMWPE Seats
-24-	Graphite Packing, Spiral Wound Graphite Body Seal, RPTFE Bearing (API 607, 6th Edition, ISO 10497:2010)
-35-	PTFE Seats and Seals
-38-	PEEK Seats and Graphite Packing (3" Only)
-49-	No Lubrication. Assembled Dry
-57-	Oxygen Cleaned
-65-	MPTFE Seats and Graphite Packing (Fire Safe)
-69-	Drilled and Tapped Purge Ports with Plugs
-70-	4" Extended Bonnet
-76-	Live Loaded (Lever)
-77-	Live Loaded (Gear, Actuator)
-80-	TFM 1600 Seats, PTFE Chevron Packing, Spiral Wound PTFE Body Seal, PEEK Bearing
-82-	Flat Face Flanges
-90-	Double Packed 4" Extended Bonnet
-9P-	Double Packed 4" Extended Bonnet with Monitoring Port
-CE-	CE Marking. See Page D-3 "Product Approvals" for Availability
-EF-	Graphite Packing (API 641 Compliant)
-EP-	Garlock EVSP Stem Packing with Spiral Wound Graphite Gasket (Fire Safe by Design)
-KF-	PCTFE Stem Bearing
-MG-	Gear Operator with Standard Handwheel
-MH-	Gear Operator with Standard Handwheel & Locking Device
-MJ-	Gear Operator with Oversize Handwheel
-MK-	Gear Operator with Oversize Handwheel & Locking Device
-MP-	Positive Material Identification
-TC-	With Test Certificate
-TD-	Tested to API Spec 6D
-UA-	AIS (American Iron & Steel) Compliant
-UL-	UL & CSA Listed (with Markings)
-ZP1-	Fugitive Emissions Packing (Viton)
-ZP2-	Fugitive Emissions Packing (Buna-N)
-ZP3-	Fugitive Emissions Packing (Kalrez)

Pressure/Temperature Ratings - Page M-9, Graph No. 2

DIMENSIONS

PART NO.	SIZE	A	B	C	D	E	F	G	H	I	J	K	L	M	WT.
87B-10A-01	4"	3.00	9.00	4.18	8.80	0.50	4.75	5.95	2.840	1.420	1.250	0.725	3/8-16	4.00	72
87B-10C-01	6"	4.00	10.50	5.25	9.99	0.50	5.94	7.13	2.840	1.420	1.250	0.725	3/8-16	6.00	110
87B-10E-01	8"	6.00	11.50	5.75	13.61	1.00	7.63	9.36	4.596	2.298	2.000	1.375	3/4-10	8.00	210
87B-10G-01	10"	8.00	13.00	6.50	N/A	1.00	9.50	11.23	4.596	2.298	2.000	1.375	3/4-10	10.0	350

REV. 18JUL19

aalberts integrated piping systems

87J-100 SERIES

DUPLEX STAINLESS STEEL ASME CLASS 150 FLANGED STD. PORT BALL VALVE
1-1/2" THRU 2"

5 YEAR WARRANTY MADE IN USA

FOR STANDARDS COMPLIANCE AND STANDARD FEATURES REFER TO PAGE D-3.

STANDARD MATERIAL LIST

	PART	MATERIAL
1	Body	ASTM A995 4A
2	Retainer	ASTM A276/A479 Alloy 2205
3	Ball	ASTM A276/A479 Alloy 2205 or A995 4A
4	Stem	ASTM A276/A479 Alloy 2205
5	Packing Gland	ASTM A276 Type 316
6	Stem Seals	PTFE
7	Seats	TFM 1700
8	Gland Screws	ASTM A193 B8 Class 1
9	Gland Plate	302 or 304 Stainless Steel
10	Stem Nut	ASTM A194 Grade 8
11	Lever	302 or 304 Stainless Steel with Vinyl Grip
12	Stem Bearing	RPTFE
13	Stop	ASTM A276 Type 316
14	Stop Screw	18-8 Stainless Steel
15	Lock Plate	302 or 304 Stainless Steel
16	Body Seal	RPTFE
17	Lockwasher	302 or 304 Stainless Steel
18	Grounding Spring	Stainless Steel, ASTM A313

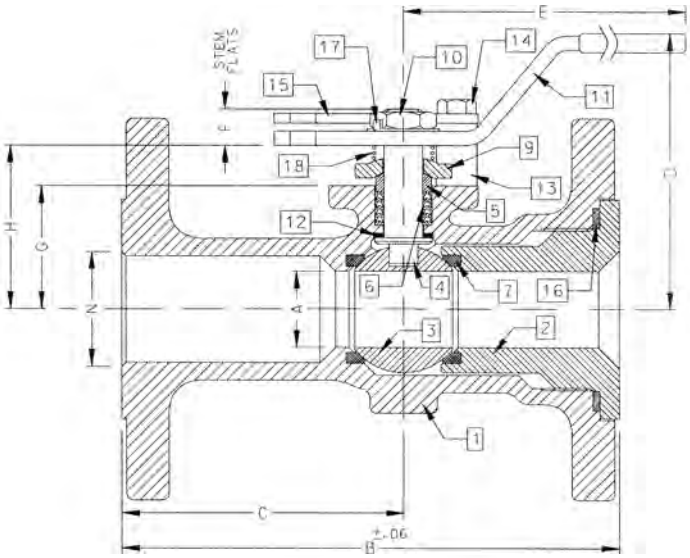

ACTUATOR MOUNTING

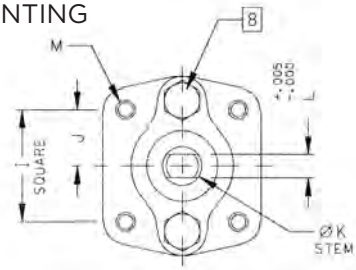

VARIATIONS AVAILABLE

- 87H - Hastelloy
- 87M - Monel (1-1/2" to 2" only)
- 87N - Nickel
- 87S - 304L Stainless Steel

OPTIONS AVAILABLE

(MORE INFORMATION IN SECTION J)

- Minimum quantities apply.
- To specify an option, replace the "01" standard suffix with the suffix of the option.
- To specify multiple options, replace the "01" suffix with the desired suffixes in the numerical order shown below. NOTE: Not all suffixes can be combined together.

(SUFFIX)	OPTION
-01	Standard Configuration
-04-	2-1/4" Stem Extension (Carbon Steel, Zinc Plated)
-14-	Side Vented Ball (Uni-Directional)
-21-	UHMWPE Seats
-24-	Graphite Packing, Spiral Wound Graphite Body Seal, RPTFE Bearing (Fire Safe "By Design")
-35-	PTFE Seats and Seals
-38-	PEEK Seats and Graphite Packing (3" Only)
-49-	No Lubrication. Assembled Dry
-57-	Oxygen Cleaned
-65-	MPTFE Seats and Graphite Packing (Fire Safe)
-69-	Drilled and Tapped Purge Ports with Plugs
-70-	4" Extended Bonnet
-76-	Live Loaded (Lever)
-77-	Live Loaded (Gear, Actuator)
-80-	TFM 1600 Seats, PTFE Chevron Packing, Spiral Wound PTFE Body Seal, PEEK Bearing
-82-	Flat Face Flanges
-90-	Double Packed 4" Extended Bonnet
-9P-	Double Packed 4" Extended Bonnet with Monitoring Port
-CE-	CE Marking. See Page D-3 "Product Approvals" for Availability
-EF-	Graphite Packing (API 641 Compliant)
-EP-	Garlock EVSP Stem Packing with Spiral Wound Graphite Gasket (Fire Safe by Design)
-KF-	PCTFE Stem Bearing
-MG-	Gear Operator with Standard Handwheel
-MH-	Gear Operator with Standard Handwheel & Locking Device
-MJ-	Gear Operator with Oversize Handwheel
-MK-	Gear Operator with Oversize Handwheel & Locking Device
-MP-	Positive Material Identification
-TC-	With Test Certificate
-TD-	Tested to API Spec 6D
-UL-	UL & CSA Listed (with Markings)
-ZP1-	Fugitive Emissions Packing (Viton)
-ZP2-	Fugitive Emissions Packing (Buna-N)
-ZP3-	Fugitive Emissions Packing (Kalrez)

Pressure/Temperature Ratings - Page M-28, Graph No. 40

DIMENSIONS

PART NO.	SIZE	A	B	C	D	E	F	G	H	I	J	K	L	M	N	WT.
87J-107-01	1-1/2"	1.25	6.50	3.50	4.85	6.53	0.47	1.85	2.38	1.392	0.696	0.500	0.287	1/4-20	1.50	9
87J-108-01	2"	1.50	7.00	3.69	4.62	6.65	0.72	2.41	3.09	1.949	0.974	0.625	0.412	5/16-18	2.00	18

REV. 18JUL19

87J-100 SERIES

DUPLEX STAINLESS STEEL ASME CLASS 150 FLANGED STD. PORT BALL VALVE
2-1/2" THRU 3"

5 YEAR WARRANTY MADE IN USA

FOR STANDARDS COMPLIANCE AND STANDARD FEATURES REFER TO PAGE D-3.

STANDARD MATERIAL LIST

	PART	MATERIAL
1	Body	ASTM A995 4A
2	Retainer	ASTM A995 4A
3	Ball	ASTM A276/A479 Alloy 2205 or A995 4A
4	Stem	ASTM A276/A479 Alloy 2205
5	Packing Gland	ASTM A276 Type 316
6	Stem Seals	PTFE
7	Seats	TFM 1700
8	Gland Screws	ASTM A193 B8 Class 1
9	Gland Plate	316 Stainless Steel
10	Stem Nut	ASTM A194 Grade 8 Stainless Steel
11	Lever	316 Stainless Steel
12	Stem Bearing	RPTFE
13	Stop	ASTM A276 Type 316
14	Stop Screw	316 Stainless Steel
15	Lock Plate	302 or 304 Stainless Steel
16	Body Seal	RPTFE
17	Grounding Spring	Stainless Steel, ASTM A313
18	Body Joint Stud	ASTM A193 Grade B8M
19	Body Joint Nut	ASTM A194 Grade 8
20	Lockwasher	302 or 304 Stainless Steel

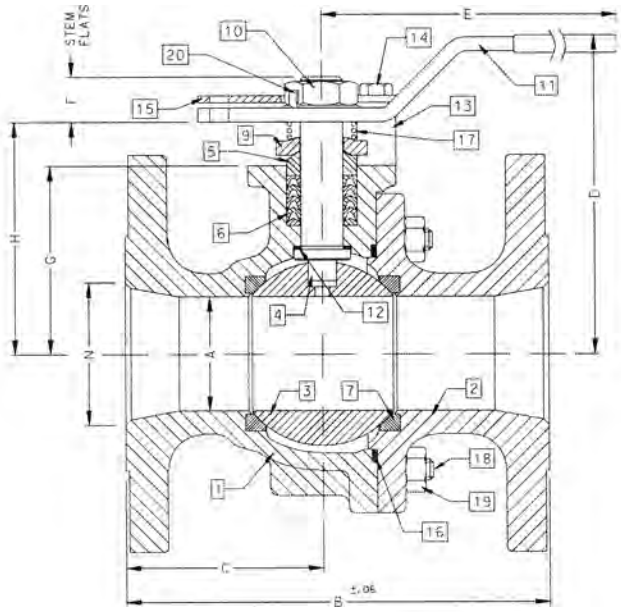

ACTUATOR MOUNTING

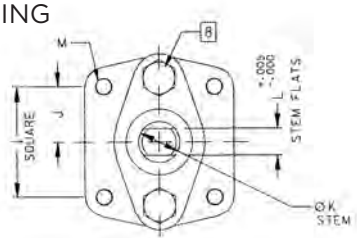

VARIATIONS AVAILABLE

- 87H - Hastelloy
- 87N - Nickel
- 87S - 304L Stainless Steel

OPTIONS AVAILABLE

(MORE INFORMATION IN SECTION J)

- Minimum quantities apply.
- To specify an option, replace the "01" standard suffix with the suffix of the option.
- To specify multiple options, replace the "01" suffix with the desired suffixes in the numerical order shown below. NOTE: Not all suffixes can be combined together.

(SUFFIX)	OPTION
-01	Standard Configuration
-04-	2-1/4" Stem Extension (Carbon Steel, Zinc Plated)
-14-	Side Vented Ball (Uni-Directional)
-21-	UHMWPE Seats
-24-	Graphite Packing, Spiral Wound Graphite Body Seal, RPTFE Bearing (Fire Safe "By Design")
-35-	PTFE Seats and Seals
-38-	PEEK Seats and Graphite Packing
-49-	No Lubrication. Assembled Dry
-57-	Oxygen Cleaned
-65-	MPTFE Seats and Graphite Packing (Fire Safe)
-67-	Cleaned for Industrial Gases
-69-	Drilled and Tapped Purge Port with Plugs
-70-	4" Extended Bonnet
-73-	316 Stainless Steel Spiral Wound Gaskets with PTFE Filler
-76-	Live Loaded 87A/88A Series (Lever)
-77-	Live Loaded (Gear, Actuator)
-80-	TFM 1600 Seats, PTFE Chevron Packing, Spiral Wound PTFE Body Seal PEEK Bearing
-82-	Flat Face Flanges
-90-	Double Packed 4" Extended Bonnet
-9P-	Double Packed 4" Extended Bonnet with Monitoring Port
-CE-	CE Marking. See Page D-3 "Product Approvals" for Availability
-EF-	Graphite Packing (API 641 Compliant)
-EP-	Garlock EVSP Stem Packing with Spiral Wound Graphite Gasket (Fire Safe by Design)
-KF-	PCTFE Stem Bearing
-MG-	Gear Operator with Standard Handwheel
-MH-	Gear Operator with Standard Handwheel & Locking Device
-MJ-	Gear Operator with Oversize Handwheel
-MK-	Gear Operator with Oversize Handwheel & Locking Device
-MP-	Positive Material Identification
-TC-	With Test Certificate
-TD-	Tested to API Spec 6D
-ZP1-	Fugitive Emissions Packing (Viton)
-ZP2-	Fugitive Emissions Packing (Buna-N)
-ZP3-	Fugitive Emissions Packing (Kalrez)

Pressure/Temperature Ratings - Page M-28, Graph No. 40

DIMENSIONS

PART NO.	SIZE	A	B	C	D	E	F	G	H	I	J	K	L	M	N	WT.
87J-109-01	2-1/2"	2.00	7.50	3.50	5.61	8.41	0.80	3.31	4.08	1.949	0.974	0.750	0.477	5/16-18	2.50	27
87J-100-01	3"	2.50	8.00	3.51	6.24	8.41	0.80	3.94	4.71	1.949	0.974	0.750	0.477	5/16-18	3.00	34

REV. 18JUL19

aalberts integrated piping systems

87J-100 SERIES

DUPLEX STAINLESS STEEL ASME CLASS 150 FLANGED STD. PORT BALL VALVE
4" THRU 8"

5 YRS WARRANTY MADE IN USA

FOR STANDARDS COMPLIANCE AND STANDARD FEATURES REFER TO PAGE D-3.

STANDARD MATERIAL LIST

	PART	MATERIAL
1	Body	ASTM A995 4A
2	Retainer	ASTM A995 4A
3	Ball	ASTM A276/A479 Alloy 2205 or A995 4A
4	Stem	ASTM A276/A479 Alloy 2205
5	Packing Gland	ASTM A276 Type 316
6	Stem Seals	PTFE
7	Seats	TFM 1700
8	Gland Screws	ASTM A193 B8 Class 1
9	Gland Plate	316 Stainless Steel
10	Adapter Screw	18-8 Stainless Steel
11	Handle Adapter	316 Stainless Steel
12	Stem Bearing	RPTFE
13	Stop	ASTM A276 Type 316
14	Stop Screw	316 Stainless Steel
15	Lock Plate	302 or 304 Stainless Steel
16	Body Seal	RPTFE
17	Grounding Spring	Stainless Steel, ASTM 313
18	Body Joint Stud	ASTM A193 Grade B8M
19	Body Joint Nut	ASTM A194 Grade 8
20	Lockwasher	302 or 304 Stainless Steel
21	Pipe Handle	Galvanized Steel (not Shown)

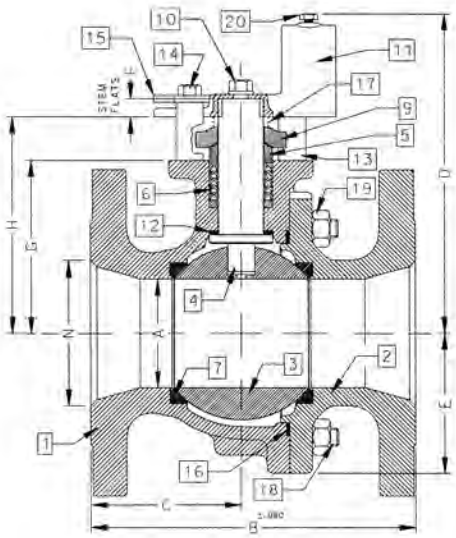

ACTUATOR MOUNTING

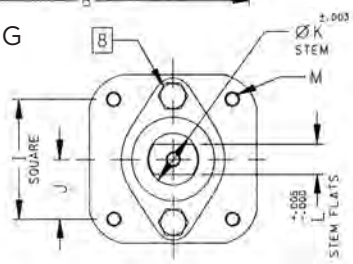

VARIATIONS AVAILABLE

- 87H - Hastelloy
- 87N - Nickel
- 87S - 304L Stainless Steel

OPTIONS AVAILABLE

(MORE INFORMATION IN SECTION J)

- Minimum quantities apply.
- To specify an option, replace the "01" standard suffix with the suffix of the option.
- To specify multiple options, replace the "01" suffix with the desired suffixes in the numerical order shown below. NOTE: Not all suffixes can be combined together.

(SUFFIX)	OPTION
-01	Standard Configuration
-14-	Side Vented Ball (Uni-Directional)
-21-	UHMWPE Seats
-24-	Graphite Packing, Spiral Wound Graphite Body Seal, RPTFE Bearing (Fire Safe "By Design")
-35-	PTFE Seats and Seals
-49-	No Lubrication. Assembled Dry
-57-	Oxygen Cleaned
-65-	MPTFE Seats and Graphite Packing (Fire Safe)
-67-	Cleaned for Industrial Gases
-69-	Drilled and Tapped Purge Ports with Plugs
-70-	Extended Bonnet
-73-	316 Stainless Steel Spiral Wound Gaskets with PTFE Filler
-76-	Live Loaded (Lever)
-77-	Live Loaded (Gear, Actuator)
-80-	TFM 1600 Seats, PTFE Chevron Packing, Spiral Wound PTFE Body Seal PEEK Bearing
-82-	Flat Face Flanges
-90-	Double Packed 4" Extended Bonnet
-9P-	Double Packed 4" Extended Bonnet with Monitoring Port
-CE-	CE Marking. See Page D-3 "Product Approvals" for Availability
-EF-	Graphite Packing (API 641 Compliant)
-EP-	Garlock EVSP Stem Packing with Spiral Wound Graphite Gasket (Fire Safe by Design)
-KF-	PCTFE Stem Bearing
-MG-	Gear Operator with Standard Handwheel
-MH-	Gear Operator with Standard Handwheel & Locking Device
-MJ-	Gear Operator with Oversize Handwheel
-MK-	Gear Operator with Oversize Handwheel & Locking Device
-MP-	Positive Material Identification
-TC-	With Test Certificate
-TD-	Tested to API Spec 6D
-ZP1-	Fugitive Emissions Packing (Viton)
-ZP2-	Fugitive Emissions Packing (Buna-N)
-ZP3-	Fugitive Emissions Packing (Kalrez)

Pressure/Temperature Ratings - Page M-28, Graph No. 40

DIMENSIONS

PART NO.	SIZE	A	B	C	D	E	F	G	H	I	J	K	L	M	N	WT.
87J-10A-01	4"	3.00	9.00	4.18	8.80	3.88	0.50	4.75	5.95	2.840	1.420	1.250	0.725	3/8-16	4.00	73
87J-10C-01	6"	4.00	10.50	4.69	9.99	5.13	0.50	5.94	7.13	2.840	1.420	1.250	0.725	3/8-16	6.00	117
87J-10E-01	8"	6.00	18.00	9.00	13.73	7.00	1.00	7.75	9.48	4.596	2.298	2.000	1.375	3/4-10	8.00	310

REV. 18JUL19

87J-100 SERIES

DUPLEX STAINLESS STEEL ASME CLASS 150 FLANGED STD. PORT BALL VALVE
10"

5 YEAR WARRANTY MADE IN USA

FOR STANDARDS COMPLIANCE AND STANDARD FEATURES REFER TO PAGE D-3.

STANDARD MATERIAL LIST

	PART	MATERIAL
1	Body	ASTM A995 4A
2	Retainer	ASTM A995 4A
3	Ball	ASTM A276/A479 Alloy 2205 or A995 4A
4	Stem	ASTM A276/A479 Alloy 2205
5	Packing Gland	ASTM A276 Type 316
6	Stem Seals	PTFE
7	Seats	TFM 1700
8	Gland Screws	ASTM A193 B8 Class 1
9	Gland Plate	316 Stainless Steel
10	Stem Bearing	RPTFE
11	Body Seal	RPTFE
12	Body Joint Stud	ASTM A193 Grade B8M
13	Body Joint Nut	ASTM A194 Grade 8

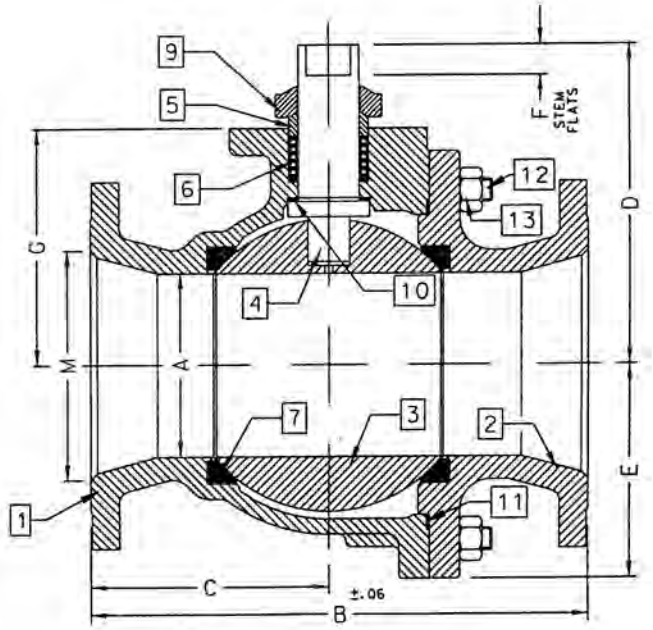

ACTUATOR MOUNTING

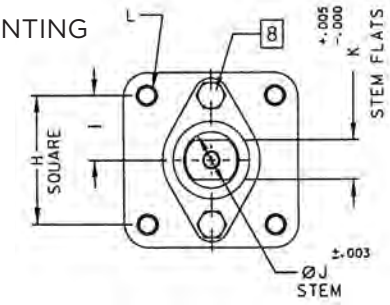

VARIATIONS AVAILABLE

- 87H - Hastelloy
- 87N - Nickel
- 87S - 304L Stainless Steel

OPTIONS AVAILABLE

(MORE INFORMATION IN SECTION J)

- Minimum quantities apply.
- To specify an option, replace the "01" standard suffix with the suffix of the option.
- To specify multiple options, replace the "01" suffix with the desired suffixes in the numerical order shown below. NOTE: Not all suffixes can be combined together.

(SUFFIX)	OPTION
-01	Standard Configuration
-14-	Side Vented Ball (Uni-Directional)
-21-	UHMWPE Seats
-24-	Graphite Packing, Spiral Wound Graphite Body Seal, RPTFE Bearing (Fire Safe "By Design")
-35-	PTFE Seats and Seals
-49-	No Lubrication. Assembled Dry
-57-	Oxygen Cleaned
-65-	MPTFE Seats and Graphite Packing (Fire Safe)
-69-	Drilled and Tapped Purge Port with Plugs
-70-	4" Extended Bonnet
-77-	Live Loaded 87A/88A Series (Gear, Actuator)
-80-	TFM 1600 Seats, PTFE Chevron Packing, Spiral Wound PTFE Body Seal, PEEK Bearing
-82-	Flat Face Flanges
-90-	Double Packed 4" Extended Bonnet
-9P-	Double Packed 4" Extended Bonnet with Monitoring Port
-CE-	CE Marking. See Page D-3 "Product Approvals" for Availability
-EF-	Graphite Packing (API 641 Compliant)
-EP-	Garlock EVSP Stem Packing with Spiral Wound Graphite Gasket (Fire Safe by Design)
-KF-	PCTFE Stem Bearing
-MG-	Gear Operator with Standard Handwheel
-MH-	Gear Operator with Standard Handwheel & Locking Device
-MJ-	Gear Operator with Oversize Handwheel
-MK-	Gear Operator with Oversize Handwheel & Locking Device
-MP-	Positive Material Identification
-TC-	With Test Certificate
-TD-	Tested to API Spec 6D
-ZP1-	Fugitive Emissions Packing (Viton)
-ZP2-	Fugitive Emissions Packing (Buna-N)
-ZP3-	Fugitive Emissions Packing (Kalrez)

Pressure/Temperature Ratings - Page M-28, Graph No. 40

DIMENSIONS

PART NO.	SIZE	A	B	C	D	E	F	G	H	I	J	K	L	M	WT.
87J-10G-01	10"	8.00	21.00	10.37	12.83	9.18	1.00	10.22	4.596	2.298	2.000	1.375	3/4-10	10.00	526

REV. 18JUL19

aalberts integrated piping systems

87J-200 SERIES

DUPLEX STAINLESS STEEL ASME CLASS 150 FLANGED FULL PORT BALL VALVE
1/2" THRU 1"

5 YEAR WARRANTY MADE IN USA

FOR STANDARDS COMPLIANCE AND STANDARD FEATURES REFER TO PAGE D-3.

STANDARD MATERIAL LIST

	PART	MATERIAL
1	Body	ASTM A995 4A
2	Retainer	ASTM A276/A479 Alloy 2205
3	Ball	ASTM A276/A479 Alloy 2205
4	Stem	ASTM A276/A479 Alloy 2205
5	Packing Gland	ASTM A276 Type 316
6	Stem Seals	PTFE
7	Seats	TFM 1700
8	Gland Screws	ASTM A193 B8 Class 1
9	Gland Plate	302 or 304 Stainless Steel
10	Stem Nut	316 Stainless Steel
11	Lever	302 or 304 with Vinyl Grip
12	Stem Bearing	RPTFE
13	Stop	ASTM A276 Type 316
14	Stop Screw	18-8 Stainless Steel
15	Lock Plate	302 or 304 Stainless Steel
16	Body Seal	RPTFE
17	Lockwasher	302 or 304 Stainless Steel
18	Grounding Spring	Stainless Steel

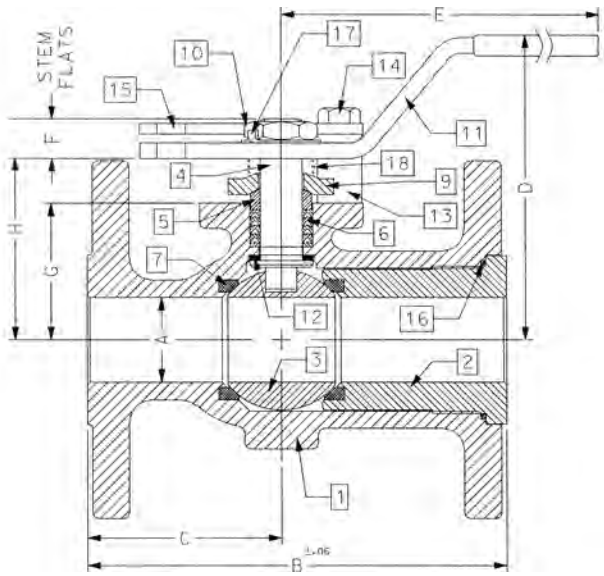

ACTUATOR MOUNTING

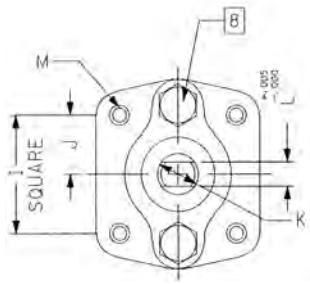

VARIATIONS AVAILABLE

- 87H - Hastelloy
- 87M - Monel
- 87N - Nickel
- 87S - 304L Stainless Steel

OPTIONS AVAILABLE

(MORE INFORMATION IN SECTION J)

- Minimum quantities apply.
- To specify an option, replace the "01" standard suffix with the suffix of the option.
- To specify multiple options, replace the "01" suffix with the desired suffixes in the numerical order shown below. NOTE: Not all suffixes can be combined together.

(SUFFIX)	OPTION
-01	Standard Configuration
-04-	2-1/4" Stem Extension (Carbon Steel, Zinc Plated)
-14-	Side Vented Ball (Uni-Directional)
-15-	Wheel Handle, Steel
-21-	UHMWPE Seats
-24-	Graphite Packing, Spiral Wound Graphite Body Seal, RPTFE Bearing (Fire Safe "By Design")
-35-	PTFE Seats and Seals
-38-	PEEK Seats and Graphite Packing
-49-	No Lubrication. Assembled Dry
-57-	Oxygen Cleaned
-65-	MPTFE Seats and Graphite Packing (Fire Safe)
-69-	Drilled and Tapped Purge Port with Plugs
-70-	4" Extended Bonnet
-73-	316 Stainless Steel Spiral Wound Gaskets with PTFE Filler
-76-	Live Loaded (Lever)
-77-	Live Loaded (Gear, Actuator)
-80-	TFM 1600 Seats, PTFE Chevron Packing, Spiral Wound PTFE Body Seal, PEEK Bearing
-82-	Flat Face Flanges
-90-	Double Packed 4" Extended Bonnet
-9P-	Double Packed 4" Extended Bonnet with Monitoring Port
-CE-	CE Marking. See Page D-3 "Product Approvals" for Availability
-EF-	Graphite Packing (API 641 Compliant) (Not Available on 1/2" Size)
-EP-	Garlock EVSP Stem Packing with Spiral Wound Graphite Gasket (Fire Safe by Design)
-KF-	PCTFE Stem Bearing
-MP-	Positive Material Identification
-TC-	With Test Certificate
-TD-	Tested to API Spec 6D
-ZP1-	Fugitive Emissions Packing (Viton)
-ZP2-	Fugitive Emissions Packing (Buna-N)
-ZP3-	Fugitive Emissions Packing (Kalrez)

Pressure/Temperature Ratings - Page M-28, Graph No. 40

DIMENSIONS

PART NO.	SIZE	A	B	C	D	E	F	G	H	I	J	K	L	M	WT.
87J-203-01A	1/2"	0.50	4.25	2.06	2.74	5.12	0.24	1.09	1.44	1.00	0.500	0.375	0.245	10-24	5
87J-204-01A	3/4"	0.75	4.62	2.18	3.43	5.54	0.22	1.65	2.13	1.392	0.696	0.500	0.287	1/4-20	6
87J-205-01	1"	1.00	5.00	2.32	4.62	6.53	0.47	1.62	2.15	1.392	0.696	0.500	0.287	1/4-20	7

REV. 10SEP19

87J-200 SERIES

DUPLEX STAINLESS STEEL ASME CLASS 150 FLANGED FULL PORT BALL VALVE
1-1/2" THRU 2-1/2"

5 YEAR WARRANTY MADE IN USA

FOR STANDARDS COMPLIANCE AND STANDARD FEATURES REFER TO PAGE D-3.

STANDARD MATERIAL LIST

	PART	MATERIAL
1	Body	ASTM A995 4A
2	Retainer	ASTM A995 4A
3	Ball	ASTM A276/A479 Alloy 2205 or A995 4A
4	Stem	ASTM A276/A479 Alloy 2205
5	Packing Gland	ASTM A276 Type 316
6	Stem Seals	PTFE
7	Seats	TFM 1700
8	Gland Screws	ASTM A193 B8 Class 1
9	Gland Plate	316 Stainless Steel
10	Adapter Screw	18-8 Stainless Steel
11	Lever	316 Stainless Steel
12	Stem Bearing	RPTFE
13	Stop	ASTM A276 Type 316
14	Stop Screw	316 Stainless Steel
15	Lock Plate	302 or 304 Stainless Steel
16	Body Seal	RPTFE
17	Grounding Spring	Stainless Steel
18	Body Joint Stud	ASTM A193 Grade B8M
19	Body Joint Nut	ASTM A194 Grade 8
20	Lockwasher	302 or 304 Stainless Steel

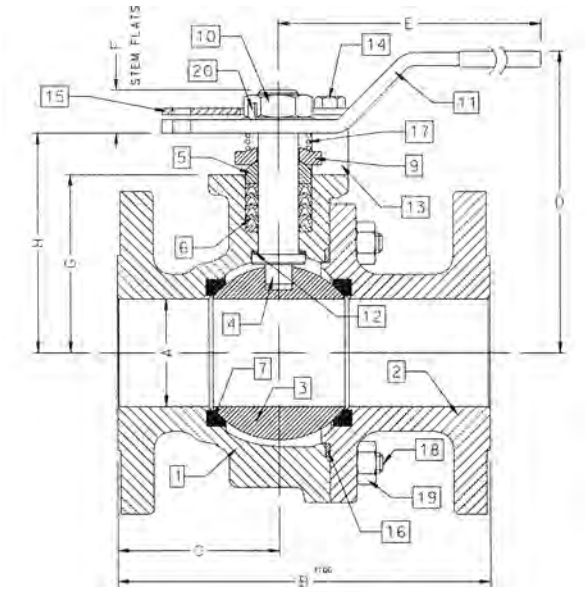

ACTUATOR MOUNTING

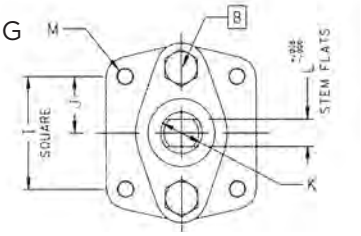

VARIATIONS AVAILABLE

- 87H - Hastelloy
- 87M - Monel
- 87N - Nickel
- 87S - 304L Stainless Steel

OPTIONS AVAILABLE

(MORE INFORMATION IN SECTION J)

- Minimum quantities apply.
- To specify an option, replace the "01" standard suffix with the suffix of the option.
- To specify multiple options, replace the "01" suffix with the desired suffixes in the numerical order shown below. NOTE: Not all suffixes can be combined together.

(SUFFIX)	OPTION
-01	Standard Configuration
-04-	2-1/4" Stem Extension (Carbon Steel, Zinc Plated)
-14-	Side Vented Ball (Uni-Directional)
-21-	UHMWPE Seats
-24-	Graphite Packing, Spiral Wound Graphite Body Seal, RPTFE Bearing (Fire Safe "By Design")
-35-	PTFE Seats and Seals
-38-	PEEK Seats and Graphite Packing
-49-	No Lubrication. Assembled Dry
-57-	Oxygen Cleaned
-65-	MPTFE Seats and Graphite Packing (Fire Safe)
-69-	Drilled and Tapped Purge Ports with Plugs
-70-	4" Extended Bonnet
-73-	316 Stainless Steel Spiral Wound Gaskets with PTFE Filler
-76-	Live Loaded (Lever)
-77-	Live Loaded (Gear, Actuator)
-80-	TFM 1600 Seats, PTFE Chevron Packing, Spiral Wound PTFE Body Seal, PEEK Bearing
-82-	Flat Face Flanges
-MG-	Gear Operator with Standard Handwheel
-90-	Double Packed 4" Extended Bonnet
-9P-	Double Packed 4" Extended Bonnet with Monitoring Port
-CE-	CE Marking. See Page D-3 "Product Approvals" for Availability
-EF-	Graphite Packing (API 641 Compliant)
-EP-	Garlock EVSP Stem Packing with Spiral Wound Graphite Gasket (Fire Safe by Design)
-KF-	PCTFE Stem Bearing
-MH-	Gear Operator with Standard Handwheel & Locking Device
-MJ-	Gear Operator with Oversize Handwheel
-MK-	Gear Operator with Oversize Handwheel & Locking Device
-MP-	Positive Material Identification
-TC-	With Test Certificate
-TD-	Tested to API Spec 6D
-ZP1-	Fugitive Emissions Packing (Viton)
-ZP2-	Fugitive Emissions Packing (Buna-N)
-ZP3-	Fugitive Emissions Packing (Kalrez)

Pressure/Temperature Ratings - Page M-28, Graph No. 40

DIMENSIONS

PART NO.	SIZE	A	B	C	D	E	F	G	H	I	J	K	L	M	WT.
87J-207-01	1-1/2"	1.50	6.50	3.00	4.62	6.65	0.72	2.41	3.09	1.949	0.974	0.625	0.412	5/16-18	14
87J-208-01	2"	2.00	7.00	3.04	5.61	8.41	0.80	3.31	4.08	1.949	0.974	0.750	0.477	5/16-18	25
87J-209-01	2-1/2"	2.50	7.50	3.34	6.24	8.41	0.80	3.94	4.71	1.949	0.974	0.750	0.477	5/16-18	30

REV. 18JUL19

aalberts integrated piping systems

87J-200 SERIES

DUPLEX STAINLESS STEEL ASME CLASS 150 FLANGED FULL PORT BALL VALVE
3" THRU 6"

5 YEAR WARRANTY MADE IN USA

FOR STANDARDS COMPLIANCE AND STANDARD FEATURES REFER TO PAGE D-3.

STANDARD MATERIAL LIST

	PART	MATERIAL
1	Body	ASTM A995 4A
2	Retainer	ASTM A995 4A
3	Ball	ASTM A276/A479 Alloy 2205 or A995 4A
4	Stem	ASTM A276/A479 Alloy 2205
5	Packing Gland	ASTM A276 Type 316
6	Stem Seals	PTFE
7	Seats	TFM 1700
8	Gland Screws	ASTM A193 B8 Class 1
9	Gland Plate	316 Stainless Steel
10	Adapter Screw	18-8 Stainless Steel
11	Handle Adapter	316 with Vinyl Grip
12	Stem Bearing	RPTFE
13	Stop	ASTM A276 Type 316
14	Stop Screw	316 Stainless Steel
15	Lock Plate	302 or 304 Stainless Steel
16	Body Seal	RPTFE
17	Grounding Spring	Stainless Steel
18	Body Joint Stud	ASTM A193 Grade B8M
19	Body Joint Nut	ASTM A194 Grade 8
20	Pipe Handle	Galvanized Steel (not shown)

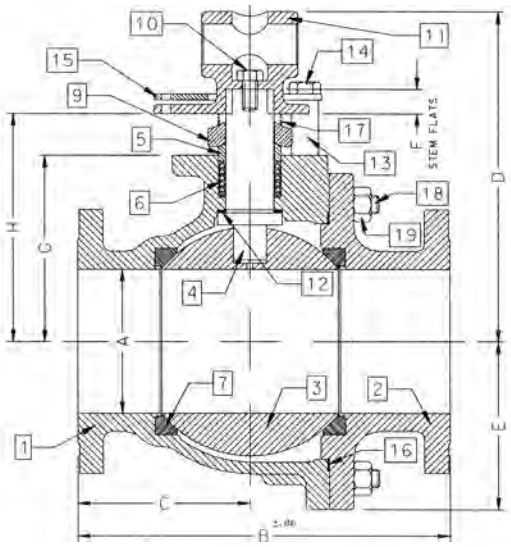

ACTUATOR MOUNTING

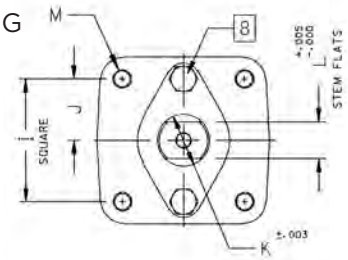

VARIATIONS AVAILABLE

- 87H - Hastelloy
- 87N - Nickel
- 87S - 304L Stainless Steel

OPTIONS AVAILABLE

(MORE INFORMATION IN SECTION J)

- Minimum quantities apply.
- To specify an option, replace the "01" standard suffix with the suffix of the option.
- To specify multiple options, replace the "01" suffix with the desired suffixes in the numerical order shown below. NOTE: Not all suffixes can be combined together.

(SUFFIX)	OPTION
-01	Standard Configuration
-14-	Side Vented Ball (Uni-Directional)
-21-	UHMWPE Seats
-24-	Graphite Packing, Spiral Wound Graphite Body Seal, RPTFE Bearing (Fire Safe "By Design")
-35-	PTFE Seats and Seals
-38-	PEEK Seats and Graphite Packing
-49-	No Lubrication. Assembled Dry
-57-	Oxygen Cleaned
-65-	MPTFE Seats and Graphite Packing (Fire Safe)
-69-	Drilled and Tapped Purge Ports with Plugs
-70-	4" Extended Bonnet
-73-	316 Stainless Steel Spiral Wound Gaskets with PTFE Filler
-76-	Live Loaded (Lever)
-77-	Live Loaded (Gear, Actuator)
-80-	TFM 1600 Seats, PTFE Chevron Packing, Spiral Wound PTFE Body Seal, PEEK Bearing
-82-	Flat Face Flanges
-90-	Double Packed 4" Extended Bonnet
-9P-	Double Packed 4" Extended Bonnet with Monitoring Port
-CE-	CE Marking. See Page D-3 "Product Approvals" for Availability
-EF-	Graphite Packing (API 641 Compliant)
-EP-	Garlock EVSP Stem Packing with Spiral Wound Graphite Gasket (Fire Safe by Design)
-KF-	PCTFE Stem Bearing
-MG-	Gear Operator with Standard Handwheel
-MH-	Gear Operator with Standard Handwheel & Locking Device
-MJ-	Gear Operator with Oversize Handwheel
-MK-	Gear Operator with Oversize Handwheel & Locking Device
-MP-	Positive Material Identification
-TC-	With Test Certificate
-TD-	Tested to API Spec 6D
-ZP1-	Fugitive Emissions Packing (Viton)
-ZP2-	Fugitive Emissions Packing (Buna-N)
-ZP3-	Fugitive Emissions Packing (Kalrez)

Pressure/Temperature Ratings - Page M-28, Graph No. 40

DIMENSIONS

PART NO.	SIZE	A	B	C	D	E	F	G	H	I	J	K	L	M	WT.
87J-200-01	3"	3.00	8.00	3.68	8.80	3.88	0.50	4.75	5.95	2.840	1.420	1.250	0.725	3/8-16	60
87J-20A-01	4"	4.00	9.00	3.94	9.99	5.13	0.50	5.94	7.13	2.840	1.420	1.250	0.725	3/8-16	91
87J-20C-01	6"	6.00	15.50	7.19	13.73	7.00	1.00	7.75	9.48	4.596	2.298	2.000	1.375	3/4-10	248

REV. 18JUL19

87J-200 SERIES

DUPLEX STAINLESS STEEL ASME CLASS 150 FLANGED FULL PORT BALL VALVE
8" THRU 12"

5 YEAR WARRANTY MADE IN USA

FOR STANDARDS COMPLIANCE AND STANDARD FEATURES REFER TO PAGE D-3.

STANDARD MATERIAL LIST

	PART	MATERIAL
1	Body	ASTM A995 4A
2	Retainer	ASTM A995 4A
3	Ball	ASTM A276/A479 Alloy 2205 or A995 4A
4	Stem	ASTM A276/A479 Alloy 2205
5	Packing Gland	ASTM A276 Type 316
6	Stem Seals	PTFE
7	Seats	TFM 1700
8	Gland Screws	ASTM A193 B8 Class 1
9	Gland Plate	316 Stainless Steel
10	Stem Bearing	RPTFE
11	Body Seal	RPTFE
12	Body Joint Stud	ASTM A193 Grade B8M
13	Body Joint Nut	ASTM A194 Grade 8

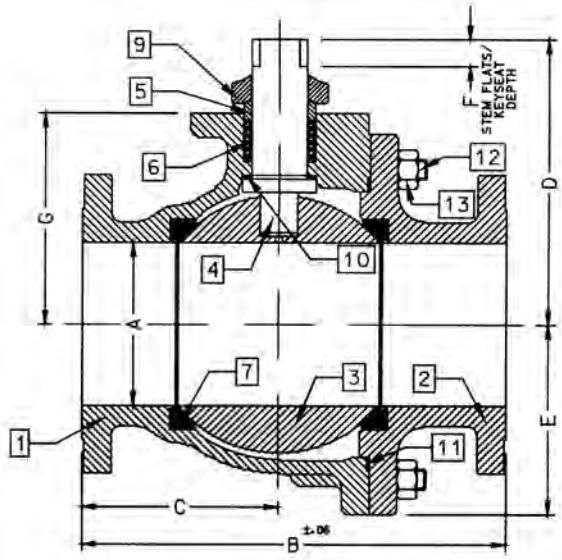

VARIATIONS AVAILABLE

- 87H - Hastelloy
- 87N - Nickel
- 87S - 304L Stainless Steel

OPTIONS AVAILABLE

(MORE INFORMATION IN SECTION J)

- Minimum quantities apply.
- To specify an option, replace the "01" standard suffix with the suffix of the option.
- To specify multiple options, replace the "01" suffix with the desired suffixes in the numerical order shown below. NOTE: Not all suffixes can be combined together.

(SUFFIX)	OPTION
-01	Standard Configuration
-14-	Side Vented Ball (Uni-Directional)
-21-	UHMWPE Seats
-24-	Graphite Packing, Spiral Wound Graphite Body Seal, RPTFE Bearing (Fire Safe "By Design")
-35-	PTFE Seats and Seals
-49-	No Lubrication. Assembled Dry
-57-	Oxygen Cleaned
-65-	MPTFE Seats and Graphite Packing (Fire Safe)
-69-	Drilled and Tapped Purge Ports with Plugs
-70-	4" Extended Bonnet (8" Only)
-77-	Live Loaded (Gear, Actuator)
-80-	TFM 1600 Seats, PTFE Chevron Packing, Spiral Wound PTFE Body Seal, PEEK Bearing
-82-	Flat Face Flanges
-90-	Double Packed 4" Extended Bonnet
-9P-	Double Packed 4" Extended Bonnet with Monitoring Port
-CE-	CE Marking. See Page D-3 "Product Approvals" for Availability
-EF-	Graphite Packing (API 641 Compliant)
-EP-	Garlock EVSP Stem Packing with Spiral Wound Graphite Gasket (Fire Safe by Design)
-KF-	PCTFE Stem Bearing
-MG-	Gear Operator with Standard Handwheel
-MH-	Gear Operator with Standard Handwheel & Locking Device
-MJ-	Gear Operator with Oversize Handwheel
-MK-	Gear Operator with Oversize Handwheel & Locking Device
-MP-	Positive Material Identification
-TC-	With Test Certificate
-TD-	Tested to API Spec 6D
-ZP1-	Fugitive Emissions Packing (Viton)
-ZP2-	Fugitive Emissions Packing (Buna-N)
-ZP3-	Fugitive Emissions Packing (Kalrez)

Pressure/Temperature Ratings - Page M-28, Graph No. 40

ACTUATOR MOUNTING

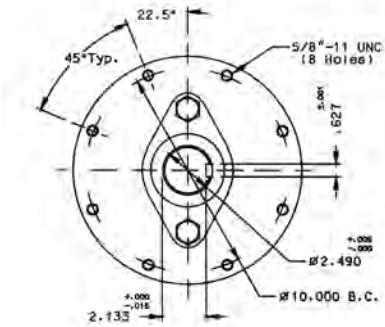

10" & 12"

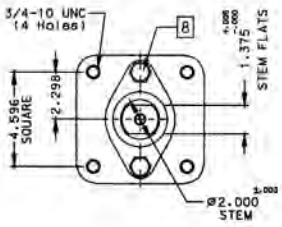

8"

DIMENSIONS

PART NO.	SIZE	A	B	C	D	E	F	G
87J-20E-01	8"	8.00	18.00	8.88	12.83	9.18	1.00	10.22
87J-20G-01	10"	10.00	21.00	10.26	18.57	11.33	2.31	12.80
87J-20H-01	12"	12.00	24.00	12.09	20.31	13.40	2.31	14.92

REV. 18JUL19

aalberts integrated piping systems

87J-700 SERIES

DUPLEX STAINLESS STEEL ASME CLASS 300 FLANGED STD. PORT BALL VALVE
1-1/2" THRU 2"

5 YEAR WARRANTY MADE IN USA

FOR STANDARDS COMPLIANCE AND STANDARD FEATURES REFER TO PAGE D-3.

STANDARD MATERIAL LIST

	PART	MATERIAL
1	Body	ASTM A995 4A
2	Retainer	ASTM A995 4A
3	Ball	ASTM A276/A479 Alloy 2205
4	Stem	ASTM A276/A479 Alloy 2205
5	Packing Gland	ASTM A276 Type 316
6	Stem Seals	PTFE
7	Seats	TFM 1700
8	Gland Screws	ASTM A193 B8 Class 1
9	Gland Plate	302 & 304 Stainless Steel
10	Stem Nut	ASTM A194 Grade 8
11	Lever	302 & 304 Stainless Steel with Vinyl Grip
12	Stem Bearing	RPTFE
13	Stop	ASTM A276 Type 316
14	Stop Screw	18-8 Stainless Steel
15	Lock Plate	302 or 304 Stainless Steel
16	Body Seal	RPTFE
17	Lockwasher	302 or 304 Stainless Steel
18	Grounding Spring	Stainless Steel, ASTM A313

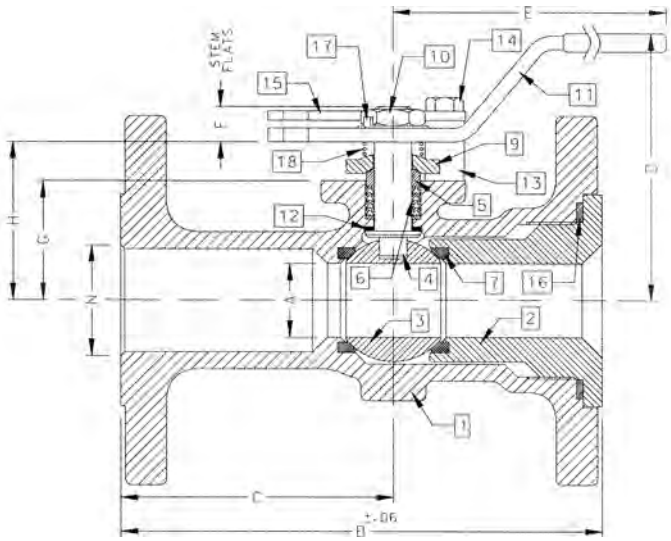

ACTUATOR MOUNTING

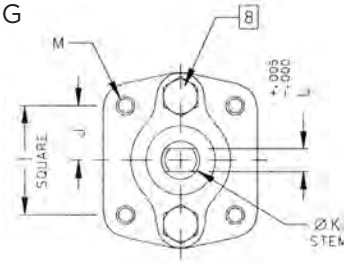

VARIATIONS AVAILABLE

- 87H - Hastelloy
- 87M - Monel
- 87N - Nickel
- 87S - 304L Stainless Steel

OPTIONS AVAILABLE

(MORE INFORMATION IN SECTION J)

- Minimum quantities apply.
- To specify an option, replace the "01" standard suffix with the suffix of the option.
- To specify multiple options, replace the "01" suffix with the desired suffixes in the numerical order shown below. NOTE: Not all suffixes can be combined together.

(SUFFIX)	OPTION
-01	Standard Configuration
-04-	2-1/4" Stem Extension (Carbon Steel, Zinc Plated)
-14-	Side Vented Ball (See Page J-2)
-15-	Wheel Handle, Steel
-21-	UHMWPE Seats
-24-	Graphite Packing, Spiral Wound Graphite Body Seal, RPTFE Bearing (Fire Safe "By Design")
-35-	PTFE Seats and Seals
-38-	PEEK Seats and Graphite Packing
-49-	No Lubrication. Assembled Dry
-57-	Oxygen Cleaned
-65-	MPTFE Seats and Graphite Packing (Fire Safe)
-69-	Drilled and Tapped Purge Ports with Plugs
-70-	4" Extended Bonnet
-73-	316 Stainless Steel Spiral Wound Gaskets with PTFE Filler
-76-	Live Loaded (Lever)
-77-	Live Loaded (Gear, Actuator)
-80-	TFM 1600 Seats, PTFE Chevron Packing, Spiral Wound PTFE Body Seal, PEEK Bearing
-82-	Flat Face Flanges
-90-	Double Packed 4" Extended Bonnet
-9P-	Double Packed 4" Extended Bonnet with Monitoring Port
-CE-	CE Marking. See Page D-3 "Product Approvals" for Availability
-EF-	Graphite Packing (API 641 Compliant)
-EP-	Garlock EVSP Stem Packing with Spiral Wound Graphite Gasket (Fire Safe by Design)
-KF-	PCTFE Stem Bearing
-MP-	Positive Material Identification
-TC-	With Test Certificate
-TD-	Tested to API Spec 6D
-ZP1-	Fugitive Emissions Packing (Viton)
-ZP2-	Fugitive Emissions Packing (Buna-N)
-ZP3-	Fugitive Emissions Packing (Kalrez)

Pressure/Temperature Ratings - Page M-28, Graph No. 41

DIMENSIONS

PART NO.	SIZE	A	B	C	D	E	F	G	H	I	J	K	L	M	N	WT.
87J-707-01A	1-1/2"	1.25	7.50	4.50	4.85	6.53	0.47	1.85	2.38	1.392	0.696	0.500	0.287	1/4-20	1.50	15.7
87J-708-01	2"	1.50	8.50	5.19	4.62	6.65	0.72	2.41	3.09	1.949	0.974	0.625	0.412	5/16-18	2.00	24.0

REV. 18JUL19

87J-700 SERIES

DUPLEX STAINLESS STEEL ASME CLASS 300 FLANGED STD. PORT BALL VALVE
2-1/2" THRU 3"

5 YEAR WARRANTY MADE IN USA

FOR STANDARDS COMPLIANCE AND STANDARD FEATURES REFER TO PAGE D-3.

STANDARD MATERIAL LIST

	PART	MATERIAL
1	Body	ASTM A995 4A
2	Retainer	ASTM A995 4A
3	Ball	ASTM A276/A479 Alloy 2205 or A995 4A
4	Stem	ASTM A276/A479 Alloy 2205
5	Packing Gland	ASTM A276 Type 316
6	Stem Seals	PTFE
7	Seats	TFM 1700
8	Gland Screws	ASTM A193 B8 Class 1
9	Gland Plate	316 Stainless Steel
10	Stem Nut	ASTM A194 Grade 8 Stainless Steel
11	Lever	316 Stainless Steel
12	Stem Bearing	RPTFE
13	Stop	ASTM A276 Type 316
14	Stop Screw	316 Stainless Steel
15	Lock Plate	302 or 304 Stainless Steel
16	Body Seal	RPTFE
17	Grounding Spring	Stainless Steel, ASTM A313
18	Body Joint Stud	ASTM A193 Grade B8M
19	Body Joint Nut	ASTM A194 Grade 8
20	Lockwasher	302 or 304 Stainless Steel

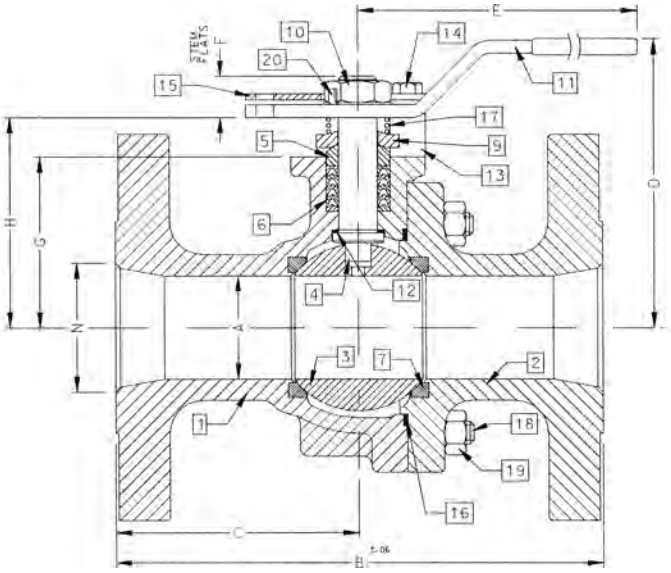

ACTUATOR MOUNTING

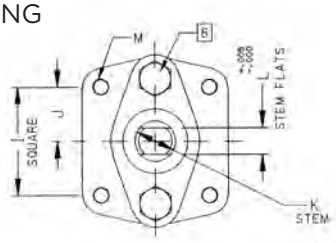

VARIATIONS AVAILABLE

- 87H - Hastelloy
- 87N - Nickel
- 87S - 304L Stainless Steel

OPTIONS AVAILABLE

(MORE INFORMATION IN SECTION J)

- Minimum quantities apply.
- To specify an option, replace the "01" standard suffix with the suffix of the option.
- To specify multiple options, replace the "01" suffix with the desired suffixes in the numerical order shown below. NOTE: Not all suffixes can be combined together.

(SUFFIX)	OPTION
-01	Standard Configuration
-04-	2-1/4" Stem Extension (Carbon Steel, Zinc Plated)
-14-	Side Vented Ball (Uni-Directional)
-21-	UHMWPE Seats
-24-	Graphite Packing, Spiral Wound Graphite Body Seal, RPTFE Bearing (Fire Safe "By Design")
-35-	PTFE Seats and Seals
-38-	PEEK Seats and Graphite Packing
-49-	No Lubrication. Assembled Dry
-57-	Oxygen Cleaned
-65-	MPTFE Seats and Graphite Packing (Fire Safe)
-69-	Drilled and Tapped Purge Ports with Plugs
-70-	4" Extended Bonnet
-73-	316 Stainless Steel Spiral Wound Gaskets with PTFE Filler
-76-	Live Loaded (Lever)
-77-	Live Loaded (Gear, Actuator)
-80-	TFM 1600 Seats, PTFE Chevron Packing, Spiral Wound PTFE Body Seal, PEEK Bearing
-82-	Flat Face Flanges
-90-	Double Packed 4" Extended Bonnet
-9P-	Double Packed 4" Extended Bonnet with Monitoring Port
-CE-	CE Marking. See Page D-3 "Product Approvals" for Availability
-EF-	Graphite Packing (API 641 Compliant)
-EP-	Garlock EVSP Stem Packing with Spiral Wound Graphite Gasket (Fire Safe by Design)
-KF-	PCTFE Stem Bearing
-MG-	Gear Operator with Standard Handwheel
-MH-	Gear Operator with Standard Handwheel & Locking Device
-MJ-	Gear Operator with Oversize Handwheel
-MK-	Gear Operator with Oversize Handwheel & Locking Device
-MP-	Positive Material Identification
-TC-	With Test Certificate
-TD-	Tested to API Spec 6D
-ZP1-	Fugitive Emissions Packing (Viton)
-ZP2-	Fugitive Emissions Packing (Buna-N)
-ZP3-	Fugitive Emissions Packing (Kalrez)

Pressure/Temperature Ratings - Page M-28, Graph No. 41

DIMENSIONS

PART NO.	SIZE	A	B	C	D	E	F	G	H	I	J	K	L	M	N	WT.
87J-709-01	2-1/2"	2.00	9.50	4.75	5.61	8.41	0.80	3.31	4.08	1.949	0.974	0.750	0.477	5/16-18	2.50	39
87J-700-01	3"	2.50	11.12	5.56	6.24	8.41	0.80	3.94	4.71	1.949	0.974	0.750	0.477	5/16-18	3.00	55

REV. 18JUL19

aalberts integrated piping systems

87J-700 SERIES

DUPLEX STAINLESS STEEL ASME CLASS 300 FLANGED STD. PORT BALL VALVE
4" THRU 8"

5 YEAR WARRANTY MADE IN USA

FOR STANDARDS COMPLIANCE AND STANDARD FEATURES REFER TO PAGE D-3.

STANDARD MATERIAL LIST

	PART	MATERIAL
1	Body	ASTM A995 4A
2	Retainer	ASTM A995 4A
3	Ball	ASTM A276/A479 Alloy 2205 or A995 4A
4	Stem	ASTM A276/A479 Alloy 2205
5	Packing Gland	ASTM A276 Type 316
6	Stem Seals	PTFE
7	Seats	TFM 1700
8	Gland Screws	ASTM A193 B8 Class 1
9	Gland Plate	316 Stainless Steel
10	Adapter Screw	18-8 Stainless Steel
11	Handle Adapter	316 Stainless Steel
12	Stem Bearing	RPTFE
13	Stop	ASTM A276 Type 316
14	Stop Screw	316 Stainless Steel
15	Lock Plate	302 or 304 Stainless Steel
16	Body Seal	RPTFE
17	Grounding Spring	Stainless Steel, ASTM 313
18	Body Joint Stud	ASTM A193 Grade B8M
19	Body Joint Nut	ASTM A194 Grade 8
20	Adapter Screw	302 or 304 Stainless Steel
21	Pipe Handle	Galvanized Steel (not Shown)

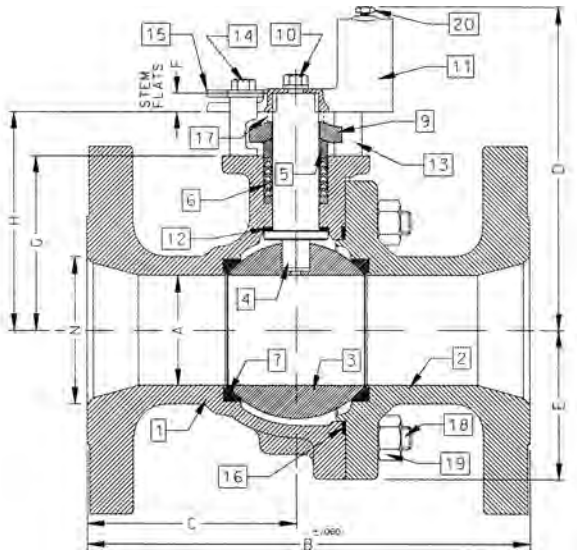

ACTUATOR MOUNTING

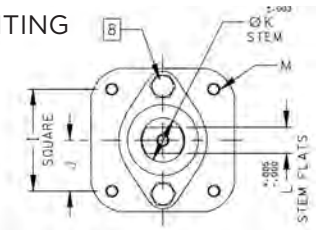

VARIATIONS AVAILABLE

- 87H - Hastelloy
- 87N - Nickel
- 87S - 304L Stainless Steel

OPTIONS AVAILABLE

(MORE INFORMATION IN SECTION J)

- Minimum quantities apply.
- To specify an option, replace the "01" standard suffix with the suffix of the option.
- To specify multiple options, replace the "01" suffix with the desired suffixes in the numerical order shown below. NOTE: Not all suffixes can be combined together.

(SUFFIX)	OPTION
-01	Standard Configuration
-14-	Side Vented Ball (Uni-Directional)
-21-	UHMWPE Seats
-24-	Graphite Packing, Spiral Wound Graphite Body Seal, RPTFE Bearing (Fire Safe "By Design")
-35-	PTFE Seats and Seals
-49-	No Lubrication. Assembled Dry
-57-	Oxygen Cleaned
-65-	MPTFE Seats and Graphite Packing (Fire Safe)
-69-	Drilled and Tapped Purge Ports with Plugs
-70-	4" Extended Bonnet
-73-	316 Stainless Steel Spiral Wound Gaskets with PTFE Filler
-76-	Live Loaded (Lever)
-77-	Live Loaded (Gear, Actuator)
-80-	TFM 1600 Seats, PTFE Chevron Packing, Spiral Wound PTFE Body Seal, PEEK Bearing
-82-	Flat Face Flanges
-90-	Double Packed 4" Extended Bonnet
-9P-	Double Packed 4" Extended Bonnet with Monitoring Port
-CE-	CE Marking. See Page D-3 "Product Approvals" for Availability
-EF-	Graphite Packing (API 641 Compliant)
-EP-	Garlock EVSP Stem Packing with Spiral Wound Graphite Gasket (Fire Safe by Design)
-KF-	PCTFE Stem Bearing
-MG-	Gear Operator with Standard Handwheel
-MH-	Gear Operator with Standard Handwheel & Locking Device
-MJ-	Gear Operator with Oversize Handwheel
-MK-	Gear Operator with Oversize Handwheel & Locking Device
-MP-	Positive Material Identification
-TC-	With Test Certificate
-TD-	Tested to API Spec 6D
-ZP1-	Fugitive Emissions Packing (Viton)
-ZP2-	Fugitive Emissions Packing (Buna-N)
-ZP3-	Fugitive Emissions Packing (Kalrez)

Pressure/Temperature Ratings - Page M-28, Graph No. 41

DIMENSIONS

PART NO.	SIZE	A	B	C	D	E	F	G	H	I	J	K	L	M	N	WT.
87J-70A-01	4"	3.00	12.00	5.68	8.80	4.06	0.50	4.75	5.95	2.840	1.420	1.250	0.725	3/8-16	4.00	95
87J-70C-01	6"	4.00	15.88	7.38	9.99	5.25	0.50	5.94	7.13	2.840	1.420	1.250	0.725	3/8-16	6.00	187
87J-70E-01	8"	6.00	19.75	9.00	13.73	7.30	1.00	7.75	9.48	4.596	2.298	2.000	1.375	3/4-10	8.00	400

REV. 18JUL19

87J-700 SERIES

DUPLEX STAINLESS STEEL ASME CLASS 300 FLANGED STD. PORT BALL VALVE
10"

5 YR WARRANTY MADE IN USA

FOR STANDARDS COMPLIANCE AND STANDARD FEATURES REFER TO PAGE D-3.

STANDARD MATERIAL LIST

	PART	MATERIAL
1	Body	ASTM A995 4A
2	Retainer	ASTM A995 4A
3	Ball	ASTM A276/A479 Alloy 2205 or A995 4A
4	Stem	ASTM A276/A479 Alloy 2205
5	Packing Gland	ASTM A276 Type 316
6	Stem Seals	PTFE
7	Seats	TFM 1700
8	Gland Screws	ASTM A193 B8 Class 1
9	Gland Plate	316 Stainless Steel
10	Stem Bearing	RPTFE
11	Body Seal	RPTFE
12	Body Joint Stud	ASTM A193 Grade B8M
13	Body Joint Nut	ASTM A194 Grade 8

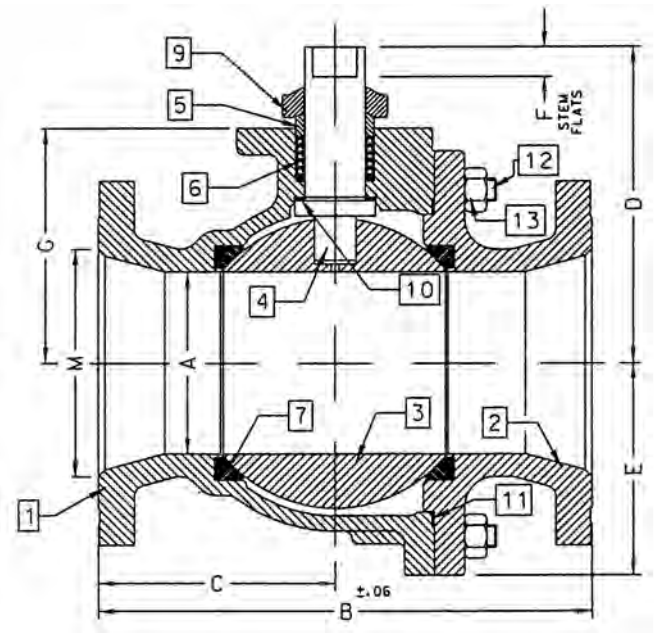

ACTUATOR MOUNTING

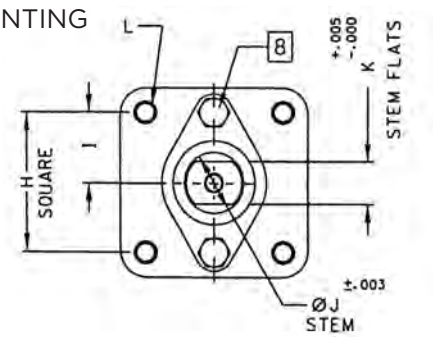

VARIATIONS AVAILABLE

- 87H - Hastelloy
- 87N - Nickel
- 87S - 304L Stainless Steel

OPTIONS AVAILABLE

(MORE INFORMATION IN SECTION J)

- Minimum quantities apply.
- To specify an option, replace the "01" standard suffix with the suffix of the option.
- To specify multiple options, replace the "01" suffix with the desired suffixes in the numerical order shown below. NOTE: Not all suffixes can be combined together.

(SUFFIX)	OPTION
-01	Standard Configuration (Less Gear Operator)
-14-	Side Vented Ball (See Page J2)
-21-	UHMWPE Seats
-24-	Graphite Packing, Spiral Wound Graphite Body Seal, RPTFE Bearing (Fire Safe "By Design")
-35-	PTFE Seats and Seals
-49-	No Lubrication. Assembled Dry
-57-	Oxygen Cleaned
-65-	MPTFE Seats and Graphite Packing (Fire Safe)
-69-	Drilled and Tapped Purge Ports with Plugs
-70-	4" Extended Bonnet
-77-	Live Loaded 87A/88A Series (Gear, Actuator)
-80-	TFM 1600 Seats, PTFE Chevron Packing, Spiral Wound PTFE Body Seal PEEK Bearing
-82-	Flat Face Flanges
-90-	Double Packed 4" Extended Bonnet
-9P-	Double Packed 4" Extended Bonnet with Monitoring Port
-CE-	CE Marking. See Page D-3 "Product Approvals" for Availability
-EF-	Graphite Packing (API 641 Compliant)
-EP-	Garlock EVSP Stem Packing with Spiral Wound Graphite Gasket (Fire Safe by Design)
-KF-	PCTFE Stem Bearing
-MG-	Gear Operator with Standard Handwheel
-MH-	Gear Operator with Standard Handwheel & Locking Device
-MJ-	Gear Operator with Oversize Handwheel
-MK-	Gear Operator with Oversize Handwheel & Locking Device
-MP-	Positive Material Identification
-TC-	With Test Certificate
-TD-	Tested to API Spec 6D
-ZP1-	Fugitive Emissions Packing (Viton)
-ZP2-	Fugitive Emissions Packing (Buna-N)
-ZP3-	Fugitive Emissions Packing (Kalrez)

Pressure/Temperature Ratings - Page M-28, Graph No. 41

DIMENSIONS

PART NO.	SIZE	A	B	C	D	E	F	G	H	I	J	K	L	M
87J-70G-01	10"	8.00	22.38	10.69	12.83	9.56	1.00	10.22	4.596	2.298	2.000	1.375	3/4-10	10.00

REV. 18JUL19

aalberts integrated piping systems

87J-900 SERIES

DUPLEX STAINLESS STEEL ASME CLASS 300 FLANGED FULL PORT BALL VALVE
1/2" THRU 1"

5 YEAR WARRANTY MADE IN USA

FOR STANDARDS COMPLIANCE AND STANDARD FEATURES REFER TO PAGE D-3.

STANDARD MATERIAL LIST

	PART	MATERIAL
1	Body	ASTM A995 4A
2	Retainer	ASTM A276/A479 Alloy 2205
3	Ball	ASTM A276/A479 Alloy 2205
4	Stem	ASTM A276/A479 Alloy 2205
5	Packing Gland	ASTM A276 Type 316
6	Stem Seals	PTFE
7	Seats	TFM 1700
8	Gland Screws	ASTM A193 B8 Class 1
9	Gland Plate	302 or 304 Stainless Steel
10	Stem Nut	316 Stainless Steel
11	Lever	302 or 304 with Vinyl Grip
12	Stem Bearing	RPTFE
13	Stop	ASTM A276 Type 316
14	Stop Screw	18-8 Stainless Steel
15	Lock Plate	302 or 304 Stainless Steel
16	Body Seal	RPTFE
17	Lockwasher	302 or 304 Stainless Steel
18	Grounding Spring	Stainless Steel, ASTM A313

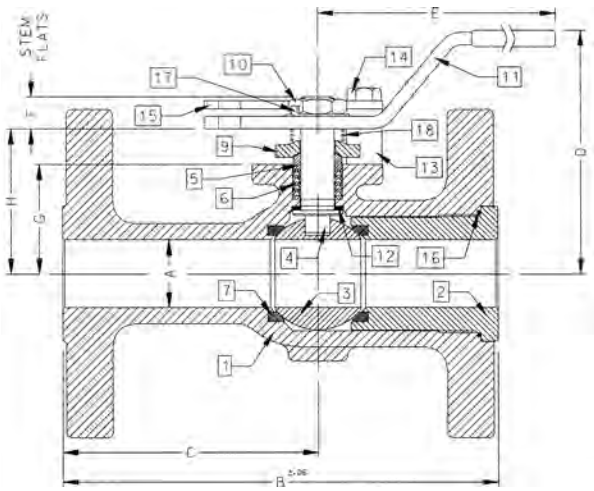

ACTUATOR MOUNTING

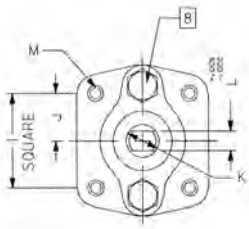

VARIATIONS AVAILABLE

- 87H - Hastelloy
- 87M - Monel
- 87N - Nickel
- 87S - 304L Stainless Steel

OPTIONS AVAILABLE

(MORE INFORMATION IN SECTION J)

- Minimum quantities apply.
- To specify an option, replace the "01" standard suffix with the suffix of the option.
- To specify multiple options, replace the "01" suffix with the desired suffixes in the numerical order shown below. NOTE: Not all suffixes can be combined together.

(SUFFIX)	OPTION
-01	Standard Configuration
-04-	2-1/4" Stem Extension (Carbon Steel, Zinc Plated)
-14-	Side Vented Ball (Uni-Directional)
-15-	Wheel Handle, Steel
-21-	UHMWPE Seats
-24-	Graphite Packing, Spiral Wound Graphite Body Seal, RPTFE Bearing (Fire Safe "By Design")
-35-	PTFE Seats and Seals
-38-	PEEK Seats and Graphite Packing
-49-	No Lubrication. Assembled Dry
-57-	Oxygen Cleaned
-65-	MPTFE Seats and Graphite Packing (Fire Safe)
-69-	Drilled and Tapped Purge Port with Plugs
-70-	4" Extended Bonnet
-73-	316 Stainless Steel Spiral Wound Gaskets with PTFE Filler
-76-	Live Loaded (Lever)
-77-	Live Loaded (Gear, Actuator)
-80-	TFM 1600 Seats, PTFE Chevron Packing, Spiral Wound PTFE Body Seal, PEEK Bearing
-82-	Flat Face Flanges
-90-	Double Packed 4" Extended Bonnet
-9P-	Double Packed 4" Extended Bonnet with Monitoring Port
-CE-	CE Marking. See Page D-3 "Product Approvals" for Availability
-EF-	Graphite Packing (API 641 Compliant) (Not Available on 1/2" Size)
-EP-	Garlock EVSP Stem Packing with Spiral Wound Graphite Gasket (Fire Safe by Design)
-KF-	PCTFE Stem Bearing
-MP-	Positive Material Identification
-TC-	With Test Certificate
-TD-	Tested to API Spec 6D
-ZP1-	Fugitive Emissions Packing (Viton)
-ZP2-	Fugitive Emissions Packing (Buna-N)
-ZP3-	Fugitive Emissions Packing (Kalrez)

Pressure/Temperature Ratings - Page M-28, Graph No. 41

DIMENSIONS

PART NO.	SIZE	A	B	C	D	E	F	G	H	I	J	K	L	M	WT.
87J-903-01A	1/2"	0.50	5.50	3.31	2.74	5.12	0.24	1.09	1.44	1.000	0.500	0.375	0.245	10-24	6
87J-904-01A	3/4"	0.75	6.00	3.56	3.43	5.54	0.22	1.65	2.13	1.392	0.696	0.500	0.287	1/4-20	9
87J-905-01	1"	1.00	6.50	3.82	4.62	6.53	0.47	1.62	2.15	1.392	0.696	0.500	0.287	1/4-20	11

REV. 10SEP19

87J-900 SERIES

DUPLEX STAINLESS STEEL ASME CLASS 300 FLANGED FULL PORT BALL VALVE
1-1/2" THRU 2-1/2"

5 YEAR WARRANTY MADE IN USA

FOR STANDARDS COMPLIANCE AND STANDARD FEATURES REFER TO PAGE D-3.

STANDARD MATERIAL LIST

	PART	MATERIAL
1	Body	ASTM A995 4A
2	Retainer	ASTM A995 4A
3	Ball	ASTM A276/A479 Alloy 2205 or A995 4A
4	Stem	ASTM A276/A479 Alloy 2205
5	Packing Gland	ASTM A276/A479 Alloy 2205
6	Stem Seals	PTFE
7	Seats	TFM 1700
8	Gland Screws	ASTM A193 B8 Class 1
9	Gland Plate	316 Stainless Steel
10	Stem Nut	18-8 Stainless Steel
11	Lever	316 Stainless Steel
12	Stem Bearing	RPTFE
13	Stop	ASTM A276 Type 316
14	Stop Screw	316 Stainless Steel
15	Lock Plate	302 or 304 Stainless Steel
16	Body Seal	RPTFE
17	Grounding Spring	Stainless Steel, ASTM A313
18	Body Joint Stud	ASTM A193 Grade B8M
19	Body Joint Nut	ASTM A194 Grade 8
20	Lockwasher	302 or 304 Stainless Steel

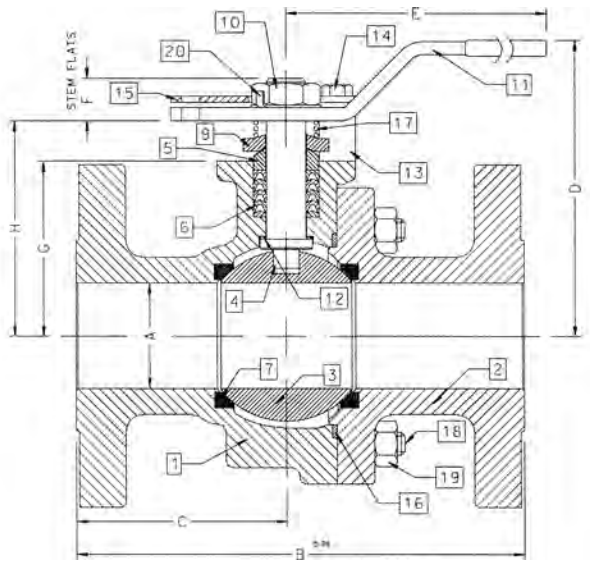

ACTUATOR MOUNTING

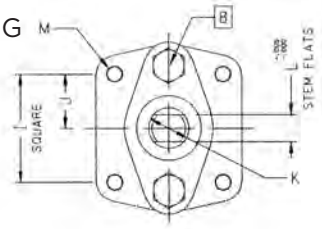

VARIATIONS AVAILABLE

- 87H - Hastelloy
- 87M - Monel
- 87N - Nickel
- 87S - 304L Stainless Steel

OPTIONS AVAILABLE

(MORE INFORMATION IN SECTION J)

- Minimum quantities apply.
- To specify an option, replace the "01" standard suffix with the suffix of the option.
- To specify multiple options, replace the "01" suffix with the desired suffixes in the numerical order shown below. NOTE: Not all suffixes can be combined together.

(SUFFIX)	OPTION
-01	Standard Configuration
-04-	2-1/4" Stem Extension (Carbon Steel, Zinc Plated)
-14-	Side Vented Ball (Uni-Directional)
-21-	UHMWPE Seats
-24-	Graphite Packing, Spiral Wound Graphite Body Seal, RPTFE Bearing (Fire Safe "By Design")
-35-	PTFE Seats and Seals
-38-	PEEK Seats and Graphite Packing (3" Only)
-49-	No Lubrication. Assembled Dry
-57-	Oxygen Cleaned
-65-	MPTFE Seats and Graphite Packing (Fire Safe)
-69-	Drilled and Tapped Purge Ports with Plugs
-70-	4" Extended Bonnet
-73-	316 Stainless Steel Spiral Wound Gaskets with PTFE Filler
-76-	Live Loaded (Lever)
-77-	Live Loaded (Gear, Actuator)
-80-	TFM 1600 Seats, PTFE Chevron Packing, Spiral Wound PTFE Body Seal, PEEK Bearing
-82-	Flat Face Flanges
-90-	Double Packed 4" Extended Bonnet
-9P-	Double Packed 4" Extended Bonnet with Monitoring Port
-CE-	CE Marking. See Page D-3 "Product Approvals" for Availability
-EF-	Graphite Packing (API 641 Compliant)
-EP-	Garlock EVSP Stem Packing with Spiral Wound Graphite Gasket (Fire Safe by Design)
-KF-	PCTFE Stem Bearing
-MG-	Gear Operator with Standard Handwheel
-MH-	Gear Operator with Standard Handwheel & Locking Device
-MJ-	Gear Operator with Oversize Handwheel
-MK-	Gear Operator with Oversize Handwheel & Locking Device
-MP-	Positive Material Identification
-TC-	With Test Certificate
-TD-	Tested to API Spec 6D
-ZP1-	Fugitive Emissions Packing (Viton)
-ZP2-	Fugitive Emissions Packing (Buna-N)
-ZP3-	Fugitive Emissions Packing (Kalrez)

Pressure/Temperature Ratings - Page M-28, Graph No. 41

DIMENSIONS

PART NO.	SIZE	A	B	C	D	E	F	G	H	I	J	K	L	M	WT.
87J-907-01	1-1/2"	1.50	7.50	3.50	4.62	6.65	0.72	2.41	3.09	1.949	0.974	0.625	0.412	5/16-18	21
87J-908-01	2"	2.00	8.50	4.00	5.61	8.41	0.80	3.31	4.08	1.949	0.974	0.750	0.477	5/16-18	37
87J-909-01	2-1/2"	2.50	9.50	4.44	6.24	8.41	0.80	3.94	4.71	1.949	0.974	0.750	0.477	5/16-18	57

REV. 18JUL19

aalberts integrated piping systems

87J-900 SERIES

DUPLEX STAINLESS STEEL ASME CLASS 300 FLANGED FULL PORT BALL VALVE
3" THRU 6"

5 YEAR WARRANTY MADE IN USA

FOR STANDARDS COMPLIANCE AND STANDARD FEATURES REFER TO PAGE D-3.

STANDARD MATERIAL LIST

	PART	MATERIAL
1	Body	ASTM A995 4A
2	Retainer	ASTM A995 4A
3	Ball	ASTM A276/A479 Alloy 2205 or A995 4A
4	Stem	ASTM A276/A479 Alloy 2205
5	Packing Gland	ASTM A276/A479 Alloy 2205
6	Stem Seals	PTFE
7	Seats	TFM 1700
8	Gland Screws	ASTM A193 B8 Class 1
9	Gland Plate	316 Stainless Steel
10	Adapter Screw	18-8 Stainless Steel
11	Handle Adapter	316 Stainless Steel
12	Stem Bearing	RPTFE
13	Stop	ASTM A276 Type 316
14	Stop Screw	316 Stainless Steel
15	Lock Plate	302 or 304 Stainless Steel
16	Body Seal	RPTFE
17	Grounding Spring	Stainless Steel, ASTM A313
18	Body Joint Stud	ASTM A193 Grade B8M
19	Body Joint Nut	ASTM A194 Grade 8
20	Pipe Handle	Galvanized Steel (not shown)

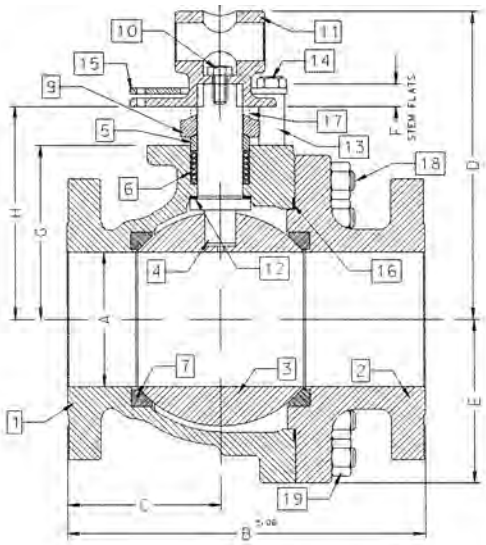

ACTUATOR MOUNTING

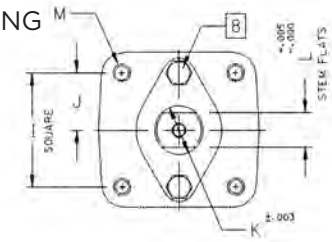

VARIATIONS AVAILABLE

- 87H - Hastelloy
- 87N - Nickel
- 87S - 304L Stainless Steel

OPTIONS AVAILABLE

(MORE INFORMATION IN SECTION J)

- Minimum quantities apply.
- To specify an option, replace the "01" standard suffix with the suffix of the option.
- To specify multiple options, replace the "01" suffix with the desired suffixes in the numerical order shown below. NOTE: Not all suffixes can be combined together.

(SUFFIX)	OPTION
-01	Standard Configuration
-14-	Side Vented Ball (Uni-Directional)
-21-	UHMWPE Seats
-24-	Graphite Packing, Spiral Wound Graphite Body Seal, RPTFE Bearing (Fire Safe "By Design")
-35-	PTFE Seats and Seals
-38-	PEEK Seats and Graphite Packing (3" Only)
-49-	No Lubrication. Assembled Dry
-57-	Oxygen Cleaned
-65-	MPTFE Seats and Graphite Packing (Fire Safe)
-69-	Drilled and Tapped Purge Port with Plugs
-70-	4" Extended Bonnet
-73-	316 Stainless Steel Spiral Wound Gaskets with PTFE Filler
-76-	Live Loaded (Lever)
-77-	Live Loaded (Gear, Actuator)
-80-	TFM 1600 Seats, PTFE Chevron Packing, Spiral Wound PTFE Body Seal, PEEK Bearing
-82-	Flat Face Flanges
-90-	Double Packed 4" Extended Bonnet
-9P-	Double Packed 4" Extended Bonnet with Monitoring Port
-CE-	CE Marking. See Page D-3 "Product Approvals" for Availability
-EF-	Graphite Packing (API 641 Compliant)
-EP-	Garlock EVSP Stem Packing with Spiral Wound Graphite Gasket (Fire Safe by Design)
-KF-	PCTFE Stem Bearing
-MG-	Gear Operator with Standard Handwheel
-MH-	Gear Operator with Standard Handwheel & Locking Device
-MJ-	Gear Operator with Oversize Handwheel
-MK-	Gear Operator with Oversize Handwheel & Locking Device
-MP-	Positive Material Identification
-TC-	With Test Certificate
-TD-	Tested to API Spec 6D
-ZP1-	Fugitive Emissions Packing (Viton)
-ZP2-	Fugitive Emissions Packing (Buna-N)
-ZP3-	Fugitive Emissions Packing (Kalrez)

Pressure/Temperature Ratings - Page M-28, Graph No. 41

DIMENSIONS

PART NO.	SIZE	A	B	C	D	E	F	G	H	I	J	K	L	M	WT.
87J-900-01	3"	3.00	11.12	5.24	8.80	4.06	0.50	4.75	5.95	2.840	1.420	1.250	0.725	3/8-16	78
87J-90A-01	4"	4.00	12.00	5.44	9.99	5.25	0.50	5.94	7.13	2.840	1.420	1.250	0.725	3/8-16	133
87J-90C-01	6"	6.00	15.88	6.82	13.73	7.30	1.00	7.75	9.48	4.596	2.298	2.000	1.375	3/4-10	329

REV. 18JUL19

87J-900 SERIES

DUPLEX STAINLESS STEEL ASME CLASS 300 FLANGED FULL PORT BALL VALVE
8" THRU 12"

5 YEAR WARRANTY MADE IN USA

FOR STANDARDS COMPLIANCE AND STANDARD FEATURES REFER TO PAGE D-3.

STANDARD MATERIAL LIST

	PART	MATERIAL
1	Body	ASTM A995 4A
2	Retainer	ASTM A995 4A
3	Ball	ASTM A276/A479 Alloy 2205 or A995 4A
4	Stem	ASTM A276/A479 Alloy 2205
5	Packing Gland	ASTM A276 Type 316
6	Stem Seals	PTFE
7	Seats	TFM 1700
8	Gland Screws	ASTM A193 B8 Class 1
9	Gland Plate	316 Stainless Steel
10	Stem Bearing	RPTFE
11	Body Seal	RPTFE
12	Body Joint Stud	ASTM A193 Grade B8M
13	Body Joint Nut	ASTM A194 Grade 8

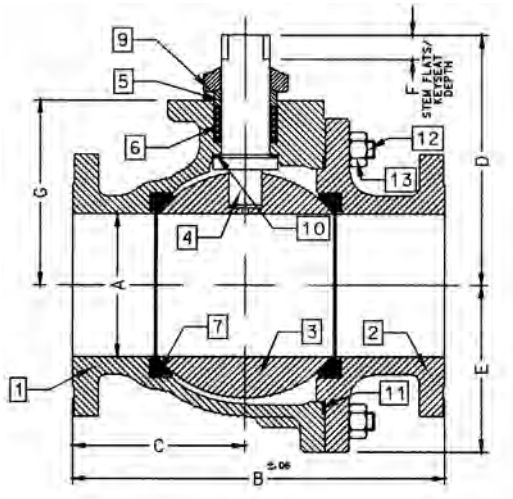

VARIATIONS AVAILABLE

- 87H - Hastelloy
- 87N - Nickel
- 87S - 304L Stainless Steel

OPTIONS AVAILABLE

(MORE INFORMATION IN SECTION J)

- Minimum quantities apply.
- To specify an option, replace the "01" standard suffix with the suffix of the option.
- To specify multiple options, replace the "01" suffix with the desired suffixes in the numerical order shown below. NOTE: Not all suffixes can be combined together.

(SUFFIX)	OPTION
-01	Standard Configuration
-14-	Side Vented Ball (Uni-Directional)
-21-	UHMWPE Seats
-24-	Graphite Packing, Spiral Wound Graphite Body Seal, RPTFE Bearing (Fire Safe "By Design")
-35-	PTFE Seats and Seals
-49-	No Lubrication. Assembled Dry
-57-	Oxygen Cleaned
-65-	MPTFE Seats and Graphite Packing (Fire Safe)
-69-	Drilled and Tapped Purge Ports with Plugs
-70-	4" Extended Bonnet (8" Only)
-77-	Live Loaded (Gear, Actuator)
-80-	TFM 1600 Seats, PTFE Chevron Packing, Spiral Wound PTFE Body Seal, PEEK Bearing
-82-	Flat Face Flanges
-90-	Double Packed 4" Extended Bonnet
-9P-	Double Packed 4" Extended Bonnet with Monitoring Port
-CE-	CE Marking. See Page D-3 "Product Approvals" for Availability
-EF-	Graphite Packing (API 641 Compliant)
-EP-	Garlock EVSP Stem Packing with Spiral Wound Graphite Gasket (Fire Safe by Design)
-KF-	PCTFE Stem Bearing
-MG-	Gear Operator with Standard Handwheel
-MH-	Gear Operator with Standard Handwheel & Locking Device
-MJ-	Gear Operator with Oversize Handwheel
-MK-	Gear Operator with Oversize Handwheel & Locking Device
-MP-	Positive Material Identification
-TC-	With Test Certificate
-TD-	Tested to API Spec 6D
-ZP1-	Fugitive Emissions Packing (Viton)
-ZP2-	Fugitive Emissions Packing (Buna-N)
-ZP3-	Fugitive Emissions Packing (Kalrez)

Pressure/Temperature Ratings - Page M-28, Graph No. 40

ACTUATOR MOUNTING

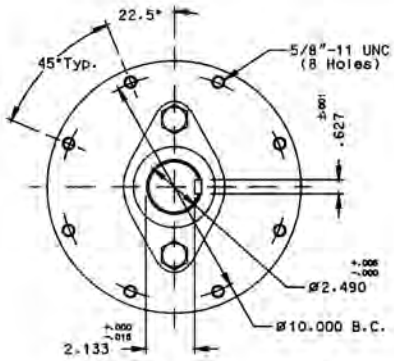

10" & 12"

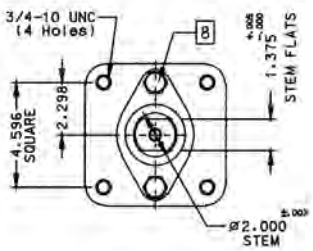

8"

DIMENSIONS

PART NO.	SIZE	A	B	C	D	E	F	G
87J-90E-01	8"	8.00	19.75	9.38	12.83	9.56	1.00	10.22
87J-90G-01	10"	10.00	22.38	10.95	18.57	11.33	2.31	12.80
87J-90H-01	12"	12.00	25.50	12.84	20.31	13.40	2.31	14.92

REV. 18JUL19

aalberts integrated piping systems

87K-100 SERIES

SUPER DUPLEX STAINLESS STEEL ASME CLASS 150 FLANGED STD. PORT BALL VALVE
1-1/2" THRU 2"

5 YEAR WARRANTY MADE IN USA

FOR STANDARDS COMPLIANCE AND STANDARD FEATURES REFER TO PAGE D-3.

STANDARD MATERIAL LIST

	PART	MATERIAL
1	Body	ASTM A995 6A
2	Retainer	ASTM A276/A479 Alloy 2507
3	Ball	ASTM A276/A479 Alloy 2507
4	Stem	ASTM A276/A479 Alloy 2507
5	Packing Gland	ASTM A276 Type 316
6	Stem Seals	PTFE
7	Seats	TFM 1700
8	Gland Screws	ASTM A193 B8 Class 1
9	Gland Plate	302 or 304 Stainless Steel
10	Stem Nut	316 Stainless Steel
11	Lever	302 or 304 Stainless Steel with Vinyl Grip
12	Stem Bearing	RPTFE
13	Stop	ASTM A276 Type 316
14	Stop Screw	18-8 Stainless Steel
15	Lock Plate	302 or 304 Stainless Steel
16	Body Seal	RPTFE
17	Lockwasher	302 or 304 Stainless Steel
18	Grounding Spring	Stainless Steel

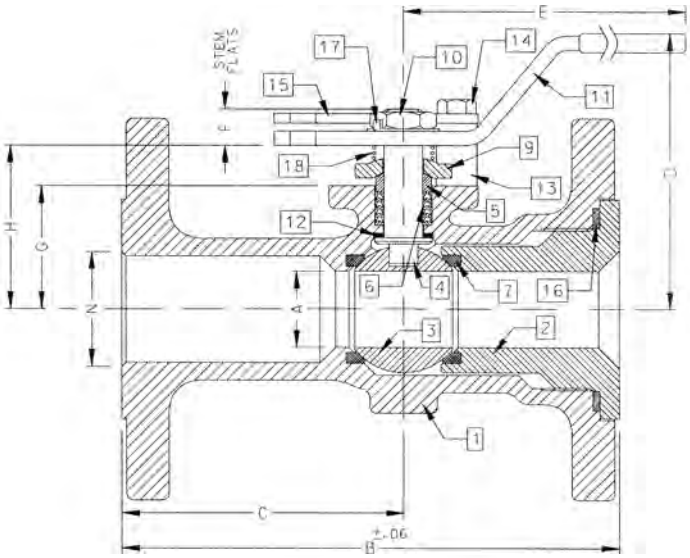

ACTUATOR MOUNTING

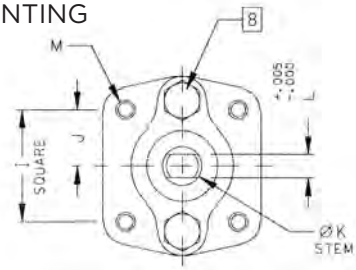

VARIATIONS AVAILABLE

- 87H - Hastelloy
- 87M - Monel (1-1/2" to 2" only)
- 87N - Nickel
- 87S - 304L Stainless Steel

OPTIONS AVAILABLE

(MORE INFORMATION IN SECTION J)

- Minimum quantities apply.
- To specify an option, replace the "01" standard suffix with the suffix of the option.
- To specify multiple options, replace the "01" suffix with the desired suffixes in the numerical order shown below. NOTE: Not all suffixes can be combined together.

(SUFFIX)	OPTION
-01	Standard Configuration
-04-	2-1/4" Stem Extension (Carbon Steel, Zinc Plated)
-14-	Side Vented Ball (Uni-Directional)
-15-	Wheel Handle, Steel
-21-	UHMWPE Seats
-24-	Graphite Packing, Spiral Wound Graphite Body Seal, RPTFE Bearing (Fire Safe "By Design")
-35-	PTFE Seats and Seals
-38-	PEEK Seats and Graphite Packing
-49-	No Lubrication. Assembled Dry
-57-	Oxygen Cleaned
-65-	MPTFE Seats and Graphite Packing (Fire Safe)
-69-	Drilled and Tapped Purge Port with Plug
-70-	4" Extended Bonnet
-73-	316 Stainless Steel Spiral Wound Gaskets with PTFE Filler
-76-	Live Loaded (Lever)
-77-	Live Loaded (Gear, Actuator)
-80-	TFM 1600 Seats, PTFE Chevron Packing, Spiral Wound PTFE Body Seal PEEK Bearing
-82-	Flat Face Flanges
-90-	Double Packed 4" Extended Bonnet
-9P-	Double Packed 4" Extended Bonnet with Monitoring Port
-CE-	CE Marking. See Page D-3 "Product Approvals" for Availability
-EF-	Graphite Packing (API 641 Compliant)
-EP-	Garlock EVSP Stem Packing with Spiral Wound Graphite Gasket (Fire Safe by Design)
-KF-	PCTFE Stem Bearing
-MP-	Positive Material Identification
-TC-	With Test Certificate
-TD-	Tested to API Spec 6D
-ZP1-	Fugitive Emissions Packing (Viton)
-ZP2-	Fugitive Emissions Packing (Buna-N)
-ZP3-	Fugitive Emissions Packing (Kalrez)

Pressure/Temperature Ratings - Page M-28, Graph No. 41

DIMENSIONS

PART NO.	SIZE	A	B	C	D	E	F	G	H	I	J	K	L	M	N	WT.
87K-107-01	1-1/2"	1.25	6.50	3.50	4.85	6.53	0.47	1.85	2.38	1.392	0.696	0.500	0.287	1/4-20	1.50	9
87K-108-01	2"	1.50	7.00	3.69	4.62	6.65	0.72	2.41	3.09	1.949	0.974	0.625	0.412	5/16-18	2.00	18

REV. 18JUL19

87K-100 SERIES

SUPER DUPLEX STAINLESS STEEL ASME CLASS 150 FLANGED STD. PORT BALL VALVE
2-1/2" THRU 3"

5 YEAR WARRANTY MADE IN USA

FOR STANDARDS COMPLIANCE AND STANDARD FEATURES REFER TO PAGE D-3.

STANDARD MATERIAL LIST

	PART	MATERIAL
1	Body	ASTM A995 6A
2	Retainer	ASTM A995 6A
3	Ball	ASTM A276/A479 Alloy 2507 or A995 6A
4	Stem	ASTM A276/A479 Alloy 2507
5	Packing Gland	ASTM A276 Type 316
6	Stem Seals	PTFE
7	Seats	TFM 1700
8	Gland Screws	ASTM A193 B8 Class 1
9	Gland Plate	316 Stainless Steel
10	Stem Nut	18-8 Stainless Steel
11	Lever	316 Stainless Steel
12	Stem Bearing	RPTFE
13	Stop	ASTM A276 Type 316
14	Stop Screw	316 Stainless Steel
15	Lock Plate	302 or 304 Stainless Steel
16	Body Seal	RPTFE
17	Grounding Spring	Stainless Steel
18	Body Joint Stud	ASTM A193 Grade B8M
19	Body Joint Nut	ASTM A194 Grade 8
20	Lockwasher	302 or 304 Stainless Steel

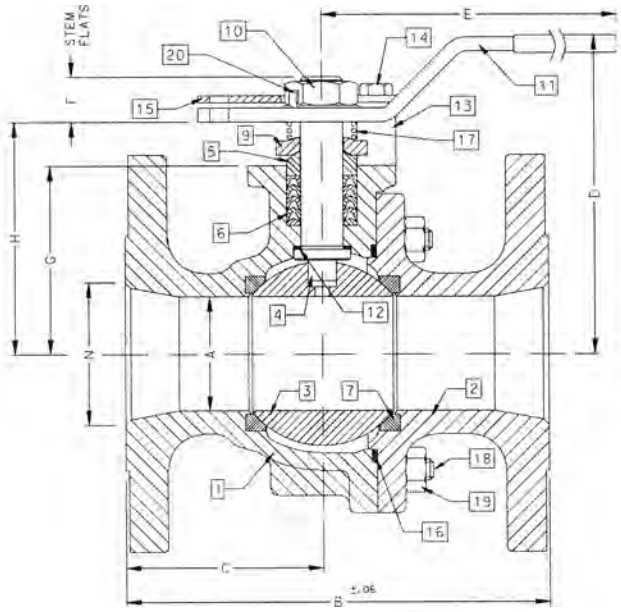

ACTUATOR MOUNTING

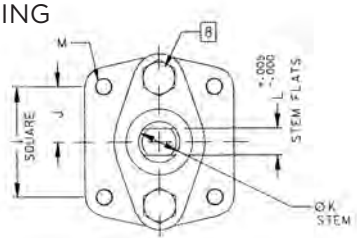

VARIATIONS AVAILABLE

- 87H - Hastelloy
- 87N - Nickel
- 87S - 304L Stainless Steel

OPTIONS AVAILABLE

(MORE INFORMATION IN SECTION J)

- Minimum quantities apply.
- To specify an option, replace the "01" standard suffix with the suffix of the option.
- To specify multiple options, replace the "01" suffix with the desired suffixes in the numerical order shown below. NOTE: Not all suffixes can be combined together.

(SUFFIX)	OPTION
-01	Standard Configuration
-04-	2-1/4" Stem Extension (Carbon Steel, Zinc Plated)
-14-	Side Vented Ball (Uni-Directional)
-21-	UHMWPE Seats
-24-	Graphite Packing, Spiral Wound Graphite Body Seal, RPTFE Bearing (Fire Safe "By Design")
-35-	PTFE Seats and Seals
-38-	PEEK Seats and Graphite Packing
-49-	No Lubrication. Assembled Dry
-57-	Oxygen Cleaned
-65-	MPTFE Seats and Graphite Packing (Fire Safe)
-67-	Cleaned for Industrial Gases
-69-	Drilled and Tapped Purge Port with Plugs
-70-	4" Extended Bonnet
-73-	316 Stainless Steel Spiral Wound Gaskets with PTFE Filler
-76-	Live Loaded 87A/88A Series (Lever)
-77-	Live Loaded (Gear, Actuator)
-80-	TFM 1600 Seats, PTFE Chevron Packing, Spiral Wound PTFE Body Seal PEEK Bearing
-82-	Flat Face Flanges
-90-	Double Packed 4" Extended Bonnet
-9P-	Double Packed 4" Extended Bonnet with Monitoring Port
-CE-	CE Marking. See Page D-3 "Product Approvals" for Availability
-EF-	Graphite Packing (API 641 Compliant)
-EP-	Garlock EVSP Stem Packing with Spiral Wound Graphite Gasket (Fire Safe by Design)
-KF-	PCTFE Stem Bearing
-MG-	Gear Operator with Standard Handwheel
-MH-	Gear Operator with Standard Handwheel & Locking Device
-MJ-	Gear Operator with Oversize Handwheel
-MK-	Gear Operator with Oversize Handwheel & Locking Device
-MP-	Positive Material Identification
-TC-	With Test Certificate
-TD-	Tested to API Spec 6D
-ZP1-	Fugitive Emissions Packing (Viton)
-ZP2-	Fugitive Emissions Packing (Buna-N)
-ZP3-	Fugitive Emissions Packing (Kalrez)

Pressure/Temperature Ratings - Page M-28, Graph No. 40

DIMENSIONS

PART NO.	SIZE	A	B	C	D	E	F	G	H	I	J	K	L	M	N	WT.
87K-109-01	2-1/2"	2.00	7.50	3.50	5.61	8.41	0.80	3.31	4.08	1.949	0.974	0.750	0.477	5/16-18	2.50	27
87K-100-01	3"	2.50	8.00	3.51	6.24	8.41	0.80	3.94	4.71	1.949	0.974	0.750	0.477	5/16-18	3.00	34

REV. 18JUL19

aalberts integrated piping systems

87K-100 SERIES

SUPER DUPLEX STAINLESS STEEL ASME CLASS 150 FLANGED STD. PORT BALL VALVE
4" THRU 8"

5 YEAR WARRANTY MADE IN USA

FOR STANDARDS COMPLIANCE AND STANDARD FEATURES REFER TO PAGE D-3.

STANDARD MATERIAL LIST

	PART	MATERIAL
1	Body	ASTM A995 6A
2	Retainer	ASTM A995 6A
3	Ball	ASTM A995 6A or A276/A479 Alloy 2507
4	Stem	ASTM A276/A479 Alloy 2507
5	Packing Gland	ASTM A276 Type 316
6	Stem Seals	PTFE
7	Seats	TFM 1700
8	Gland Screws	ASTM A193 B8 Class 1
9	Gland Plate	316 Stainless Steel
10	Adapter Screw	18-8 Stainless Steel
11	Handle Adapter	316 Stainless Steel
12	Stem Bearing	RPTFE
13	Stop	ASTM A276 Type 316
14	Stop Screw	316 Stainless Steel
15	Lock Plate	302 or 304 Stainless Steel
16	Body Seal	RPTFE
17	Grounding Spring	Stainless Steel
18	Body Joint Stud	ASTM A193 Grade B8M
19	Body Joint Nut	ASTM A194 Grade 8
20	Lockwasher	302 or 304 Stainless Steel
21	Pipe Handle	Galvanized Steel (not Shown)

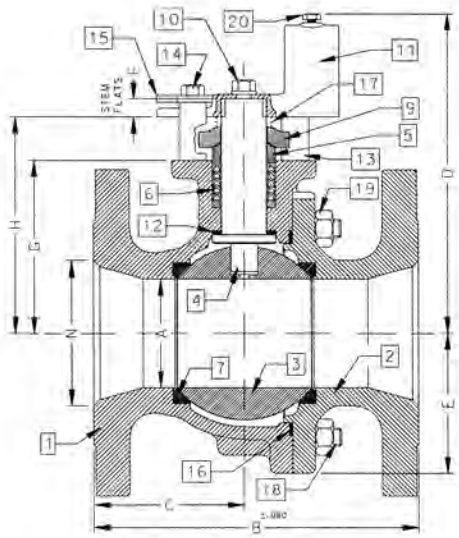

ACTUATOR MOUNTING

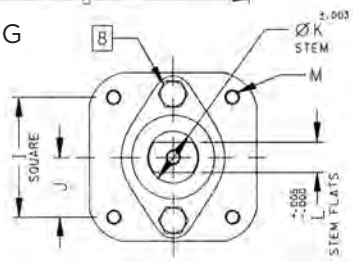

VARIATIONS AVAILABLE

- 87H - Hastelloy
- 87N - Nickel
- 87S - 304L Stainless Steel

OPTIONS AVAILABLE

(MORE INFORMATION IN SECTION J)

- Minimum quantities apply.
- To specify an option, replace the "01" standard suffix with the suffix of the option.
- To specify multiple options, replace the "01" suffix with the desired suffixes in the numerical order shown below. NOTE: Not all suffixes can be combined together.

(SUFFIX)	OPTION
-01	Standard Configuration
-14-	Side Vented Ball (Uni-Directional)
-21-	UHMWPE Seats
-24-	Graphite Packing, Spiral Wound Graphite Body Seal, RPTFE Bearing (Fire Safe "By Design")
-35-	PTFE Seats and Seals
-49-	No Lubrication. Assembled Dry
-57-	Oxygen Cleaned
-65-	MPTFE Seats and Graphite Packing (Fire Safe)
-67-	Cleaned for Industrial Gases
-69-	Drilled and Tapped Purge Ports with Plugs
-70-	Extended Bonnet
-73-	316 Stainless Steel Spiral Wound Gaskets with PTFE Filler
-76-	Live Loaded (Lever)
-77-	Live Loaded (Gear, Actuator)
-80-	TFM 1600 Seats, PTFE Chevron Packing, Spiral Wound PTFE Body Seal PEEK Bearing
-82-	Flat Face Flanges
-90-	Double Packed 4" Extended Bonnet
-9P-	Double Packed 4" Extended Bonnet with Monitoring Port
-CE-	CE Marking. See Page D-3 "Product Approvals" for Availability
-EF-	Graphite Packing (API 641 Compliant)
-EP-	Garlock EVSP Stem Packing with Spiral Wound Graphite Gasket (Fire Safe by Design)
-KF-	PCTFE Stem Bearing
-MG-	Gear Operator with Standard Handwheel
-MH-	Gear Operator with Standard Handwheel & Locking Device
-MJ-	Gear Operator with Oversize Handwheel
-MK-	Gear Operator with Oversize Handwheel & Locking Device
-MP-	Positive Material Identification
-TC-	With Test Certificate
-TD-	Tested to API Spec 6D
-ZP1-	Fugitive Emissions Packing (Viton)
-ZP2-	Fugitive Emissions Packing (Buna-N)
-ZP3-	Fugitive Emissions Packing (Kalrez)

Pressure/Temperature Ratings - Page M-28, Graph No. 40

DIMENSIONS

PART NO.	SIZE	A	B	C	D	E	F	G	H	I	J	K	L	M	N	WT.
87K-10A-01	4"	3.00	9.00	4.18	8.80	3.88	0.50	4.75	5.95	2.840	1.420	1.250	0.725	3/8-16	4.00	73
87K-10C-01	6"	4.00	10.50	4.69	9.99	5.13	0.50	5.94	7.13	2.840	1.420	1.250	0.725	3/8-16	6.00	117
87K-10E-01	8"	6.00	18.00	9.00	13.73	7.00	1.00	7.75	9.48	4.596	2.298	2.000	1.375	3/4-10	8.00	310

REV. 18JUL19

87K-100 SERIES

SUPER DUPLEX STAINLESS STEEL ASME CLASS 150 FLANGED STD. PORT BALL VALVE
10"

5 YEAR WARRANTY MADE IN USA

FOR STANDARDS COMPLIANCE AND STANDARD FEATURES REFER TO PAGE D-3.

STANDARD MATERIAL LIST

	PART	MATERIAL
1	Body	ASTM A995 6A
2	Retainer	ASTM A995 6A
3	Ball	ASTM A276/A479 Alloy 2507 or A995 6A
4	Stem	ASTM A276 A995 6A
5	Packing Gland	ASTM A276 Type 316
6	Stem Seals	PTFE
7	Seats	TFM 1700
8	Gland Screws	ASTM A193 B8 Class 1
9	Gland Plate	316 Stainless Steel
10	Stem Bearing	RPTFE
11	Body Seal	RPTFE
12	Body Joint Stud	ASTM A193 Grade B8M
13	Body Joint Nut	ASTM A194 Grade 8

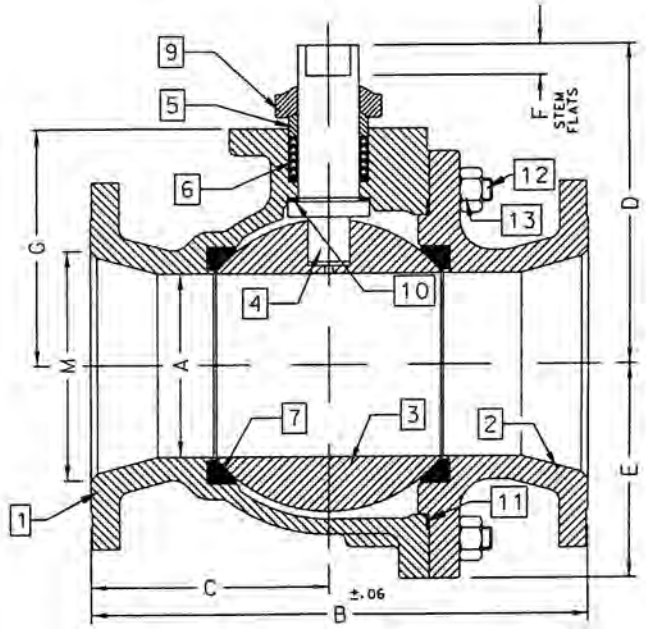

ACTUATOR MOUNTING

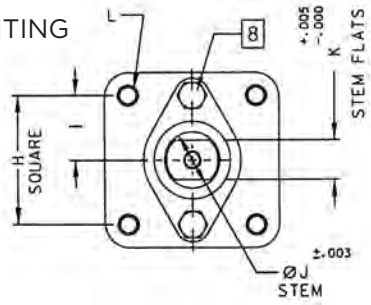

VARIATIONS AVAILABLE

- 87H - Hastelloy
- 87N - Nickel
- 87S - 304L Stainless Steel

OPTIONS AVAILABLE

(MORE INFORMATION IN SECTION J)

- Minimum quantities apply.
- To specify an option, replace the "01" standard suffix with the suffix of the option.
- To specify multiple options, replace the "01" suffix with the desired suffixes in the numerical order shown below. NOTE: Not all suffixes can be combined together.

(SUFFIX)	OPTION
-01	Standard Configuration
-14-	Side Vented Ball (Uni-Directional)
-21-	UHMWPE Seats
-24-	Graphite Packing, Spiral Wound Graphite Body Seal, RPTFE Bearing (Fire Safe "By Design")
-35-	PTFE Seats and Seals
-49-	No Lubrication. Assembled Dry
-57-	Oxygen Cleaned
-65-	MPTFE Seats and Graphite Packing (Fire Safe)
-69-	Drilled and Tapped Purge Port with Plugs
-70-	4" Extended Bonnet
-77-	Live Loaded 87A/88A Series (Gear, Actuator)
-80-	TFM 1600 Seats, PTFE Chevron Packing, Spiral Wound PTFE Body Seal, PEEK Bearing
-82-	Flat Face Flanges
-90-	Double Packed 4" Extended Bonnet
-9P-	Double Packed 4" Extended Bonnet with Monitoring Port
-CE-	CE Marking. See Page D-3 "Product Approvals" for Availability
-EF-	Graphite Packing (API 641 Compliant)
-EP-	Garlock EVSP Stem Packing with Spiral Wound Graphite Gasket (Fire Safe by Design)
-KF-	PCTFE Stem Bearing
-MG-	Gear Operator with Standard Handwheel
-MH-	Gear Operator with Standard Handwheel & Locking Device
-MJ-	Gear Operator with Oversize Handwheel
-MK-	Gear Operator with Oversize Handwheel & Locking Device
-MP-	Positive Material Identification
-TC-	With Test Certificate
-TD-	Tested to API Spec 6D
-ZP1-	Fugitive Emissions Packing (Viton)
-ZP2-	Fugitive Emissions Packing (Buna-N)
-ZP3-	Fugitive Emissions Packing (Kalrez)

Pressure/Temperature Ratings - Page M-28, Graph No. 40

DIMENSIONS

PART NO.	SIZE	A	B	C	D	E	F	G	H	I	J	K	L	M	WT.
87K-10G-01	10"	8.00	21.00	10.37	12.83	9.18	1.00	10.22	4.596	2.298	2.000	1.375	3/4-10	10.00	526

REV. 18JUL19

aalberts integrated piping systems

87K-200 SERIES

SUPER DUPLEX STAINLESS STEEL ASME CLASS 150 FLANGED FULL PORT BALL VALVE
1/2" THRU 1"

5 YEAR WARRANTY MADE IN USA

FOR STANDARDS COMPLIANCE AND STANDARD FEATURES REFER TO PAGE D-3.

STANDARD MATERIAL LIST

	PART	MATERIAL
1	Body	ASTM A995 6A
2	Retainer	ASTM A276 /A479 Alloy 2507
3	Ball	ASTM A276 /A479 Alloy 2507
4	Stem	ASTM A276 /A479 Alloy 2507
5	Packing Gland	ASTM A276 Type 316
6	Stem Seals	PTFE
7	Seats	TFM 1700
8	Gland Screws	ASTM A193 B8 Class 1
9	Gland Plate	302 or 304 Stainless Steel
10	Stem Nut	316 Stainless Steel
11	Lever	302 or 304 with Vinyl Grip
12	Stem Bearing	RPTFE
13	Stop	ASTM A276 Type 316
14	Stop Screw	18-8 Stainless Steel
15	Lock Plate	302 or 304 Stainless Steel
16	Body Seal	RPTFE
17	Lockwasher	302 or 304 Stainless Steel
18	Grounding Spring	Stainless Steel, ASTM A313

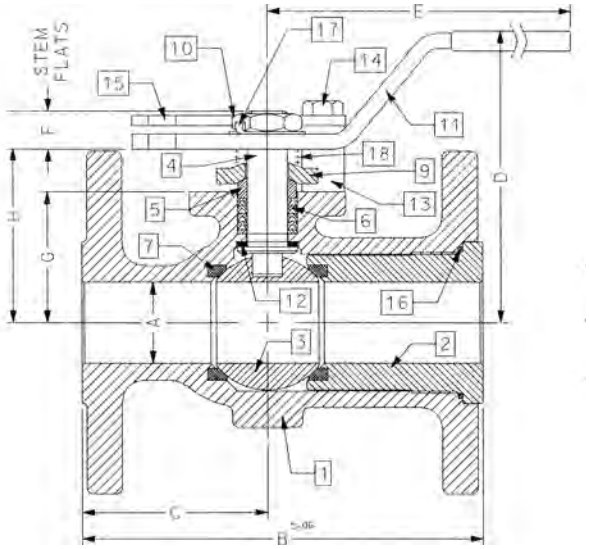

ACTUATOR MOUNTING

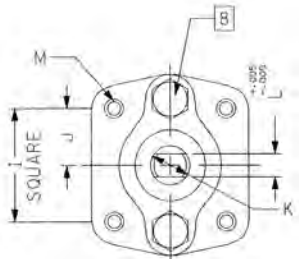

VARIATIONS AVAILABLE

- 87H - Hastelloy
- 87M - Monel
- 87N - Nickel
- 87S - 304L Stainless Steel

OPTIONS AVAILABLE

(MORE INFORMATION IN SECTION J)

- Minimum quantities apply.
- To specify an option, replace the "01" standard suffix with the suffix of the option.
- To specify multiple options, replace the "01" suffix with the desired suffixes in the numerical order shown below. NOTE: Not all suffixes can be combined together.

(SUFFIX)	OPTION
-01	Standard Configuration
-04-	2-1/4" Stem Extension (Carbon Steel, Zinc Plated)
-14-	Side Vented Ball (Uni-Directional)
-15-	Wheel Handle, Steel
-21-	UHMWPE Seats
-24-	Graphite Packing, Spiral Wound Graphite Body Seal, RPTFE Bearing (Fire Safe "By Design")
-35-	PTFE Seats and Seals
-38-	PEEK Seats and Graphite Packing
-49-	No Lubrication. Assembled Dry
-57-	Oxygen Cleaned
-65-	MPTFE Seats and Graphite Packing (Fire Safe)
-69-	Drilled and Tapped Purge Port with Plugs
-70-	4" Extended Bonnet
-73-	316 Stainless Steel Spiral Wound Gaskets with PTFE Filler
-76-	Live Loaded (Lever)
-77-	Live Loaded (Gear, Actuator)
-80-	TFM 1600 Seats, PTFE Chevron Packing, Spiral Wound PTFE Body Seal, PEEK Bearing
-82-	Flat Face Flanges
-90-	Double Packed 4" Extended Bonnet
-9P-	Double Packed 4" Extended Bonnet with Monitoring Port
-CE-	CE Marking. See Page D-3 "Product Approvals" for Availability
-EF-	Graphite Packing (API 641 Compliant) (Not Available on 1/2" Size)
-EP-	Garlock EVSP Stem Packing with Spiral Wound Graphite Gasket (Fire Safe by Design)
-KF-	PCTFE Stem Bearing
-MP-	Positive Material Identification
-TC-	With Test Certificate
-TD-	Tested to API Spec 6D
-ZP1-	Fugitive Emissions Packing (Viton)
-ZP2-	Fugitive Emissions Packing (Buna-N)
-ZP3-	Fugitive Emissions Packing (Kalrez)

Pressure/Temperature Ratings - Page M-28, Graph No. 40

DIMENSIONS

PART NO.	SIZE	A	B	C	D	E	F	G	H	I	J	K	L	M	WT.
87K-203-01A	1/2"	0.50	4.25	2.06	2.74	5.12	0.24	1.09	1.44	1.00	0.500	0.375	0.245	10-24	5
87K-204-01A	3/4"	0.75	4.62	2.18	3.43	5.54	0.22	1.65	2.13	1.392	0.696	0.500	0.287	1/4-20	6
87K-205-01	1"	1.00	5.00	2.32	4.62	6.53	0.47	1.62	2.15	1.392	0.696	0.500	0.287	1/4-20	7

REV. 10SEP19

87K-200 SERIES

SUPER DUPLEX STAINLESS STEEL ASME CLASS 150 FLANGED FULL PORT BALL VALVE
1-1/2" THRU 2-1/2"

5 YEAR WARRANTY MADE IN USA

FOR STANDARDS COMPLIANCE AND STANDARD FEATURES REFER TO PAGE D-3.

STANDARD MATERIAL LIST

	PART	MATERIAL
1	Body	ASTM A995 6A
2	Retainer	ASTM A995 6A
3	Ball	ASTM A276/A479 Alloy 2507 or A995 6A
4	Stem	ASTM A276/ A479 Alloy 2507
5	Packing Gland	ASTM A276 Type 316
6	Stem Seals	PTFE
7	Seats	TFM 1700
8	Gland Screws	ASTM A193 B8 Class 1
9	Gland Plate	316 Stainless Steel
10	Adapter Screw	18-8 Stainless Steel
11	Lever	316 Stainless Steel
12	Stem Bearing	RPTFE
13	Stop	ASTM A276 Type 316
14	Stop Screw	316 Stainless Steel
15	Lock Plate	302 or 304 Stainless Steel
16	Body Seal	RPTFE
17	Grounding Spring	Stainless Steel
18	Body Joint Stud	ASTM A193 Grade B8M
19	Body Joint Nut	ASTM A194 Grade 8
20	Lockwasher	302 or 304 Stainless Steel

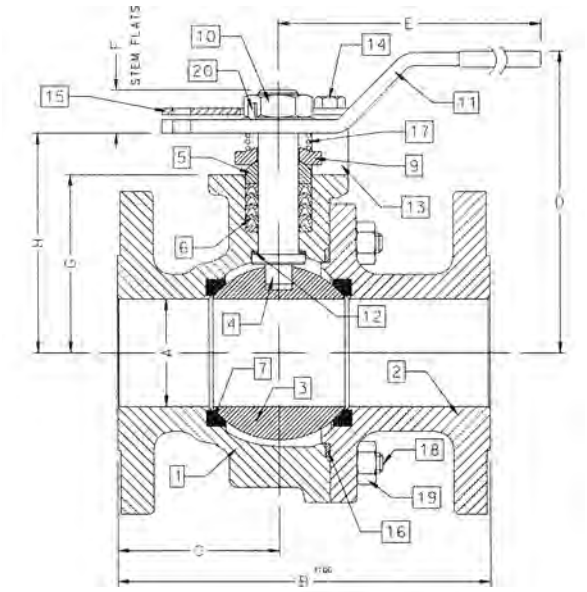

ACTUATOR MOUNTING

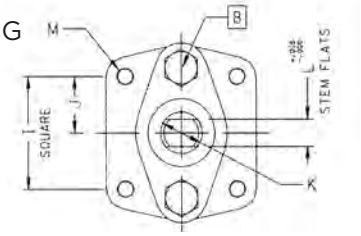

VARIATIONS AVAILABLE

- 87H - Hastelloy
- 87M - Monel
- 87N - Nickel
- 87S - 304L Stainless Steel

OPTIONS AVAILABLE

(MORE INFORMATION IN SECTION J)

- Minimum quantities apply.
- To specify an option, replace the "01" standard suffix with the suffix of the option.
- To specify multiple options, replace the "01" suffix with the desired suffixes in the numerical order shown below. NOTE: Not all suffixes can be combined together.

(SUFFIX)	OPTION
-01	Standard Configuration
-04-	2-1/4" Stem Extension (Carbon Steel, Zinc Plated)
-14-	Side Vented Ball (Uni-Directional)
-21-	UHMWPE Seats
-24-	Graphite Packing, Spiral Wound Graphite Body Seal, RPTFE Bearing (Fire Safe "By Design")
-35-	PTFE Seats and Seals
-38-	PEEK Seats and Graphite Packing
-49-	No Lubrication. Assembled Dry
-57-	Oxygen Cleaned
-65-	MPTFE Seats and Graphite Packing (Fire Safe)
-69-	Drilled and Tapped Purge Ports with Plugs
-70-	4" Extended Bonnet
-73-	316 Stainless Steel Spiral Wound Gaskets with PTFE Filler
-76-	Live Loaded (Lever)
-77-	Live Loaded (Gear, Actuator)
-80-	TFM 1600 Seats, PTFE Chevron Packing, Spiral Wound PTFE Body Seal, PEEK Bearing
-82-	Flat Face Flanges
-90-	Double Packed 4" Extended Bonnet
-9P-	Double Packed 4" Extended Bonnet with Monitoring Port
-CE-	CE Marking. See Page D-3 "Product Approvals" for Availability
-EF-	Graphite Packing (API 641 Compliant)
-EP-	Garlock EVSP Stem Packing with Spiral Wound Graphite Gasket (Fire Safe by Design)
-KF-	PCTFE Stem Bearing
-MG-	Gear Operator with Standard Handwheel
-MH-	Gear Operator with Standard Handwheel & Locking Device
-MJ-	Gear Operator with Oversize Handwheel
-MK-	Gear Operator with Oversize Handwheel & Locking Device
-MP-	Positive Material Identification
-TC-	With Test Certificate
-TD-	Tested to API Spec 6D
-ZP1-	Fugitive Emissions Packing (Viton)
-ZP2-	Fugitive Emissions Packing (Buna-N)
-ZP3-	Fugitive Emissions Packing (Kalrez)

Pressure/Temperature Ratings - Page M-28, Graph No. 40

DIMENSIONS

PART NO.	SIZE	A	B	C	D	E	F	G	H	I	J	K	L	M	WT.
87K-207-01	1-1/2"	1.50	6.50	3.00	4.62	6.65	0.72	2.41	3.09	1.949	0.974	0.625	0.412	5/16-18	14
87K-208-01	2"	2.00	7.00	3.04	5.61	8.41	0.80	3.31	4.08	1.949	0.974	0.750	0.477	5/16-18	25
87K-209-01	2-1/2"	2.50	7.50	3.34	6.24	8.41	0.80	3.94	4.71	1.949	0.974	0.750	0.477	5/16-18	30

REV. 18JUL19

aalberts integrated piping systems

87K-200 SERIES

SUPER DUPLEX STAINLESS STEEL ASME CLASS 150 FLANGED FULL PORT BALL VALVE
3" THRU 6"

5 YEAR WARRANTY MADE IN USA

FOR STANDARDS COMPLIANCE AND STANDARD FEATURES REFER TO PAGE D-3.

STANDARD MATERIAL LIST

	PART	MATERIAL
1	Body	ASTM A995 6A
2	Retainer	ASTM A995 6A
3	Ball	ASTM A276/A479 Alloy 2507 or A995 6A
4	Stem	ASTM A276/A479 Alloy 2507
5	Packing Gland	ASTM A276 Type 316
6	Stem Seals	PTFE
7	Seats	TFM 1700
8	Gland Screws	ASTM A193 B8 Class 1
9	Gland Plate	316 Stainless Steel
10	Adapter Screw	18-8 Stainless Steel
11	Handle Adapter	316 with Vinyl Grip
12	Stem Bearing	RPTFE
13	Stop	ASTM A276 Type 316
14	Stop Screw	316 Stainless Steel
15	Lock Plate	302 or 304 Stainless Steel
16	Body Seal	RPTFE
17	Grounding Spring	Stainless Steel
18	Body Joint Stud	ASTM A193 Grade B8M
19	Body Joint Nut	ASTM A194 Grade 8
20	Pipe Handle	Galvanized Steel (not shown)

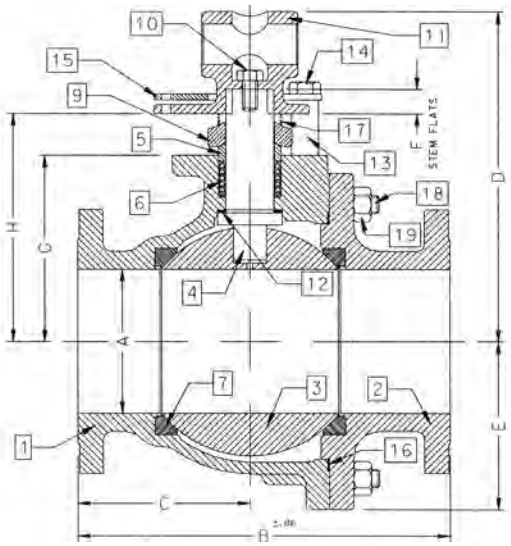

ACTUATOR MOUNTING

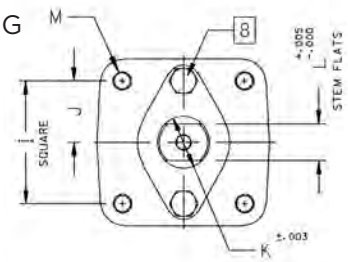

VARIATIONS AVAILABLE

- 87H - Hastelloy
- 87N - Nickel
- 87S - 304L Stainless Steel

OPTIONS AVAILABLE

(MORE INFORMATION IN SECTION J)

- Minimum quantities apply.
- To specify an option, replace the "01" standard suffix with the suffix of the option.
- To specify multiple options, replace the "01" suffix with the desired suffixes in the numerical order shown below. NOTE: Not all suffixes can be combined together.

(SUFFIX)	OPTION
-01	Standard Configuration
-14-	Side Vented Ball (Uni-Directional)
-21-	UHMWPE Seats
-24-	Graphite Packing, Spiral Wound Graphite Body Seal, RPTFE Bearing (Fire Safe "By Design")
-35-	PTFE Seats and Seals
-38-	PEEK Seats and Graphite Packing
-49-	No Lubrication. Assembled Dry
-57-	Oxygen Cleaned
-65-	MPTFE Seats and Graphite Packing (Fire Safe)
-69-	Drilled and Tapped Purge Ports with Plugs
-70-	4" Extended Bonnet
-73-	316 Stainless Steel Spiral Wound Gaskets with PTFE Filler
-76-	Live Loaded (Lever)
-77-	Live Loaded (Gear, Actuator)
-80-	TFM 1600 Seats, PTFE Chevron Packing, Spiral Wound PTFE Body Seal, PEEK Bearing
-82-	Flat Face Flanges
-90-	Double Packed 4" Extended Bonnet
-9P-	Double Packed 4" Extended Bonnet with Monitoring Port
-CE-	CE Marking. See Page D-3 "Product Approvals" for Availability
-EF-	Graphite Packing (API 641 Compliant)
-EP-	Garlock EVSP Stem Packing with Spiral Wound Graphite Gasket (Fire Safe by Design)
-KF-	PCTFE Stem Bearing
-MG-	Gear Operator with Standard Handwheel
-MH-	Gear Operator with Standard Handwheel & Locking Device
-MJ-	Gear Operator with Oversize Handwheel
-MK-	Gear Operator with Oversize Handwheel & Locking Device
-MP-	Positive Material Identification
-TC-	With Test Certificate
-TD-	Tested to API Spec 6D
-ZP1-	Fugitive Emissions Packing (Viton)
-ZP2-	Fugitive Emissions Packing (Buna-N)
-ZP3-	Fugitive Emissions Packing (Kalrez)

Pressure/Temperature Ratings - Page M-28, Graph No. 40

DIMENSIONS

PART NO.	SIZE	A	B	C	D	E	F	G	H	I	J	K	L	M	WT.
87K-200-01	3"	3.00	8.00	3.68	8.80	3.88	0.50	4.75	5.95	2.840	1.420	1.250	0.725	3/8-16	60
87K-20A-01	4"	4.00	9.00	3.94	9.99	5.13	0.50	5.94	7.13	2.840	1.420	1.250	0.725	3/8-16	91
87K-20C-01	6"	6.00	15.50	7.19	13.73	7.00	1.00	7.75	9.48	4.596	2.298	2.000	1.375	3/4-10	248

REV. 18JUL19

87K-200 SERIES

SUPER DUPLEX STAINLESS STEEL ASME CLASS 150 FLANGED FULL PORT BALL VALVE
8" THRU 12"

5 YEAR WARRANTY MADE IN USA

FOR STANDARDS COMPLIANCE AND STANDARD FEATURES REFER TO PAGE D-3.

STANDARD MATERIAL LIST

	PART	MATERIAL
1	Body	ASTM A995 6A
2	Retainer	ASTM A995 6A
3	Ball	ASTM A276/A479 Alloy or A995 6A
4	Stem	ASTM A276/A479 Alloy 2507
5	Packing Gland	ASTM A276 Type 316
6	Stem Seals	PTFE
7	Seats	TFM 1700
8	Gland Screws	ASTM A193 B8 Class 1
9	Gland Plate	316 Stainless Steel
10	Stem Bearing	RPTFE
11	Body Seal	RPTFE
12	Body Joint Stud	ASTM A193 Grade B8M
13	Body Joint Nut	ASTM A194 Grade 8

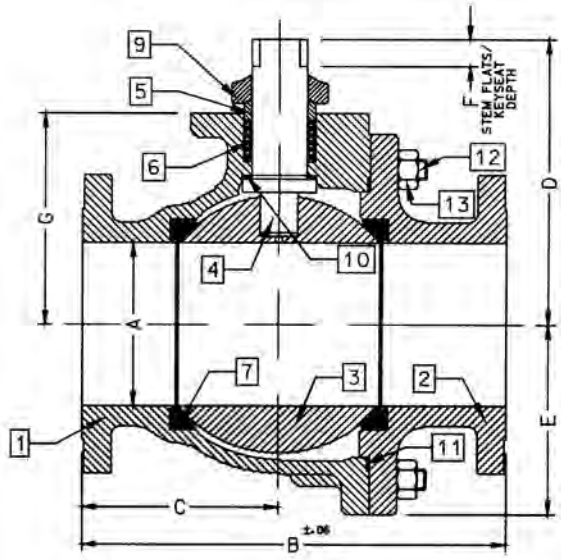

ACTUATOR MOUNTING

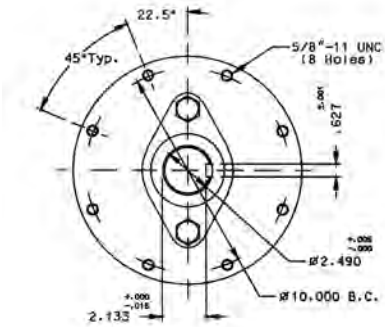

10" & 12"

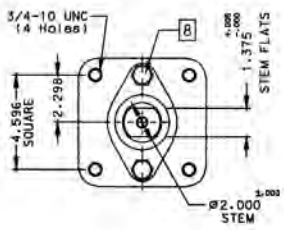

8"

VARIATIONS AVAILABLE

- 87H - Hastelloy
- 87N - Nickel
- 87S - 304L Stainless Steel

OPTIONS AVAILABLE

(MORE INFORMATION IN SECTION J)

- Minimum quantities apply.
- To specify an option, replace the "01" standard suffix with the suffix of the option.
- To specify multiple options, replace the "01" suffix with the desired suffixes in the numerical order shown below. NOTE: Not all suffixes can be combined together.

(SUFFIX)	OPTION
-01	Standard Configuration
-14-	Side Vented Ball (Uni-Directional)
-21-	UHMWPE Seats
-24-	Graphite Packing, Spiral Wound Graphite Body Seal, RPTFE Bearing (Fire Safe "By Design")
-35-	PTFE Seats and Seals
-49-	No Lubrication. Assembled Dry
-57-	Oxygen Cleaned
-65-	MPTFE Seats and Graphite Packing (Fire Safe)
-69-	Drilled and Tapped Purge Ports with Plugs
-70-	4" Extended Bonnet (8" Only)
-77-	Live Loaded (Gear, Actuator)
-80-	TFM 1600 Seats, PTFE Chevron Packing, Spiral Wound PTFE Body Seal, PEEK Bearing
-82-	Flat Face Flanges
-90-	Double Packed 4" Extended Bonnet
-9P-	Double Packed 4" Extended Bonnet with Monitoring Port
-CE-	CE Marking. See Page D-3 "Product Approvals" for Availability
-EF-	Graphite Packing (API 641 Compliant)
-EP-	Garlock EVSP Stem Packing with Spiral Wound Graphite Gasket (Fire Safe by Design)
-KF-	PCTFE Stem Bearing
-MG-	Gear Operator with Standard Handwheel
-MH-	Gear Operator with Standard Handwheel & Locking Device
-MJ-	Gear Operator with Oversize Handwheel
-MK-	Gear Operator with Oversize Handwheel & Locking Device
-MP-	Positive Material Identification
-TC-	With Test Certificate
-TD-	Tested to API Spec 6D
-ZP1-	Fugitive Emissions Packing (Viton)
-ZP2-	Fugitive Emissions Packing (Buna-N)
-ZP3-	Fugitive Emissions Packing (Kalrez)

Pressure/Temperature Ratings - Page M-28, Graph No. 40

DIMENSIONS

PART NO.	SIZE	A	B	C	D	E	F	G
87K-20E-01	8"	8.00	18.00	8.88	12.83	9.18	1.00	10.22
87K-20G-01	10"	10.00	21.00	10.26	18.57	11.33	2.31	12.80
87K-20H-01	12"	12.00	24.00	12.09	20.31	13.40	2.31	14.92

REV. 18JUL19

aalberts integrated piping systems

87K-700 SERIES

SUPER DUPLEX STAINLESS STEEL ASME CLASS 300 FLANGED STD. PORT BALL VALVE
1-1/2" THRU 2"

5 YEAR WARRANTY MADE IN USA

FOR STANDARDS COMPLIANCE AND STANDARD FEATURES REFER TO PAGE D-3.

STANDARD MATERIAL LIST

	PART	MATERIAL
1	Body	ASTM A995 6A
2	Retainer	ASTM A276/A479 Alloy 2507
3	Ball	ASTM A276/A479 Alloy 2507
4	Stem	ASTM A276/A479 Alloy 2507
5	Packing Gland	ASTM A276 Type 316
6	Stem Seals	PTFE
7	Seats	TFM 1700
8	Gland Screws	ASTM A193 B8 Class 1
9	Gland Plate	302 & 304 Stainless Steel
10	Stem Nut	316 Stainless Steel
11	Lever	302 & 304 Stainless Steel with Vinyl Grip
12	Stem Bearing	RPTFE
13	Stop	ASTM A276 Type 316
14	Stop Screw	18-8 Stainless Steel
15	Lock Plate	302 or 304 Stainless Steel
16	Body Seal	RPTFE
17	Lockwasher	302 or 304 Stainless Steel
18	Grounding Spring	Stainless Steel

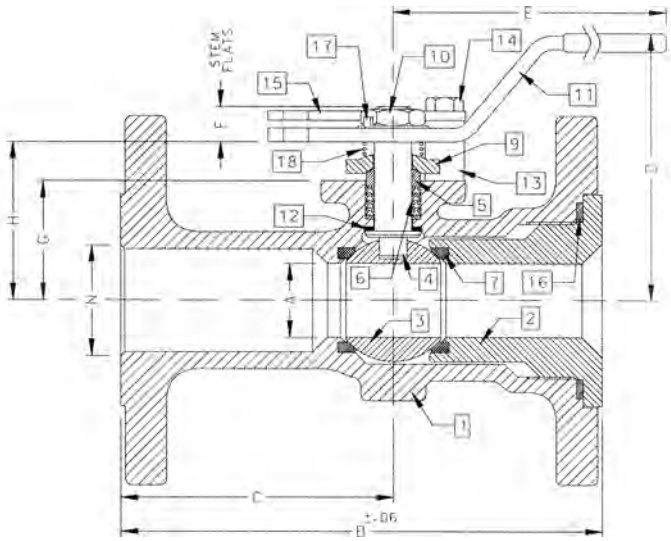

ACTUATOR MOUNTING

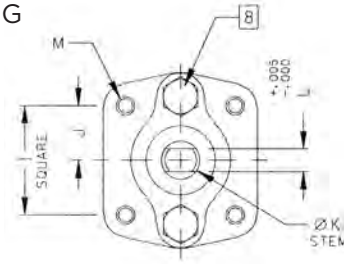

VARIATIONS AVAILABLE

- 87H - Hastelloy
- 87M - Monel
- 87N - Nickel
- 87S - 304L Stainless Steel

OPTIONS AVAILABLE

(MORE INFORMATION IN SECTION J)

- Minimum quantities apply.
- To specify an option, replace the "01" standard suffix with the suffix of the option.
- To specify multiple options, replace the "01" suffix with the desired suffixes in the numerical order shown below. NOTE: Not all suffixes can be combined together.

(SUFFIX)	OPTION
-01	Standard Configuration
-04-	2-1/4" Stem Extension (Carbon Steel, Zinc Plated)
-14-	Side Vented Ball (See Page J-2)
-15-	Wheel Handle, Steel
-21-	UHMWPE Seats
-24-	Graphite Packing, Spiral Wound Graphite Body Seal, RPTFE Bearing (Fire Safe "By Design")
-35-	PTFE Seats and Seals
-38-	PEEK Seats and Graphite Packing
-49-	No Lubrication. Assembled Dry
-57-	Oxygen Cleaned
-65-	MPTFE Seats and Graphite Packing (Fire Safe)
-69-	Drilled and Tapped Purge Ports with Plugs
-70-	4" Extended Bonnet
-73-	316 Stainless Steel Spiral Wound Gaskets with PTFE Filler
-76-	Live Loaded (Lever)
-77-	Live Loaded (Gear, Actuator)
-80-	TFM 1600 Seats, PTFE Chevron Packing, Spiral Wound PTFE Body Seal, PEEK Bearing
-82-	Flat Face Flanges
-90-	Double Packed 4" Extended Bonnet
-9P-	Double Packed 4" Extended Bonnet with Monitoring Port
-CE-	CE Marking. See Page D-3 "Product Approvals" for Availability
-EF-	Graphite Packing (API 641 Compliant)
-EP-	Garlock EVSP Stem Packing with Spiral Wound Graphite Gasket (Fire Safe by Design)
-KF-	PCTFE Stem Bearing
-MP-	Positive Material Identification
-TC-	With Test Certificate
-TD-	Tested to API Spec 6D
-ZP1-	Fugitive Emissions Packing (Viton)
-ZP2-	Fugitive Emissions Packing (Buna-N)
-ZP3-	Fugitive Emissions Packing (Kalrez)

Pressure/Temperature Ratings - Page M-28, Graph No. 41

DIMENSIONS

PART NO.	SIZE	A	B	C	D	E	F	G	H	I	J	K	L	M	N	WT.
87K-707-01A	1-1/2"	1.25	7.50	4.50	4.85	6.53	0.47	1.85	2.38	1.392	0.696	0.500	0.287	1/4-20	1.50	15.7
87K-708-01	2"	1.50	8.50	5.19	4.62	6.65	0.72	2.41	3.09	1.949	0.974	0.625	0.412	5/16-18	2.00	24.0

REV. 18JUL19

87K-700 SERIES

SUPER DUPLEX STAINLESS STEEL ASME CLASS 300 FLANGED STD. PORT BALL VALVE
2-1/2" THRU 3"

5 YEAR WARRANTY MADE IN USA

FOR STANDARDS COMPLIANCE AND STANDARD FEATURES REFER TO PAGE D-3.

STANDARD MATERIAL LIST

	PART	MATERIAL
1	Body	ASTM A995 6A
2	Retainer	ASTM A995 6A
3	Ball	ASTM A276/A479 Alloy 2507 or A995 6A
4	Stem	ASTM A276/A479 Alloy 2507
5	Packing Gland	ASTM A276 Type 316
6	Stem Seals	PTFE
7	Seats	TFM 1700
8	Gland Screws	ASTM A193 B8 Class 1
9	Gland Plate	316 Stainless Steel
10	Stem Nut	18-8 Stainless Steel
11	Lever	316 with Vinyl Grip
12	Stem Bearing	RPTFE
13	Stop	ASTM A276 Type 316
14	Stop Screw	316 Stainless Steel
15	Lock Plate	302 or 304 Stainless Steel
16	Body Seal	RPTFE
17	Grounding Spring	Stainless Steel
18	Body Joint Stud	ASTM A193 Grade B8M
19	Body Joint Nut	ASTM A194 Grade 8
20	Lockwasher	302 or 304 Stainless Steel

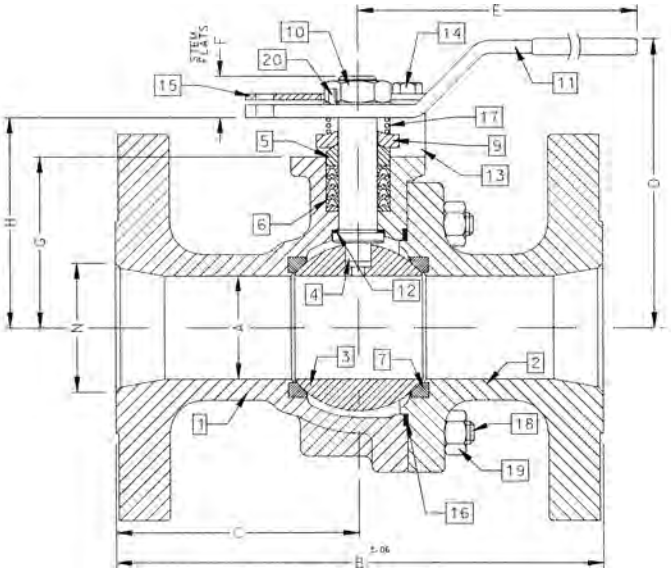

ACTUATOR MOUNTING

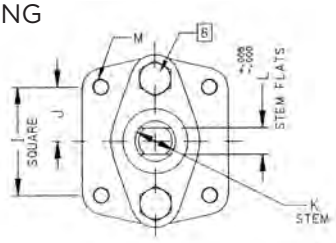

VARIATIONS AVAILABLE

- 87H - Hastelloy
- 87N - Nickel
- 87S - 304L Stainless Steel

OPTIONS AVAILABLE

(MORE INFORMATION IN SECTION J)

- Minimum quantities apply.
- To specify an option, replace the "01" standard suffix with the suffix of the option.
- To specify multiple options, replace the "01" suffix with the desired suffixes in the numerical order shown below. NOTE: Not all suffixes can be combined together.

(SUFFIX)	OPTION
-01	Standard Configuration
-04-	2-1/4" Stem Extension (Carbon Steel, Zinc Plated)
-14-	Side Vented Ball (Uni-Directional)
-21-	UHMWPE Seats
-24-	Graphite Packing, Spiral Wound Graphite Body Seal, RPTFE Bearing (Fire Safe "By Design")
-35-	PTFE Seats and Seals
-38-	PEEK Seats and Graphite Packing
-49-	No Lubrication. Assembled Dry
-57-	Oxygen Cleaned
-65-	MPTFE Seats and Graphite Packing (Fire Safe)
-69-	Drilled and Tapped Purge Ports with Plugs
-70-	4" Extended Bonnet
-73-	316 Stainless Steel Spiral Wound Gaskets with PTFE Filler
-76-	Live Loaded (Lever)
-77-	Live Loaded (Gear, Actuator)
-80-	TFM 1600 Seats, PTFE Chevron Packing, Spiral Wound PTFE Body Seal, PEEK Bearing
-82-	Flat Face Flanges
-90-	Double Packed 4" Extended Bonnet
-9P-	Double Packed 4" Extended Bonnet with Monitoring Port
-CE-	CE Marking. See Page D-3 "Product Approvals" for Availability
-EF-	Graphite Packing (API 641 Compliant)
-EP-	Garlock EVSP Stem Packing with Spiral Wound Graphite Gasket (Fire Safe by Design)
-KF-	PCTFE Stem Bearing
-MG-	Gear Operator with Standard Handwheel
-MH-	Gear Operator with Standard Handwheel & Locking Device
-MJ-	Gear Operator with Oversize Handwheel
-MK-	Gear Operator with Oversize Handwheel & Locking Device
-MP-	Positive Material Identification
-TC-	With Test Certificate
-TD-	Tested to API Spec 6D
-ZP1-	Fugitive Emissions Packing (Viton)
-ZP2-	Fugitive Emissions Packing (Buna-N)
-ZP3-	Fugitive Emissions Packing (Kalrez)

Pressure/Temperature Ratings - Page M-28, Graph No. 41

DIMENSIONS

PART NO.	SIZE	A	B	C	D	E	F	G	H	I	J	K	L	M	N	WT.
87K-709-01	2-1/2"	2.00	9.50	4.75	5.61	8.41	0.80	3.31	4.08	1.949	0.974	0.750	0.477	5/16-18	2.50	39
87K-700-01	3"	2.50	11.12	5.56	6.24	8.41	0.80	3.94	4.71	1.949	0.974	0.750	0.477	5/16-18	3.00	55

REV. 18JUL19

aalberts integrated piping systems

87K-700 SERIES

SUPER DUPLEX STAINLESS STEEL ASME CLASS 300 FLANGED STD. PORT BALL VALVE
4" THRU 8"

5 YEAR WARRANTY MADE IN USA

FOR STANDARDS COMPLIANCE AND STANDARD FEATURES REFER TO PAGE D-3.

STANDARD MATERIAL LIST

	PART	MATERIAL
1	Body	ASTM A995 6A
2	Retainer	ASTM A276/A479 Alloy 2507
3	Ball	ASTM A276/A479 Alloy 2507 or A995 6A
4	Stem	ASTM A276/A479 Alloy 2507
5	Packing Gland	ASTM A276 Type 316
6	Stem Seals	PTFE
7	Seats	TFM 1700
8	Gland Screws	ASTM A193 B8 Class 1
9	Gland Plate	316 Stainless Steel
10	Adapter Screw	18-8 Stainless Steel
11	Handle Adapter	316 Stainless Steel
12	Stem Bearing	RPTFE
13	Stop	ASTM A276 Type 316
14	Stop Screw	316 Stainless Steel
15	Lock Plate	302 or 304 Stainless Steel
16	Body Seal	RPTFE
17	Grounding Spring	Stainless Steel
18	Body Joint Stud	ASTM A193 Grade B8M
19	Body Joint Nut	ASTM A194 Grade 8
20	Adapter Screw	18-8 Stainless Steel
21	Pipe Handle	Galvanized Steel (not shown)

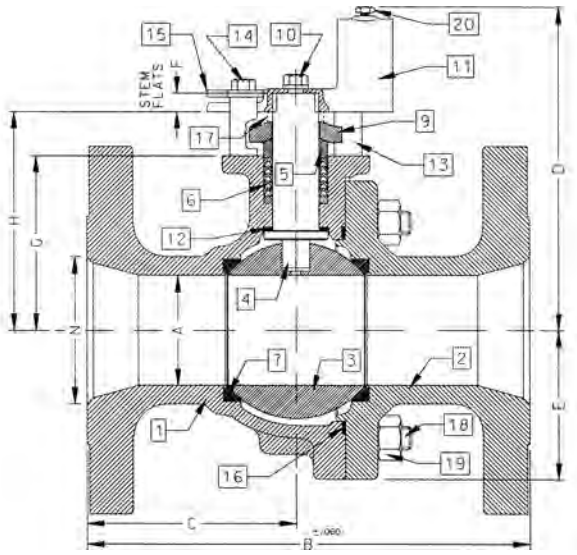

ACTUATOR MOUNTING

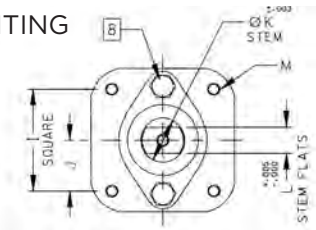

VARIATIONS AVAILABLE

- 87H - Hastelloy
- 87N - Nickel
- 87S - 304L Stainless Steel

OPTIONS AVAILABLE

(MORE INFORMATION IN SECTION J)

- Minimum quantities apply.
- To specify an option, replace the "01" standard suffix with the suffix of the option.
- To specify multiple options, replace the "01" suffix with the desired suffixes in the numerical order shown below. NOTE: Not all suffixes can be combined together.

(SUFFIX)	OPTION
-01	Standard Configuration
-14-	Side Vented Ball (Uni-Directional)
-21-	UHMWPE Seats
-24-	Graphite Packing, Spiral Wound Graphite Body Seal, RPTFE Bearing (Fire Safe "By Design")
-35-	PTFE Seats and Seals
-49-	No Lubrication. Assembled Dry
-57-	Oxygen Cleaned
-65-	MPTFE Seats and Graphite Packing (Fire Safe)
-69-	Drilled and Tapped Purge Ports with Plugs
-70-	4" Extended Bonnet
-73-	316 Stainless Steel Spiral Wound Gaskets with PTFE Filler
-76-	Live Loaded (Lever)
-77-	Live Loaded (Gear, Actuator)
-80-	TFM 1600 Seats, PTFE Chevron Packing, Spiral Wound PTFE Body Seal, PEEK Bearing
-82-	Flat Face Flanges
-90-	Double Packed 4" Extended Bonnet
-9P-	Double Packed 4" Extended Bonnet with Monitoring Port
-CE-	CE Marking. See Page D-3 "Product Approvals" for Availability
-EF-	Graphite Packing (API 641 Compliant)
-EP-	Garlock EVSP Stem Packing with Spiral Wound Graphite Gasket (Fire Safe by Design)
-KF-	PCTFE Stem Bearing
-MG-	Gear Operator with Standard Handwheel
-MH-	Gear Operator with Standard Handwheel & Locking Device
-MJ-	Gear Operator with Oversize Handwheel
-MK-	Gear Operator with Oversize Handwheel & Locking Device
-MP-	Positive Material Identification
-TC-	With Test Certificate
-TD-	Tested to API Spec 6D
-ZP1-	Fugitive Emissions Packing (Viton)
-ZP2-	Fugitive Emissions Packing (Buna-N)
-ZP3-	Fugitive Emissions Packing (Kalrez)

Pressure/Temperature Ratings - Page M-28, Graph No. 41

DIMENSIONS

PART NO.	SIZE	A	B	C	D	E	F	G	H	I	J	K	L	M	N	WT.
87K-70A-01	4"	3.00	12.00	5.68	8.80	4.06	0.50	4.75	5.95	2.840	1.420	1.250	0.725	3/8-16	4.00	95
87K-70C-01	6"	4.00	15.88	7.38	9.99	5.25	0.50	5.94	7.13	2.840	1.420	1.250	0.725	3/8-16	6.00	187
87K-70E-01	8"	6.00	19.75	9.00	13.73	7.30	1.00	7.75	9.48	4.596	2.298	2.000	1.375	3/4-10	8.00	400

REV. 18JUL19

87K-700 SERIES

SUPER DUPLEX STAINLESS STEEL ASME CLASS 300 FLANGED STD. PORT BALL VALVE
10"

5 YRS WARRANTY MADE IN USA

FOR STANDARDS COMPLIANCE AND STANDARD FEATURES REFER TO PAGE D-3.

STANDARD MATERIAL LIST

	PART	MATERIAL
1	Body	ASTM A995 6A
2	Retainer	ASTM A995 6A
3	Ball	ASTM A276/A479 Alloy 2507
4	Stem	ASTM A276/A479 Alloy 2507
5	Packing Gland	ASTM A276 Type 316
6	Stem Seals	PTFE
7	Seats	TFM 1700
8	Gland Screws	ASTM A193 B8 Class 1
9	Gland Plate	316 Stainless Steel
10	Stem Bearing	RPTFE
11	Body Seal	RPTFE
12	Body Joint Stud	ASTM A193 Grade B8M
13	Body Joint Nut	ASTM A194 Grade 8

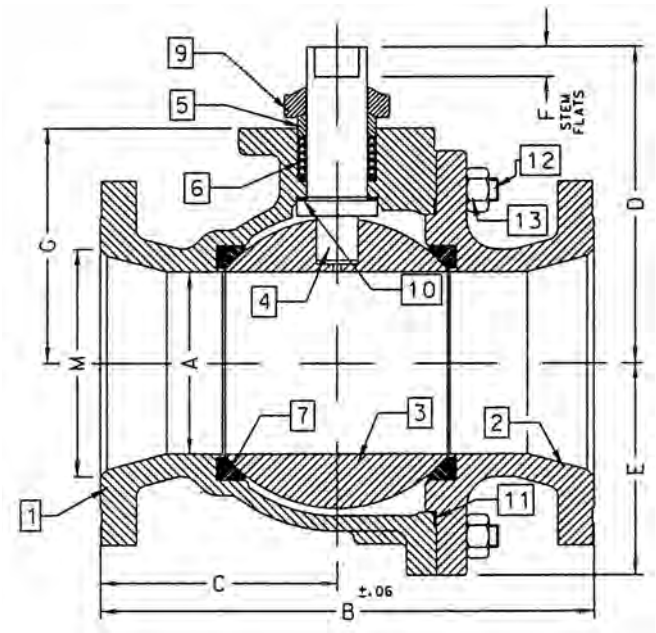

ACTUATOR MOUNTING

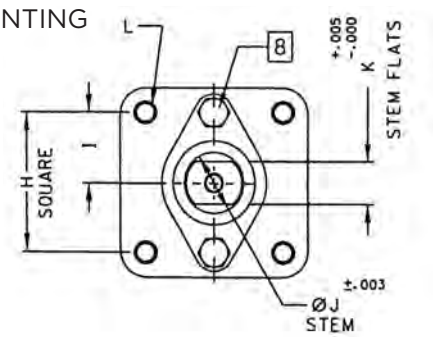

VARIATIONS AVAILABLE

- 87H - Hastelloy
- 87N - Nickel
- 87S - 304L Stainless Steel

OPTIONS AVAILABLE

(MORE INFORMATION IN SECTION J)

- Minimum quantities apply.
- To specify an option, replace the "01" standard suffix with the suffix of the option.
- To specify multiple options, replace the "01" suffix with the desired suffixes in the numerical order shown below. NOTE: Not all suffixes can be combined together.

(SUFFIX)	OPTION
-01	Standard Configuration (Less Gear Operator)
-14-	Side Vented Ball (See Page J2)
-21-	UHMWPE Seats
-24-	Graphite Packing, Spiral Wound Graphite Body Seal, RPTFE Bearing (Fire Safe "By Design")
-35-	PTFE Seats and Seals
-49-	No Lubrication. Assembled Dry
-57-	Oxygen Cleaned
-65-	MPTFE Seats and Graphite Packing (Fire Safe)
-69-	Drilled and Tapped Purge Ports with Plugs
-70-	4" Extended Bonnet
-77-	Live Loaded 87A/88A Series (Gear, Actuator)
-80-	TFM 1600 Seats, PTFE Chevron Packing, Spiral Wound PTFE Body Seal PEEK Bearing
-82-	Flat Face Flanges
-90-	Double Packed 4" Extended Bonnet
-9P-	Double Packed 4" Extended Bonnet with Monitoring Port
-CE-	CE Marking. See Page D-3 "Product Approvals" for Availability
-EF-	Graphite Packing (API 641 Compliant)
-EP-	Garlock EVSP Stem Packing with Spiral Wound Graphite Gasket (Fire Safe by Design)
-KF-	PCTFE Stem Bearing
-MG-	Gear Operator with Standard Handwheel
-MH-	Gear Operator with Standard Handwheel & Locking Device
-MJ-	Gear Operator with Oversize Handwheel
-MK-	Gear Operator with Oversize Handwheel & Locking Device
-MP-	Positive Material Identification
-TC-	With Test Certificate
-TD-	Tested to API Spec 6D
-ZP1-	Fugitive Emissions Packing (Viton)
-ZP2-	Fugitive Emissions Packing (Buna-N)
-ZP3-	Fugitive Emissions Packing (Kalrez)

Pressure/Temperature Ratings - Page M-28, Graph No. 41

DIMENSIONS

PART NO.	SIZE	A	B	C	D	E	F	G	H	I	J	K	L	M
87K-70G-01	10"	8.00	22.38	10.69	12.83	9.56	1.00	10.22	4.596	2.298	2.000	1.375	3/4-10	10.00

REV. 18JUL19

aalberts integrated piping systems

87K-900 SERIES

SUPER DUPLEX STAINLESS STEEL ASME CLASS 300 FLANGED FULL PORT BALL VALVE
1/2" THRU 1"

5 YEAR WARRANTY MADE IN USA

FOR STANDARDS COMPLIANCE AND STANDARD FEATURES REFER TO PAGE D-3.

STANDARD MATERIAL LIST

	PART	MATERIAL
1	Body	ASTM A995 6A
2	Retainer	ASTM A995 6A
3	Ball	ASTM A276/A479 Alloy 2507 or A995 6A
4	Stem	ASTM A276/A479 Alloy 2507
5	Packing Gland	ASTM A276 Type 316
6	Stem Seals	PTFE
7	Seats	RPTFE
8	Gland Screws	ASTM A193 B8 Class 1
9	Gland Plate	302 or 304 Stainless Steel
10	Stem Nut	316 Stainless Steel
11	Lever	302 or 304 with Vinyl Grip
12	Stem Bearing	RPTFE
13	Stop	ASTM A276 Type 316
14	Stop Screw	18-8 Stainless Steel
15	Lock Plate	302 or 304 Stainless Steel
16	Body Seal	RPTFE
17	Lockwasher	302 or 304 Stainless Steel
18	Grounding Spring	Stainless Steel

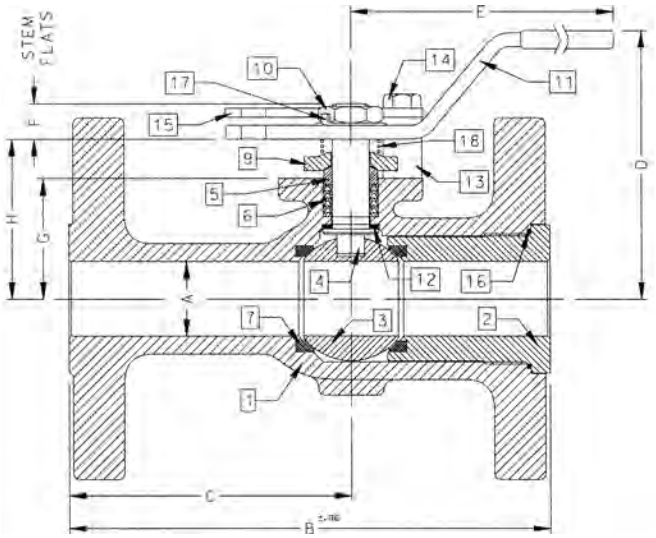

ACTUATOR MOUNTING

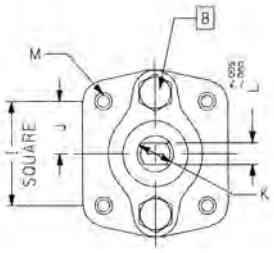

VARIATIONS AVAILABLE

- 87H - Hastelloy
- 87M - Monel
- 87N - Nickel
- 87S - 304L Stainless Steel

OPTIONS AVAILABLE

(MORE INFORMATION IN SECTION J)

- Minimum quantities apply.
- To specify an option, replace the "01" standard suffix with the suffix of the option.
- To specify multiple options, replace the "01" suffix with the desired suffixes in the numerical order shown below. NOTE: Not all suffixes can be combined together.

(SUFFIX)	OPTION
-01	Standard Configuration
-04-	2-1/4" Stem Extension (Carbon Steel, Zinc Plated)
-14-	Side Vented Ball (Uni-Directional)
-15-	Wheel Handle, Steel
-21-	UHMWPE Seats
-24-	Graphite Packing, Spiral Wound Graphite Body Seal, RPTFE Bearing (Fire Safe "By Design")
-35-	PTFE Seats and Seals
-38-	PEEK Seats and Graphite Packing
-49-	No Lubrication. Assembled Dry
-57-	Oxygen Cleaned
-65-	MPTFE Seats and Graphite Packing (Fire Safe)
-69-	Drilled and Tapped Purge Port with Plugs
-70-	4" Extended Bonnet
-73-	316 Stainless Steel Spiral Wound Gaskets with PTFE Filler
-76-	Live Loaded (Lever)
-77-	Live Loaded (Gear, Actuator)
-80-	TFM 1600 Seats, PTFE Chevron Packing, Spiral Wound PTFE Body Seal, PEEK Bearing
-82-	Flat Face Flanges
-90-	Double Packed 4" Extended Bonnet
-9P-	Double Packed 4" Extended Bonnet with Monitoring Port
-CE-	CE Marking. See Page D-3 "Product Approvals" for Availability
-EF-	Graphite Packing (API 641 Compliant) (Not Available on 1/2" Size)
-EP-	Garlock EVSP Stem Packing with Spiral Wound Graphite Gasket (Fire Safe by Design)
-KF-	PCTFE Stem Bearing
-MP-	Positive Material Identification
-TC-	With Test Certificate
-TD-	Tested to API Spec 6D
-ZP1-	Fugitive Emissions Packing (Viton)
-ZP2-	Fugitive Emissions Packing (Buna-N)
-ZP3-	Fugitive Emissions Packing (Kalrez)

Pressure/Temperature Ratings - Page M-28, Graph No. 41

DIMENSIONS

PART NO.	SIZE	A	B	C	D	E	F	G	H	I	J	K	L	M	WT.
87K-903-01A	1/2"	0.50	5.50	3.31	2.74	5.12	0.24	1.09	1.44	1.000	0.500	0.375	0.245	10-24	6
87K-904-01A	3/4"	0.75	6.00	3.56	3.43	5.54	0.22	1.65	2.13	1.392	0.696	0.500	0.287	1/4-20	9
87K-905-01	1"	1.00	6.50	3.82	4.62	6.53	0.47	1.62	2.15	1.392	0.696	0.500	0.287	1/4-20	11

REV. 10SEP19

87K-900 SERIES

SUPER DUPLEX STAINLESS STEEL ASME CLASS 300 FLANGED FULL PORT BALL VALVE
1-1/2" THRU 2-1/2"

5 YEAR WARRANTY MADE IN USA

FOR STANDARDS COMPLIANCE AND STANDARD FEATURES REFER TO PAGE D-3.

STANDARD MATERIAL LIST

	PART	MATERIAL
1	Body	ASTM A995 6A
2	Retainer	ASTM A995 6A
3	Ball	ASTM A276/A479 Alloy 2507 or A995 6A
4	Stem	ASTM A276/A479 Alloy 2507
5	Packing Gland	ASTM A276 Type 316
6	Stem Seals	PTFE
7	Seats	TFM 1700
8	Gland Screws	ASTM A193 B8 Class 1
9	Gland Plate	316 Stainless Steel
10	Stem Nut	18-8 Stainless Steel
11	Lever	316 Stainless Steel
12	Stem Bearing	RPTFE
13	Stop	ASTM A276 Type 316
14	Stop Screw	316 Stainless Steel
15	Lock Plate	302 or 304 Stainless Steel
16	Body Seal	RPTFE
17	Grounding Spring	Stainless Steel
18	Body Joint Stud	ASTM A193 Grade B8M
19	Body Joint Nut	ASTM A194 Grade 8
20	Lockwasher	302 or 304 Stainless Steel

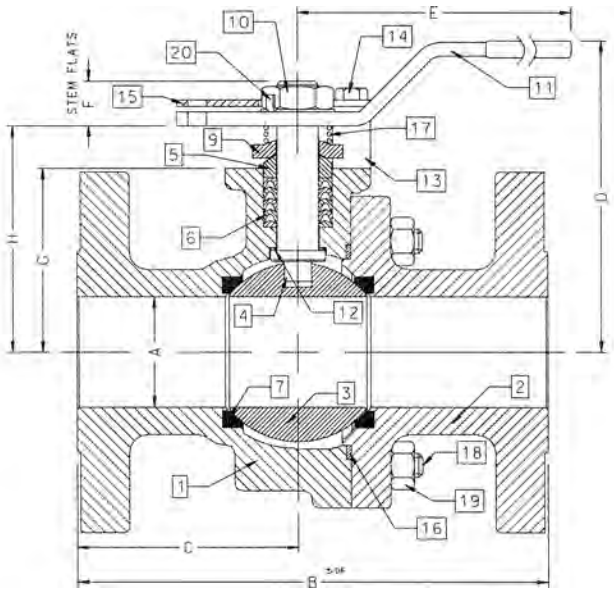

ACTUATOR MOUNTING

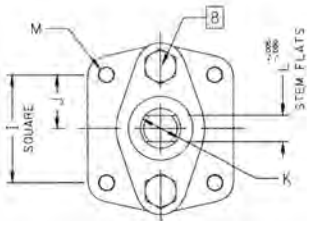

VARIATIONS AVAILABLE

- 87H - Hastelloy
- 87M - Monel
- 87N - Nickel
- 87S - 304L Stainless Steel

OPTIONS AVAILABLE

(MORE INFORMATION IN SECTION J)

- Minimum quantities apply.
- To specify an option, replace the "01" standard suffix with the suffix of the option.
- To specify multiple options, replace the "01" suffix with the desired suffixes in the numerical order shown below. NOTE: Not all suffixes can be combined together.

(SUFFIX)	OPTION
-01	Standard Configuration
-04-	2-1/4" Stem Extension (Carbon Steel, Zinc Plated)
-14-	Side Vented Ball (Uni-Directional)
-21-	UHMWPE Seats
-24-	Graphite Packing, Spiral Wound Graphite Body Seal, RPTFE Bearing (Fire Safe "By Design")
-35-	PTFE Seats and Seals
-38-	PEEK Seats and Graphite Packing (3" Only)
-49-	No Lubrication. Assembled Dry
-57-	Oxygen Cleaned
-65-	MPTFE Seats and Graphite Packing (Fire Safe)
-69-	Drilled and Tapped Purge Ports with Plugs
-70-	4" Extended Bonnet
-73-	316 Stainless Steel Spiral Wound Gaskets with PTFE Filler
-76-	Live Loaded (Lever)
-77-	Live Loaded (Gear, Actuator)
-80-	TFM 1600 Seats, PTFE Chevron Packing, Spiral Wound PTFE Body Seal, PEEK Bearing
-82-	Flat Face Flanges
-90-	Double Packed 4" Extended Bonnet
-9P-	Double Packed 4" Extended Bonnet with Monitoring Port
-CE-	CE Marking. See Page D-3 "Product Approvals" for Availability
-EF-	Graphite Packing (API 641 Compliant)
-EP-	Garlock EVSP Stem Packing with Spiral Wound Graphite Gasket (Fire Safe by Design)
-KF-	PCTFE Stem Bearing
-MG-	Gear Operator with Standard Handwheel
-MH-	Gear Operator with Standard Handwheel & Locking Device
-MJ-	Gear Operator with Oversize Handwheel
-MK-	Gear Operator with Oversize Handwheel & Locking Device
-MP-	Positive Material Identification
-TC-	With Test Certificate
-TD-	Tested to API Spec 6D
-ZP1-	Fugitive Emissions Packing (Viton)
-ZP2-	Fugitive Emissions Packing (Buna-N)
-ZP3-	Fugitive Emissions Packing (Kalrez)

Pressure/Temperature Ratings - Page M-28, Graph No. 41

DIMENSIONS

PART NO.	SIZE	A	B	C	D	E	F	G	H	I	J	K	L	M	WT.
87K-907-01	1-1/2"	1.50	7.50	3.50	4.62	6.65	0.72	2.41	3.09	1.949	0.974	0.625	0.412	5/16-18	21
87K-908-01	2"	2.00	8.50	4.00	5.61	8.41	0.80	3.31	4.08	1.949	0.974	0.750	0.477	5/16-18	37
87K-909-01	2-1/2"	2.50	9.50	4.44	6.24	8.41	0.80	3.94	4.71	1.949	0.974	0.750	0.477	5/16-18	57

REV. 18JUL19

aalberts integrated piping systems

87K-900 SERIES

SUPER DUPLEX STAINLESS STEEL ASME CLASS 300 FLANGED FULL PORT BALL VALVE
3" THRU 6"

5 YEAR WARRANTY MADE IN USA

FOR STANDARDS COMPLIANCE AND STANDARD FEATURES REFER TO PAGE D-3.

STANDARD MATERIAL LIST

	PART	MATERIAL
1	Body	ASTM A995 6A
2	Retainer	ASTM A995 6A
3	Ball	ASTM A276/A479 Alloy 2507 or A995 6A
4	Stem	ASTM A276/A479 Alloy 2507
5	Packing Gland	ASTM A276 Type 316
6	Stem Seals	PTFE
7	Seats	TFM 1700
8	Gland Screws	ASTM A193 B8 Class 1
9	Gland Plate	316 Stainless Steel
10	Adapter Screw	18-8 Stainless Steel
11	Handle Adapter	316 Stainless Steel
12	Stem Bearing	RPTFE
13	Stop	ASTM A276 Type 316
14	Stop Screw	316 Stainless Steel
15	Lock Plate	302 or 304 Stainless Steel
16	Body Seal	RPTFE
17	Grounding Spring	Stainless Steel
18	Body Joint Stud	ASTM A193 Grade B8M
19	Body Joint Nut	ASTM A194 Grade 8
20	Pipe Handle	Galvanized Steel (not shown)

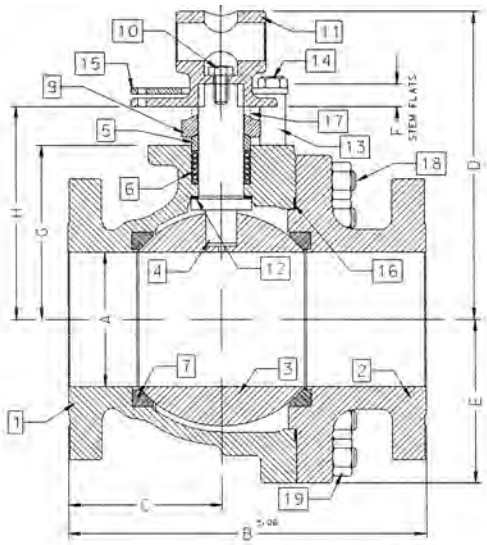

ACTUATOR MOUNTING

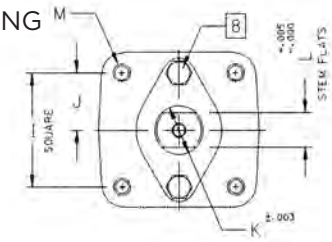

VARIATIONS AVAILABLE

- 87H - Hastelloy
- 87N - Nickel
- 87S - 304L Stainless Steel

OPTIONS AVAILABLE

(MORE INFORMATION IN SECTION J)

- Minimum quantities apply.
- To specify an option, replace the "01" standard suffix with the suffix of the option.
- To specify multiple options, replace the "01" suffix with the desired suffixes in the numerical order shown below. NOTE: Not all suffixes can be combined together.

(SUFFIX)	OPTION
-01	Standard Configuration
-14-	Side Vented Ball (Uni-Directional)
-21-	UHMWPE Seats
-24-	Graphite Packing, Spiral Wound Graphite Body Seal, RPTFE Bearing (Fire Safe "By Design")
-35-	PTFE Seats and Seals
-38-	PEEK Seats and Graphite Packing (3" Only)
-49-	No Lubrication. Assembled Dry
-57-	Oxygen Cleaned
-65-	MPTFE Seats and Graphite Packing (Fire Safe)
-69-	Drilled and Tapped Purge Port with Plugs
-70-	4" Extended Bonnet
-73-	316 Stainless Steel Spiral Wound Gaskets with PTFE Filler
-76-	Live Loaded (Lever)
-77-	Live Loaded (Gear, Actuator)
-80-	TFM 1600 Seats, PTFE Chevron Packing, Spiral Wound PTFE Body Seal, PEEK Bearing
-82-	Flat Face Flanges
-90-	Double Packed 4" Extended Bonnet
-9P-	Double Packed 4" Extended Bonnet with Monitoring Port
-CE-	CE Marking. See Page D-3 "Product Approvals" for Availability
-EF-	Graphite Packing (API 641 Compliant)
-EP-	Garlock EVSP Stem Packing with Spiral Wound Graphite Gasket (Fire Safe by Design)
-KF-	PCTFE Stem Bearing
-MG-	Gear Operator with Standard Handwheel
-MH-	Gear Operator with Standard Handwheel & Locking Device
-MJ-	Gear Operator with Oversize Handwheel
-MK-	Gear Operator with Oversize Handwheel & Locking Device
-MP-	Positive Material Identification
-TC-	With Test Certificate
-TD-	Tested to API Spec 6D
-ZP1-	Fugitive Emissions Packing (Viton)
-ZP2-	Fugitive Emissions Packing (Buna-N)
-ZP3-	Fugitive Emissions Packing (Kalrez)

Pressure/Temperature Ratings - Page M-28, Graph No. 41

DIMENSIONS

PART NO.	SIZE	A	B	C	D	E	F	G	H	I	J	K	L	M	WT.
87K-900-01	3"	3.00	11.12	5.24	8.80	4.06	0.50	4.75	5.95	2.840	1.420	1.250	0.725	3/8-16	78
87K-90A-01	4"	4.00	12.00	5.44	9.99	5.25	0.50	5.94	7.13	2.840	1.420	1.250	0.725	3/8-16	133
87K-90C-01	6"	6.00	15.88	6.82	13.73	7.30	1.00	7.75	9.48	4.596	2.298	2.000	1.375	3/4-10	329

REV. 18JUL19

87K-900 SERIES

SUPER DUPLEX STAINLESS STEEL ASME CLASS 300 FLANGED FULL PORT BALL VALVE
8" THRU 12"

5 YEAR WARRANTY MADE IN USA

FOR STANDARDS COMPLIANCE AND STANDARD FEATURES REFER TO PAGE D-3.

STANDARD MATERIAL LIST

	PART	MATERIAL
1	Body	ASTM A995 6A
2	Retainer	ASTM A995 6A
3	Ball	ASTM A276/A479 Alloy 2507 or A995 6A
4	Stem	ASTM A276/A479 Alloy 2507
5	Packing Gland	ASTM A276 Type 316
6	Stem Seals	PTFE
7	Seats	TFM 1700
8	Gland Screws	ASTM A193 B8 Class 1
9	Gland Plate	316 Stainless Steel
10	Stem Bearing	RPTFE
11	Body Seal	RPTFE
12	Body Joint Stud	ASTM A193 Grade B8M
13	Body Joint Nut	ASTM A194 Grade 8

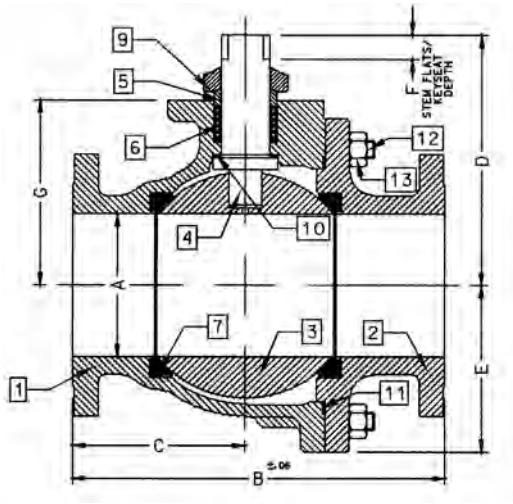

VARIATIONS AVAILABLE

- 87H - Hastelloy
- 87N - Nickel
- 87S - 304L Stainless Steel

OPTIONS AVAILABLE

(MORE INFORMATION IN SECTION J)

- Minimum quantities apply.
- To specify an option, replace the "01" standard suffix with the suffix of the option.
- To specify multiple options, replace the "01" suffix with the desired suffixes in the numerical order shown below. NOTE: Not all suffixes can be combined together.

(SUFFIX)	OPTION
-01	Standard Configuration
-14-	Side Vented Ball (Uni-Directional)
-21-	UHMWPE Seats
-24-	Graphite Packing, Spiral Wound Graphite Body Seal, RPTFE Bearing (Fire Safe "By Design")
-35-	PTFE Seats and Seals
-49-	No Lubrication. Assembled Dry
-57-	Oxygen Cleaned
-65-	MPTFE Seats and Graphite Packing (Fire Safe)
-69-	Drilled and Tapped Purge Ports with Plugs
-70-	4" Extended Bonnet (8" Only)
-77-	Live Loaded (Gear, Actuator)
-80-	TFM 1600 Seats, PTFE Chevron Packing, Spiral Wound PTFE Body Seal, PEEK Bearing
-82-	Flat Face Flanges
-90-	Double Packed 4" Extended Bonnet
-9P-	Double Packed 4" Extended Bonnet with Monitoring Port
-CE-	CE Marking. See Page D-3 "Product Approvals" for Availability
-EF-	Graphite Packing (API 641 Compliant)
-EP-	Garlock EVSP Stem Packing with Spiral Wound Graphite Gasket (Fire Safe by Design)
-KF-	PCTFE Stem Bearing
-MG-	Gear Operator with Standard Handwheel
-MH-	Gear Operator with Standard Handwheel & Locking Device
-MJ-	Gear Operator with Oversize Handwheel
-MK-	Gear Operator with Oversize Handwheel & Locking Device
-MP-	Positive Material Identification
-TC-	With Test Certificate
-TD-	Tested to API Spec 6D
-ZP1-	Fugitive Emissions Packing (Viton)
-ZP2-	Fugitive Emissions Packing (Buna-N)
-ZP3-	Fugitive Emissions Packing (Kalrez)

Pressure/Temperature Ratings - Page M-28, Graph No. 41

ACTUATOR MOUNTING

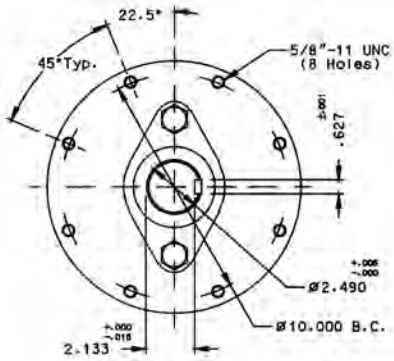

10" & 12"

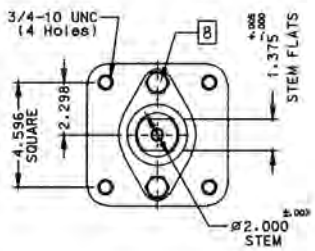

8"

DIMENSIONS

PART NO.	SIZE	A	B	C	D	E	F	G
87K-90E-01	8"	8.00	19.75	9.38	12.83	9.56	1.00	10.22
87K-90G-01	10"	10.00	22.38	10.95	18.57	11.33	2.31	12.80
87K-90H-01	12"	12.00	25.50	12.84	20.31	13.40	2.31	14.92

REV. 18JUL19

aalberts integrated piping systems

88A-100 SERIES

CARBON STEEL ASME CLASS 150 FLANGED STD. PORT BALL VALVE
1-1/2" THRU 2"

5 YEAR WARRANTY MADE IN USA

FOR STANDARDS COMPLIANCE AND STANDARD FEATURES REFER TO PAGE D-3.

STANDARD MATERIAL LIST

	PART	MATERIAL
1	Body	ASTM A216 WCB
2	Retainer	ASTM A108 Type 1215
3	Ball	ASTM A108, Carbon Steel, Chrome Plated or ASTM A276, Type 316 Stainless Steel
4	Stem	ASTM A108 Type 1215
5	Packing Gland	ASTM A108 Type 1215
6	Stem Seals	PTFE
7	Seats	TFM 1700
8	Gland Screws	ASTM A193 B7
9	Gland Plate	302 or 304 Stainless Steel
10	Stem Nut	316 Stainless Steel
11	Lever	ASTM A366 Steel with Vinyl Grip
12	Stem Bearing	RPTFE
13	Stop	ASTM A108 Type 1215
14	Stop Screw	SAE J429 Grade 2
15	Lock Plate	ASTM A366 Steel
16	Body Seal	RPTFE
17	Lockwasher	302 or 304 Stainless Steel
18	Grounding Spring	Stainless Steel

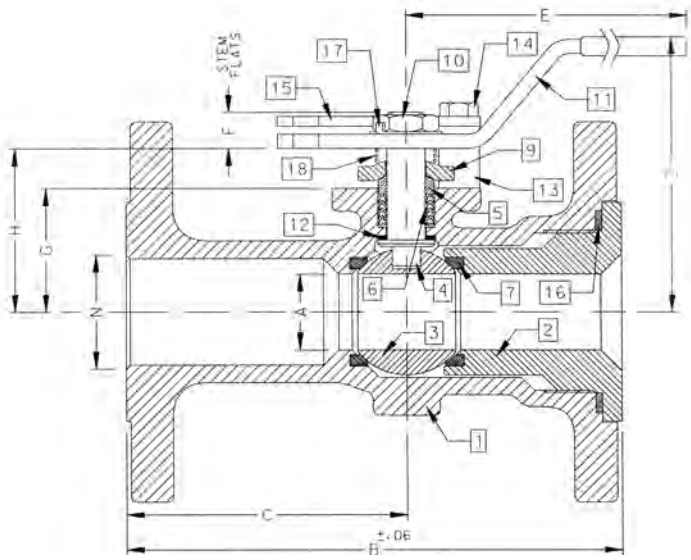

ACTUATOR MOUNTING

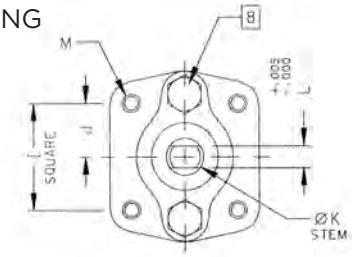

VARIATIONS AVAILABLE

- 88A-140 Series (316 Stainless Steel Ball & Stem)
- 88A-130 Series (Ni-Cu Ball & Stem)

OPTIONS AVAILABLE

(MORE INFORMATION IN SECTION J)

- Minimum quantities apply.
- To specify an option, replace the "01" standard suffix with the suffix of the option.
- To specify multiple options, replace the "01" suffix with the desired suffixes in the numerical order shown below. NOTE: Not all suffixes can be combined together.

(SUFFIX)	OPTION
-01	Standard Configuration
-04-	2-1/4" Stem Extension (Carbon Steel, Zinc Plated)
-10-	Stainless Steel Lever and Nut
-14-	Side Vented Ball (Uni-Directional). Not Available with Plated CS Ball
-15-	Wheel Handle, Steel
-21-	UHMWPE Seats
-24-	Graphite Packing, Spiral Wound Graphite Body Seal, RPTFE Bearing (API 607, 5th Edition, ISO 10497-5:2004)
-26-	Chlorine Service. Vented. Special Cleaning. Assembled Dry. (for CS, Hastelloy and Ni-Cu Valves. Ball Must be Hastelloy or Ni-CU)
-35-	PTFE Seats and Seals
-38-	PEEK Seats and Graphite Packing
-49-	No Lubrication. Assembled Dry
-65-	MPTFE Seats and Graphite Packing (Fire Safe)
-67-	Cleaned for Industrial Gases
-69-	Drilled and Tapped Purge Port with Plug
-70-	4" Extended Bonnet
-73-	316 Stainless Steel Spiral Wound Gaskets with PTFE Filler
-76-	Live Loaded (Lever)
-77-	Live Loaded (Gear, Actuator)
-80-	TFM 1600 Seats, PTFE Chevron Packing, Spiral Wound PTFE Body Seal, PEEK Bearing
-82-	Flat Face Flanges
-90-	Double Packed 4" Extended Bonnet
-9P-	Double Packed 4" Extended Bonnet with Monitoring Port
-CE-	CE Marking. See Page D-3 "Product Approvals" for Availability
-EF-	Graphite Packing (API 641 Compliant)
-EP-	Garlock EVSP Stem Packing with Spiral Wound Graphite Gasket (Fire Safe by Design)
-KF-	PCTFE Stem Bearing
-TC-	With Test Certificate
-TD-	Tested to API Spec 6D
-UA-	AIS (American Iron & Steel) Compliant
-UL-	UL & CSA Listed (with Markings)
-ZP1-	Fugitive Emissions Packing (Viton)
-ZP2-	Fugitive Emissions Packing (Buna-N)
-ZP3-	Fugitive Emissions Packing (Kalrez)

Pressure/Temperature Ratings - Page M-9, Graph No. 1

DIMENSIONS

PART NO.	SIZE	A	B	C	D	E	F	G	H	I	J	K	L	M	N	WT.
88A-107-01A	1-1/2"	1.25	6.50	3.50	4.85	6.53	0.47	1.85	2.38	1.392	0.696	0.500	0.287	1/4-20	1.50	9
88A-108-01	2"	1.50	7.00	3.69	4.62	6.65	0.72	2.41	3.09	1.949	0.974	0.625	0.412	5/16-18	2.00	18

REV. 18JUL19

88A-100 SERIES

CARBON STEEL ASME CLASS 150 FLANGED STD. PORT BALL VALVE
2-1/2" THRU 3"

5 YEAR WARRANTY MADE IN USA

FOR STANDARDS COMPLIANCE AND STANDARD FEATURES REFER TO PAGE D-3.

STANDARD MATERIAL LIST

	PART	MATERIAL
1	Body	ASTM A216 WCB
2	Retainer	ASTM A216 WCB
3	Ball	ASTM A108 Type 1215 or ASTM A216 WCB Chrome Plated
4	Stem	ASTM A108 Type 1215
5	Packing Gland	ASTM A108 Type 1215
6	Stem Seals	PTFE
7	Seats	TFM 1700
8	Gland Screws	ASTM A193 B7
9	Gland Plate	302 or 304 Stainless Steel
10	Stem Nut	ASTM A194 Grade 8
11	Lever	ASTM A366 Steel with Vinyl Grip
12	Stem Bearing	RPTFE
13	Stop	ASTM A108 Type 1215
14	Stop Screw	SAE J429 Grade 2
15	Lock Plate	ASTM A366 Steel
16	Body Seal	RPTFE
17	Grounding Spring	Stainless Steel
18	Body Joint Stud	ASTM A193 Grade B7
19	Body Joint Nut	ASTM A194 Grade 2H
20	Lockwasher	302 or 304 Stainless Steel

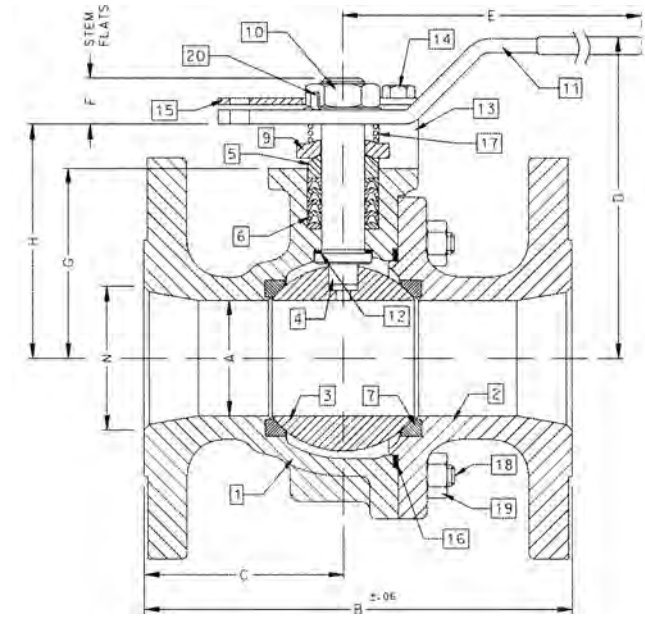

ACTUATOR MOUNTING

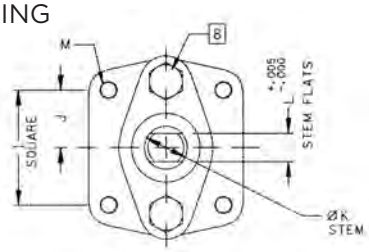

VARIATIONS AVAILABLE

- 88A-140 Series (316 Stainless Steel Ball & Stem)
- 88A-130 Series (Ni-Cu Ball & Stem)

OPTIONS AVAILABLE

(MORE INFORMATION IN SECTION J)

- Minimum quantities apply.
- To specify an option, replace the "01" standard suffix with the suffix of the option.
- To specify multiple options, replace the "01" suffix with the desired suffixes in the numerical order shown below. NOTE: Not all suffixes can be combined together.

(SUFFIX)	OPTION
-01	Standard Configuration
-04-	2-1/4" Stem Extension (Carbon Steel, Zinc Plated)
-10-	Stainless Steel Lever and Nut
-14-	Side Vented Ball (Uni-Directional). Not Available with Plated CS Ball
-21-	UHMWPE Seats
-24-	Graphite Packing, Spiral Wound Graphite Body Seal, RPTFE Bearing (API 607, 6th Edition, ISO 10497:2010)
-26-	Chlorine Service. Vented. Special Cleaning. Assembled Dry. (for CS, Hastelloy and Ni-Cu Valves. Ball Must be Hastelloy or Ni-CU)
-35-	PTFE Seats and Seals
-38-	PEEK Seats and Graphite Packing
-49-	No Lubrication. Assembled Dry
-59-	Stainless Steel External Trim
-65-	MPTFE Seats and Graphite Packing (Fire Safe)
-67-	Cleaned for Industrial Gases
-69-	Drilled and Tapped Purge Port with Plugs
-70-	4" Extended Bonnet
-73-	316 Stainless Steel Spiral Wound Gaskets with PTFE Filler
-76-	Live Loaded (Lever)
-77-	Live Loaded (Gear, Actuator)
-80-	TFM 1600 Seats, PTFE Chevron Packing, Spiral Wound PTFE Body Seal, PEEK Bearing
-82-	Flat Face Flanges
-90-	Double Packed 4" Extended Bonnet
-9P-	Double Packed 4" Extended Bonnet with Monitoring Port
-CE-	CE Marking. See Page D-3 "Product Approvals" for Availability
-EF-	Graphite Packing (API 641 Compliant)
-EP-	Garlock EVSP Stem Packing with Spiral Wound Graphite Gasket (Fire Safe by Design)
-KF-	PCTFE Stem Bearing
-MG-	Gear Operator with Standard Handwheel
-MH-	Gear Operator with Standard Handwheel & Locking Device
-MJ-	Gear Operator with Oversize Handwheel
-MK-	Gear Operator with Oversize Handwheel & Locking Device
-TC-	With Test Certificate
-TD-	Tested to API Spec 6D
-UA-	AIS (American Iron & Steel) Compliant
-UL-	UL & CSA Listed (with Markings)
-ZP1-	Fugitive Emissions Packing (Viton)
-ZP2-	Fugitive Emissions Packing (Buna-N)
-ZP3-	Fugitive Emissions Packing (Kalrez)

Pressure/Temperature Ratings - Page M-9, Graph No. 1

DIMENSIONS

PART NO.	SIZE	A	B	C	D	E	F	G	H	I	J	K	L	M	N	WT.
88A-109-01	2-1/2"	2.00	7.50	3.50	5.61	8.41	0.80	3.31	4.08	1.949	0.974	0.750	0.477	5/16-18	2.50	27
88A-100-01	3"	2.50	8.00	3.51	6.24	8.41	0.80	3.94	4.71	1.949	0.974	0.750	0.477	5/16-18	3.00	34

REV. 18JUL19

aalberts integrated piping systems

88A-100 SERIES

CARBON STEEL ASME CLASS 150 FLANGED STD. PORT BALL VALVE
4" THRU 8"

5 YEAR WARRANTY MADE IN USA

FOR STANDARDS COMPLIANCE AND STANDARD FEATURES REFER TO PAGE D-3.

STANDARD MATERIAL LIST

	PART	MATERIAL
1	Body	ASTM A216 WCB
2	Retainer	ASTM A216 WCB
3	Ball	ASTM A108 Type 1215 or ASTM A216 WCB Chrome Plated
4	Stem	ASTM A108 Type 1215
5	Packing Gland	ASTM A108 Type 1215
6	Stem Seals	PTFE
7	Seats	TFM 1700
8	Gland Screws	ASTM A193 B7
9	Gland Plate	316 Stainless Steel
10	Adaptor Screw	316 Stainless Steel
11	Handle Adapter	ASTM A366 Steel with Vinyl Grip
12	Stem Bearing	RPTFE
13	Stop	ASTM A108 Type 1215
14	Stop Screw	SAE J429 Grade 2
15	Lock Plate	ASTM A366 Steel
16	Body Seal	RPTFE
17	Grounding Spring	Stainless Steel
18	Body Joint Stud	ASTM A193 Grade B7
19	Body Joint Nut	ASTM A194 Grade 2H
20	Adapter Screw	18-8 Stainless Steel
21	Pipe Handle	Galvanized Steel (not shown)

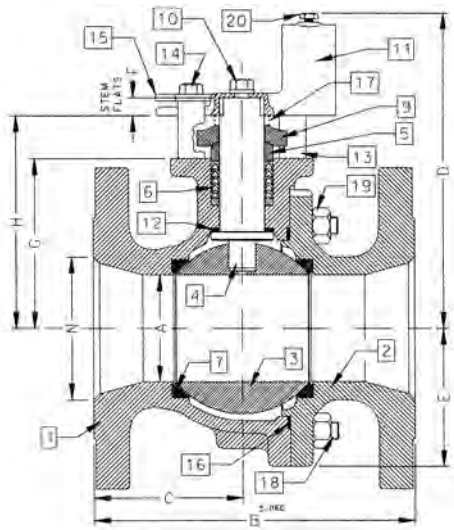

ACTUATOR MOUNTING

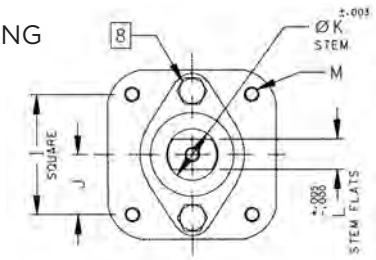

VARIATIONS AVAILABLE

- 88A-140 Series (316 Stainless Steel Ball & Stem)
- 88A-130 Series (Ni-Cu Ball & Stem)

OPTIONS AVAILABLE

(MORE INFORMATION IN SECTION J)

- Minimum quantities apply.
- To specify an option, replace the "01" standard suffix with the suffix of the option.
- To specify multiple options, replace the "01" suffix with the desired suffixes in the numerical order shown below. NOTE: Not all suffixes can be combined together.

(SUFFIX)	OPTION
-01	Standard Configuration
-14-	Side Vented Ball (Uni-Directional). Not Available with Plated CS Ball
-21-	UHMWPE Seats
-24-	Fire Safe - Graphite Packing & Seals (API 607, 5th edition, ISO 10497-5:2004) 4" & 6" (API 607, 6th edition, ISO 0497:2010) 8"
-26-	Chlorine Service. Vented. Special Cleaning. Assembled Dry. (for CS, Hastelloy and Ni-Cu Valves. Ball Must be Hastelloy or Ni-CU)
-35-	PTFE Seats and Seals
-49-	No Lubrication. Assembled Dry
-59-	Stainless Steel External Trim
-65-	MPTFE Seats and Graphite Packing (Fire Safe)
-67-	Cleaned for Industrial Gases
-69-	Drilled and Tapped Purge Ports with Plugs
-70-	4" Extended Bonnet
-73-	316 Stainless Steel Spiral Wound Gaskets with PTFE Filler
-76-	Live Loaded (Lever)
-77-	Live Loaded (Gear, Actuator)
-80-	TFM 1600 Seats, PTFE Chevron Packing, Spiral Wound PTFE Body Seal, PEEK Bearing
-82-	Flat Face Flanges
-90-	Double Packed 4" Extended Bonnet
-9P-	Double Packed 4" Extended Bonnet with Monitoring Port
-CE-	CE Marking. See Page D-3 "Product Approvals" for Availability
-EF-	Graphite Packing (API 641 Compliant)
-EP-	Garlock EVSP Stem Packing with Spiral Wound Graphite Gasket (Fire Safe by Design)
-KF-	PCTFE Stem Bearing
-MG-	Gear Operator with Standard Handwheel
-MH-	Gear Operator with Standard Handwheel & Locking Device
-MJ-	Gear Operator with Oversize Handwheel
-MK-	Gear Operator with Oversize Handwheel & Locking Device
-TC-	With Test Certificate
-TD-	Tested to API Spec 6D
-UA-	AIS (American Iron & Steel) Compliant
-UL-	UL & CSA Listed (with Markings)
-ZP1-	Fugitive Emissions Packing (Viton)
-ZP2-	Fugitive Emissions Packing (Buna-N)
-ZP3-	Fugitive Emissions Packing (Kalrez)

Pressure/Temperature Ratings - Page M-9, Graph No. 1

DIMENSIONS

PART NO.	SIZE	A	B	C	D	E	F	G	H	I	J	K	L	M	N	WT.
88A-10A-01	4"	3.00	9.00	4.18	8.80	3.88	0.50	4.75	5.95	2.840	1.420	1.250	0.725	3/8-16	4.00	73
88A-10C-01	6"	4.00	10.50	4.69	9.99	5.13	0.50	5.94	7.13	2.840	1.420	1.250	0.725	3/8-16	6.00	117
88A-10E-01	8"	6.00	18.00	9.00	13.73	7.00	1.00	7.75	9.48	4.596	2.298	2.000	1.375	3/4-10	8.00	310

REV. 18JUL19

88A-100 SERIES

CARBON STEEL ASME CLASS 150 FLANGED STD. PORT BALL VALVE
10"

5 YEAR WARRANTY MADE IN USA

FOR STANDARDS COMPLIANCE AND STANDARD FEATURES REFER TO PAGE D-3.

STANDARD MATERIAL LIST

	PART	MATERIAL
1	Body	ASTM A216 WCB
2	Retainer	ASTM A216 WCB
3	Ball	ASTM A108 Type 1215 or 216 WCB Chrome Plated
4	Stem	ASTM A108 Type 1215
5	Packing Gland	ASTM A108 Type 1215
6	Stem Seals	PTFE
7	Seats	TFM 1700
8	Gland Screws	ASTM A193 B7
9	Gland Plate	316 Stainless Steel
10	Stem Bearing	RPTFE
11	Body Seal	RPTFE
12	Body Joint Stud	ASTM A193 Grade B7
13	Body Joint Nut	ASTM A194 Grade 2H

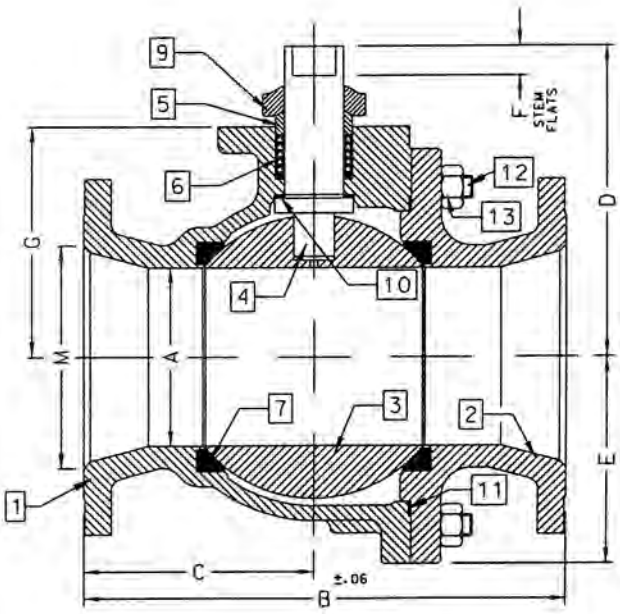

ACTUATOR MOUNTING

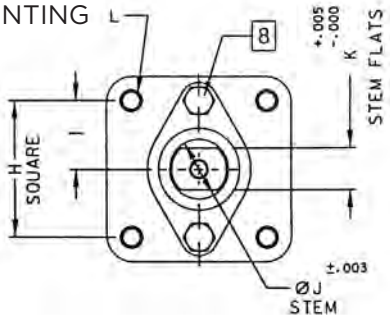

VARIATIONS AVAILABLE

- 88A-130 Series (Ni-Cu Ball & Stem)
- 88A-140 Series (316 Stainless Steel Ball & Stem)

OPTIONS AVAILABLE

(MORE INFORMATION IN SECTION J)

- Minimum quantities apply.
- To specify an option, replace the "01" standard suffix with the suffix of the option.
- To specify multiple options, replace the "01" suffix with the desired suffixes in the numerical order shown below. NOTE: Not all suffixes can be combined together.

(SUFFIX)	OPTION
-01	Standard Configuration
-14-	Side Vented Ball (Uni-Directional). Not Available with Plated CS Ball
-21-	UHMWPE Seats
-24-	Graphite Packing, Spiral Wound Graphite Body Seal, RPTFE Bearing (API 607, 5th Edition, ISO 10497-5:2004)
-26-	Chlorine Service. Vented. Special Cleaning. Assembled Dry. (for CS, Hastelloy and Ni-Cu Valves. Ball Must be Hastelloy or Ni-CU)
-35-	PTFE Seats and Seals
-49-	No Lubrication. Assembled Dry
-65-	MPTFE Seats and Graphite Packing (Fire Safe)
-67-	Cleaned for Industrial Gases
-69-	Drilled and Tapped Purge Port with Plugs
-70-	4" Extended Bonnet
-77-	Live Loaded (Gear, Actuator)
-80-	TFM 1600 Seats, PTFE Chevron Packing, Spiral Wound PTFE Body Seal, PEEK Bearing
-82-	Flat Face Flanges
-90-	Double Packed 4" Extended Bonnet
-9P-	Double Packed 4" Extended Bonnet with Monitoring Port
-CE-	CE Marking. See Page D-3 "Product Approvals" for Availability
-EF-	Graphite Packing (API 641 Compliant)
-EP-	Garlock EVSP Stem Packing with Spiral Wound Graphite Gasket (Fire Safe by Design)
-KF-	PCTFE Stem Bearing
-MG-	Gear Operator with Standard Handwheel
-MH-	Gear Operator with Standard Handwheel & Locking Device
-MJ-	Gear Operator with Oversize Handwheel
-MK-	Gear Operator with Oversize Handwheel & Locking Device
-TC-	With Test Certificate
-TD-	Tested to API Spec 6D
-UA-	AIS (American Iron & Steel) Compliant
-UL-	UL & CSA Listed (with Markings)
-ZP1-	Fugitive Emissions Packing (Viton)
-ZP2-	Fugitive Emissions Packing (Buna-N)
-ZP3-	Fugitive Emissions Packing (Kalrez)

Pressure/Temperature Ratings - Page M-9, Graph No. 1

DIMENSIONS

PART NO.	SIZE	A	B	C	D	E	F	G	H	I	J	K	L	M
88A-10G-01	10"	8.00	21.00	10.37	12.83	9.18	1.00	10.22	4.596	2.298	2.000	1.375	3/4-10	10.00

REV. 18JUL19

aalberts integrated piping systems

88A-200 SERIES

CARBON STEEL ASME CLASS 150 FLANGED FULL PORT BALL VALVE
1/2" THRU 1"

5 YEAR WARRANTY MADE IN USA

FOR STANDARDS COMPLIANCE AND STANDARD FEATURES REFER TO PAGE D-3.

STANDARD MATERIAL LIST

	PART	MATERIAL
1	Body	ASTM A216 WCB
2	Retainer	ASTM A108 Type 1215
3	Ball	ASTM A108 Type 1215 Chrome Plated
4	Stem	ASTM A108 Type 1215
5	Packing Gland	ASTM A108 Type 1215
6	Stem Seals	PTFE
7	Seats	TFM 1700
8	Gland Screws	ASTM A193 B7
9	Gland Plate	302 or 304 Stainless Steel
10	Stem Nut	316 Stainless Steel
11	Lever	ASTM A366 Steel with Vinyl Grip
12	Stem Bearing	RPTFE
13	Stop	ASTM A108 Type 1215
14	Stop Screw	SAE J429 Grade 2
15	Lock Plate	ASTM A366 Steel
16	Body Seal	RPTFE
17	Lockwasher	302 or 304 Stainless Steel
18	Grounding Spring	Stainless Steel

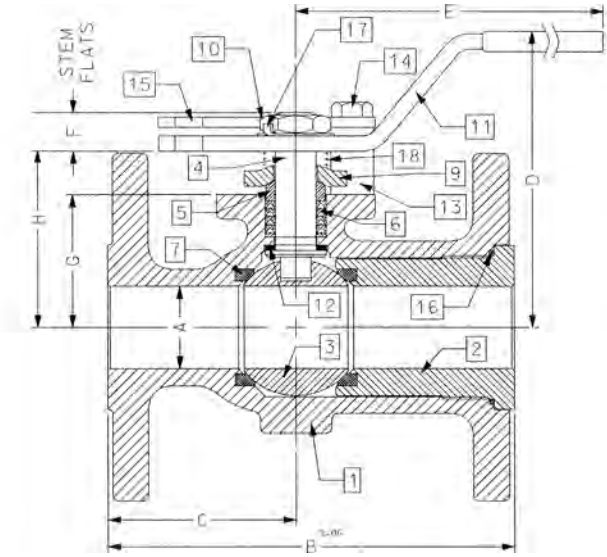

VARIATIONS AVAILABLE

- 88A-240 Series (316 Stainless Steel Ball & Stem)
- 88A-230 Series (Ni-Cu Ball & Stem)

OPTIONS AVAILABLE

(MORE INFORMATION IN SECTION J)

- Minimum quantities apply.
- To specify an option, replace the "01" standard suffix with the suffix of the option.
- To specify multiple options, replace the "01" suffix with the desired suffixes in the numerical order shown below. NOTE: Not all suffixes can be combined together.

(SUFFIX)	OPTION
-01	Standard Configuration
-04-	2-1/4" Stem Extension (Carbon Steel, Zinc Plated)
-10-	Stainless Steel Lever and Nut
-14-	Side Vented Ball (Uni-Directional). Not Available with Plated CS Ball
-15-	Wheel Handle, Steel
-21-	UHMWPE Seats
-24-	Graphite Packing, Spiral Wound Graphite Body Seal, RPTFE Bearing (API 607, 5th Edition, ISO 10497-5:2004)
-26-	Chlorine Service. Vented. Special Cleaning. Assembled Dry. (for CS, Hastelloy and Ni-Cu Valves. Ball Must be Hastelloy or Ni-CU)
-35-	PTFE Seats and Seals
-38-	PEEK Seats and Graphite Packing
-49-	No Lubrication. Assembled Dry
-65-	MPTFE Seats and Graphite Packing (Fire Safe)
-67-	Cleaned for Industrial Gases
-69-	Drilled and Tapped Purge Port with Plug
-70-	4" Extended Bonnet
-73-	316 Stainless Steel Spiral Wound Gaskets with PTFE Filler
-76-	Live Loaded (Lever)
-77-	Live Loaded (Gear, Actuator)
-80-	TFM 1600 Seats, PTFE Chevron Packing, Spiral Wound PTFE Body Seal, PEEK Bearing
-82-	Flat Face Flanges
-90-	Double Packed 4" Extended Bonnet
-9P-	Double Packed 4" Extended Bonnet with Monitoring Port
-CE-	CE Marking. See Page D-3 "Product Approvals" for Availability
-EF-	Graphite Packing (API 641 Compliant) (Not Available on 1/2" Size)
-EP-	Garlock EVSP Stem Packing with Spiral Wound Graphite Gasket (Fire Safe by Design)
-KF-	PCTFE Stem Bearing
-TC-	With Test Certificate
-TD-	Tested to API Spec 6D
-UA-	AIS (American Iron & Steel) Compliant
-UL-	UL & CSA Listed (with Markings)
-ZP1-	Fugitive Emissions Packing (Viton)
-ZP2-	Fugitive Emissions Packing (Buna-N)
-ZP3-	Fugitive Emissions Packing (Kalrez)

Pressure/Temperature Ratings - Page M-9, Graph No. 1

ACTUATOR MOUNTING

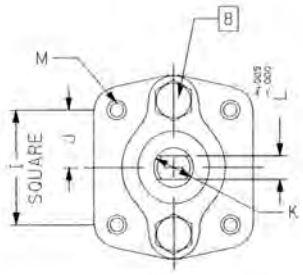

DIMENSIONS

PART NO.	SIZE	A	B	C	D	E	F	G	H	I	J	K	L	M	WT.
88A-203-01A	1/2"	0.50	4.25	2.06	2.74	5.12	0.24	1.09	1.44	1.002	0.501	0.375	0.245	10-24	5
88A-204-01A	3/4"	0.75	4.62	2.18	3.43	5.54	0.22	1.65	2.13	1.392	0.696	0.500	0.312	1/4-20	6
88A-205-01	1"	1.00	5.00	2.32	4.62	6.53	0.47	1.62	2.15	1.392	0.696	0.500	0.287	1/4-20	7

REV. 10SEP19

88A-200 SERIES

CARBON STEEL ASME CLASS 150 FLANGED FULL PORT BALL VALVE
1-1/2" THRU 2-1/2"

5 YEAR WARRANTY MADE IN USA

FOR STANDARDS COMPLIANCE AND STANDARD FEATURES REFER TO PAGE D-3.

STANDARD MATERIAL LIST

	PART	MATERIAL
1	Body	ASTM A216 WCB
2	Retainer	ASTM A216 WCB
3	Ball	ASTM A108 Type 1215 or ASTM A216 WCB Chrome Plated
4	Stem	ASTM A108 Type 1215
5	Packing Gland	ASTM A108 Type 1215
6	Stem Seals	PTFE
7	Seats	TFM 1700
8	Gland Screws	ASTM A193 B7
9	Gland Plate	302 & 304 Stainless Steel
10	Stem Nut	ASTM A194 Grade 8I
11	Lever	ASTM A366 Steel with Vinyl Grip
12	Stem Bearing	RPTFE
13	Stop	ASTM A108 Type 1215
14	Stop Screw	SAE J429 Grade 2
15	Lock Plate	ASTM A366 Steel
16	Body Seal	RPTFE
17	Grounding Spring	Stainless Steel
18	Body Joint Stud	ASTM A193 Grade B7
19	Body Joint Nut	ASTM A194 Grade 2H
20	Lockwasher	302 or 304 Stainless Steel

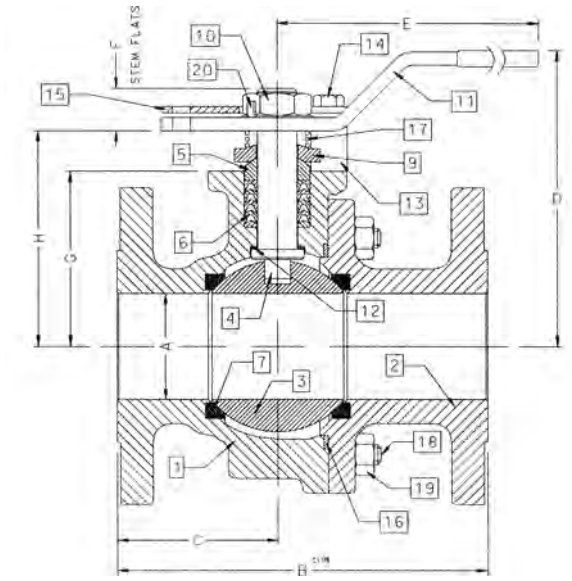

ACTUATOR MOUNTING

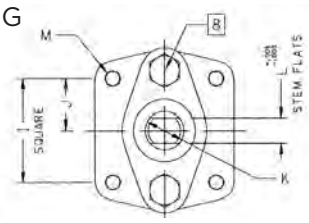

VARIATIONS AVAILABLE

- 88A-240 Series (316 Stainless Steel Ball & Stem)
- 88A-230 Series (Ni-Cu Ball & Stem)

OPTIONS AVAILABLE

(MORE INFORMATION IN SECTION J)

- Minimum quantities apply.
- To specify an option, replace the "01" standard suffix with the suffix of the option.
- To specify multiple options, replace the "01" suffix with the desired suffixes in the numerical order shown below. NOTE: Not all suffixes can be combined together.

(SUFFIX)	OPTION
-01	Standard Configuration
-04-	2-1/4" Stem Extension (Carbon Steel, Zinc Plated)
-10-	Stainless Steel Lever and Nut
-14-	Side Vented Ball (Uni-Directional). Not Available with Plated CS Ball
-15-	Wheel Handle, Steel
-21-	UHMWPE Seats
-24-	Fire Safe - Graphite Packing & Seals (API 607, 5th edition, ISO 10497-5:2004) 1-1/2" & 2" (API 607, 6th edition, ISO 10497:2010) 2-1/2"
-26-	Chlorine Service. Vented. Special Cleaning. Assembled Dry. (for CS, Hastelloy and Ni-Cu Valves. Ball Must be Hastelloy or Ni-CU)
-35-	PTFE Seats and Seals
-38-	PEEK Seats and Graphite Packing
-49-	No Lubrication. Assembled Dry
-59-	Stainless Steel External Trim
-65-	MPTFE Seats and Graphite Packing (Fire Safe)
-67-	Cleaned for Industrial Gases
-69-	Drilled and Tapped Purge Ports with Plugs
-70-	4" Extended Bonnet
-73-	316 Stainless Steel Spiral Wound Gaskets with PTFE Filler
-76-	Live Loaded (Lever)
-77-	Live Loaded (Gear, Actuator)
-80-	TFM 1600 Seats, PTFE Chevron Packing, Spiral Wound PTFE Body Seal, PEEK Bearing
-82-	Flat Face Flanges
-90-	Double Packed 4" Extended Bonnet
-9P-	Double Packed 4" Extended Bonnet with Monitoring Port
-CE-	CE Marking. See Page D-3 "Product Approvals" for Availability
-EF-	Graphite Packing (API 641 Compliant)
-EP-	Garlock EVSP Stem Packing with Spiral Wound Graphite Gasket (Fire Safe by Design)
-KF-	PCTFE Stem Bearing
-MG-	Gear Operator with Standard Handwheel
-MH-	Gear Operator with Standard Handwheel & Locking Device
-MJ-	Gear Operator with Oversize Handwheel
-MK-	Gear Operator with Oversize Handwheel & Locking Device
-TC-	With Test Certificate
-TD-	Tested to API Spec 6D
-UA-	AIS (American Iron & Steel) Compliant
-UL-	UL & CSA Listed (with Markings)
-ZP1-	Fugitive Emissions Packing (Viton)
-ZP2-	Fugitive Emissions Packing (Buna-N)
-ZP3-	Fugitive Emissions Packing (Kalrez)

Pressure/Temperature Ratings - Page M-9, Graph No. 1

DIMENSIONS

PART NO.	SIZE	A	B	C	D	E	F	G	H	I	J	K	L	M	WT.
88A-207-01	1-1/2"	1.50	6.50	3.00	4.62	6.65	0.72	2.41	3.09	1.949	0.974	0.625	0.412	5/16-18	14
88A-208-01	2"	2.00	7.00	3.04	5.61	8.41	0.80	3.31	4.08	1.949	0.974	0.750	0.477	5/16-18	25
88A-209-01	2-1/2"	2.50	7.50	3.34	6.24	8.41	0.80	3.94	4.71	1.949	0.974	0.750	0.477	5/16-18	30

REV. 18JUL19

aalberts integrated piping systems

88A-200 SERIES

CARBON STEEL ASME CLASS 150 FLANGED FULL PORT BALL VALVE
3" THRU 6"

5 YEAR WARRANTY MADE IN USA

FOR STANDARDS COMPLIANCE AND STANDARD FEATURES REFER TO PAGE D-3.

STANDARD MATERIAL LIST

	PART	MATERIAL
1	Body	ASTM A216 WCB
2	Retainer	ASTM A216 WCB
3	Ball	ASTM A108 Type 1215 or A216 WCB Chrome Plated
4	Stem	ASTM A108 Type 1215
5	Packing Gland	ASTM A108 Type 1215
6	Stem Seals	PTFE
7	Seats	TFM 1700
8	Gland Screws	ASTM A193 B7
9	Gland Plate	316 Stainless Steel
10	Adapter Screw	316 Stainless Steel
11	Handle Adapter	ASTM A366 Steel with Vinyl Grip
12	Stem Bearing	RPTFE
13	Stop	ASTM A108 Type 1215
14	Stop Screw	SAE J429 Grade 2
15	Lock Plate	ASTM A366 Steel
16	Body Seal	RPTFE
17	Grounding Spring	Stainless Steel
18	Body Joint Stud	ASTM A193 Grade B7
19	Body Joint Nut	ASTM A194 Grade 2H
20	Pipe Handle	Galvanized Steel (not shown)

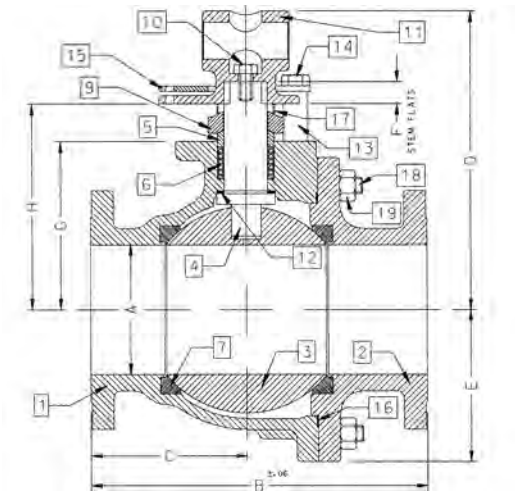

ACTUATOR MOUNTING

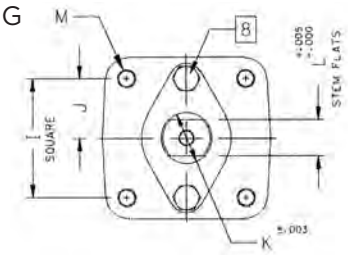

VARIATIONS AVAILABLE

- 88A-240 Series (316 Stainless Steel Ball & Stem)
- 88A-230 Series (Ni-Cu Ball & Stem)

OPTIONS AVAILABLE

(MORE INFORMATION IN SECTION J)

- Minimum quantities apply.
- To specify an option, replace the "01" standard suffix with the suffix of the option.
- To specify multiple options, replace the "01" suffix with the desired suffixes in the numerical order shown below. NOTE: Not all suffixes can be combined together.

(SUFFIX)	OPTION
-01	Standard Configuration
-14-	Side Vented Ball (Uni-Directional). Not Available with Plated CS Ball
-21-	UHMWPE Seats
-24-	Graphite Packing, Spiral Wound Graphite Body Seal, RPTFE Bearing (API 607, 6th Edition, ISO 10497:2010)
-26-	Chlorine Service. Vented. Special Cleaning. Assembled Dry. (for CS, Hastelloy and Ni-Cu Valves. Ball Must be Hastelloy or Ni-CU)
-35-	PTFE Seats and Seals
-38-	PEEK Seats and Graphite Packing
-49-	No Lubrication. Assembled Dry
-59-	Stainless Steel External Trim
-65-	MPTFE Seats and Graphite Packing (Fire Safe)
-67-	Cleaned for Industrial Gases
-69-	Drilled and Tapped Purge Port with Plug
-70-	4" Extended Bonnet
-73-	316 Stainless Steel Spiral Wound Gaskets with PTFE Filler
-76-	Live Loaded (Lever)
-77-	Live Loaded (Gear, Actuator)
-80-	TFM 1600 Seats, PTFE Chevron Packing, Spiral Wound PTFE Body Seal, PEEK Bearing
-82-	Flat Face Flanges
-90-	Double Packed 4" Extended Bonnet
-9P-	Double Packed 4" Extended Bonnet with Monitoring Port
-CE-	CE Marking. See Page D-3 "Product Approvals" for Availability
-EF-	Graphite Packing (API 641 Compliant)
-EP-	Garlock EVSP Stem Packing with Spiral Wound Graphite Gasket (Fire Safe by Design)
-KF-	PCTFE Stem Bearing
-MG-	Gear Operator with Standard Handwheel
-MH-	Gear Operator with Standard Handwheel & Locking Device
-MJ-	Gear Operator with Oversize Handwheel
-MK-	Gear Operator with Oversize Handwheel & Locking Device
-TC-	With Test Certificate
-TD-	Tested to API Spec 6D
-UA-	AIS (American Iron & Steel) Compliant
-UL-	UL & CSA Listed (with Markings)
-ZP1-	Fugitive Emissions Packing (Viton)
-ZP2-	Fugitive Emissions Packing (Buna-N)
-ZP3-	Fugitive Emissions Packing (Kalrez)

Pressure/Temperature Ratings - Page M-9, Graph No. 1

DIMENSIONS

PART NO.	SIZE	A	B	C	D	E	F	G	H	I	J	K	L	M	WT.
88A-200-01	3"	3.00	8.00	3.68	8.80	3.88	0.50	4.75	5.95	2.840	1.420	1.250	0.725	3/8-16	60
88A-20A-01	4"	4.00	9.00	3.94	9.99	5.13	0.50	5.94	7.13	2.840	1.420	1.250	0.725	3/8-16	91
88A-20C-01	6"	6.00	15.50	7.19	13.73	7.00	1.00	7.75	9.48	4.596	2.298	2.000	1.375	3/4-10	248

REV. 18JUL19

88A-200 SERIES

CARBON STEEL ASME CLASS 150 FLANGED FULL PORT BALL VALVE
8" THRU 12"

5 YEAR WARRANTY MADE IN USA

FOR STANDARDS COMPLIANCE AND STANDARD FEATURES REFER TO PAGE D-3.

STANDARD MATERIAL LIST

	PART	MATERIAL
1	Body	ASTM A216 WCB
2	Retainer	ASTM A216 WCB
3	Ball	ASTM A108 Type 1215 or A216 WCB Chrome Plated
4	Stem	ASTM A108 Type 1215
5	Packing Gland	ASTM A108 Type 1215
6	Stem Seals	PTFE
7	Seats	TFM 1700
8	Gland Screws	ASTM A193 B7
9	Gland Plate	316 Stainless Steel
10	Stem Bearing	RPTFE
11	Body Seal	RPTFE
12	Body Joint Stud	ASTM A193 Grade B7
13	Body Joint Nut	ASTM A194 Grade 2H

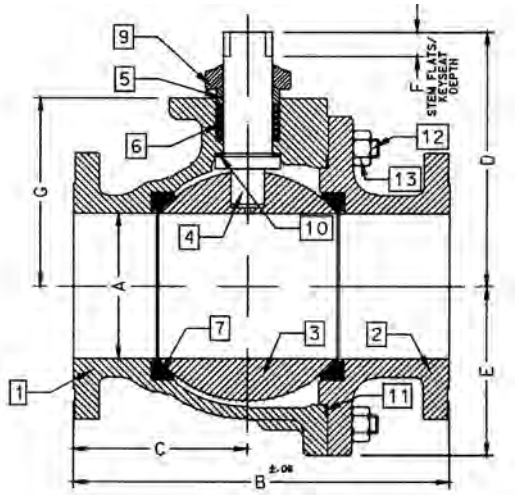

ACTUATOR MOUNTING

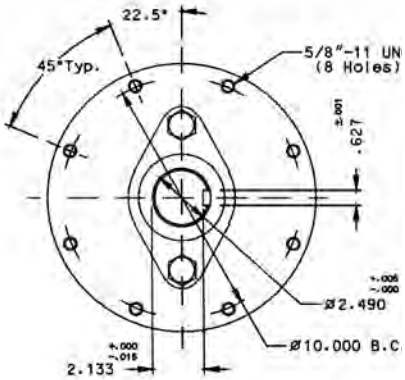

10" & 12"

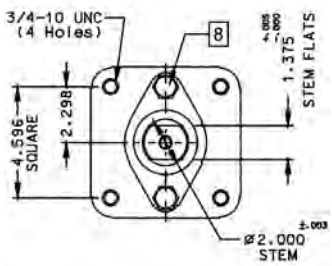

8"

VARIATIONS AVAILABLE

- 88A-230 Series (Ni-Cu Ball & Stem)
- 88A-240 Series (316 Stainless Steel Ball & Stem)

OPTIONS AVAILABLE

(MORE INFORMATION IN SECTION J)

- Minimum quantities apply.
- To specify an option, replace the "01" standard suffix with the suffix of the option.
- To specify multiple options, replace the "01" suffix with the desired suffixes in the numerical order shown below. NOTE: Not all suffixes can be combined together

(SUFFIX)	OPTION
-01	Standard Configuration
-14-	Side Vented Ball (Uni-Directional). Not Available with Plated CS Ball
-21-	UHMWPE Seats
-24-	Graphite Packing, Spiral Wound Graphite Body Seal, RPTFE Bearing (API 607, 6th Edition, ISO 10497:2010)
-26-	Chlorine Service. Vented. Special Cleaning. Assembled Dry. (for CS, Hastelloy and Ni-Cu Valves. Ball Must be Hastelloy or Ni-CU)
-35-	PTFE Seats and Seals
-49-	No Lubrication. Assembled Dry
-65-	MPTFE Seats and Graphite Packing (Fire Safe)
-67-	Cleaned for Industrial Gas - CS Valves
-69-	Drilled and Tapped Purge Ports with Plugs
-70-	4" Extended Bonnet (8" Only)
-77-	Live Loaded (Gear, Actuator)
-80-	TFM 1600 Seats, PTFE Chevron Packing, Spiral Wound PTFE Body Seal, PEEK Bearing
-82-	Flat Face Flanges
-90-	Double Packed 4" Extended Bonnet
-9P-	Double Packed 4" Extended Bonnet with Monitoring Port
-CE-	CE Marking. See Page D-3 "Product Approvals" for Availability
-EF-	Graphite Packing (API 641 Compliant)
-EP-	Garlock EVSP Stem Packing with Spiral Wound Graphite Gasket (Fire Safe by Design)
-KF-	PCTFE Stem Bearing
-MG-	Gear Operator with Standard Handwheel
-MH-	Gear Operator with Standard Handwheel & Locking Device
-MJ-	Gear Operator with Oversize Handwheel
-MK-	Gear Operator with Oversize Handwheel & Locking Device
-TC-	With Test Certificate
-TD-	Tested to API Spec 6D
-UA-	AIS (American Iron & Steel) Compliant
-UL-	UL & CSA Listed (with Markings)
-ZP1-	Fugitive Emissions Packing (Viton)
-ZP2-	Fugitive Emissions Packing (Buna-N)
-ZP3-	Fugitive Emissions Packing (Kalrez)

Pressure/Temperature Ratings - Page M-9, Graph No. 1

DIMENSIONS

PART NO.	SIZE	A	B	C	D	E	F	G
88A-20E-01	8"	8.00	18.00	8.88	12.83	9.18	1.00	10.22
88A-20G-01	10"	10.00	21.00	10.26	18.57	11.33	2.31	12.80
88A-20H-01	12"	12.00	24.00	12.09	20.31	13.40	2.31	14.92

REV. 18JUL19

aalberts integrated piping systems

88A-700 SERIES

CARBON STEEL ASME CLASS 300 FLANGED STD. PORT BALL VALVE
1-1/2" THRU 2"

5 YEAR WARRANTY MADE IN USA

FOR STANDARDS COMPLIANCE AND STANDARD FEATURES REFER TO PAGE D-3.

STANDARD MATERIAL LIST

	PART	MATERIAL
1	Body	ASTM A216 WCB
2	Retainer	ASTM A108 Type 1215
3	Ball	ASTM A108, Carbon Steel, Chrome Plated or ASTM A276, Type 316 Stainless Steel
4	Stem	ASTM A108 Type 1215
5	Packing Gland	ASTM A108 Type 1215
6	Stem Seals	PTFE
7	Seats	TFM 1700
8	Gland Screws	ASTM A193 B7
9	Gland Plate	302 & 304 Stainless Steel
10	Stem Nut	316 Stainless Steel
11	Lever	ASTM A366 Steel with Vinyl Grip
12	Stem Bearing	RPTFE
13	Stop	ASTM A108 Type 1215
14	Stop Screw	SAE J429 Grade 2
15	Lock Plate	ASTM A366 Steel
16	Body Seal	RPTFE
17	Lockwasher	302 or 304 Stainless Steel
18	Grounding Spring	Stainless Steel

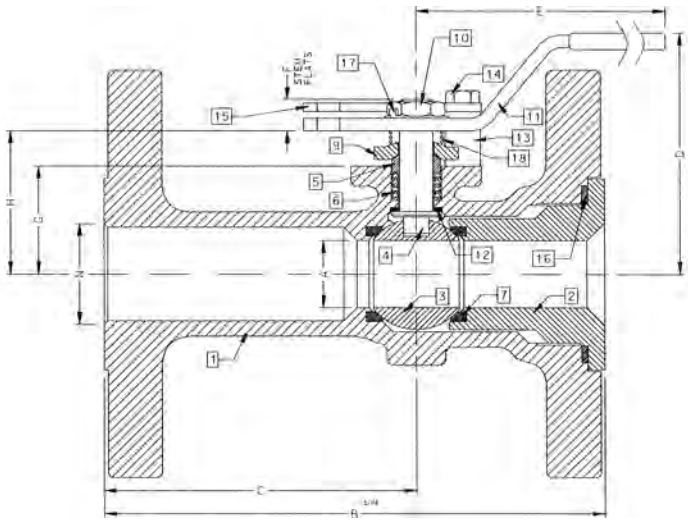

ACTUATOR MOUNTING

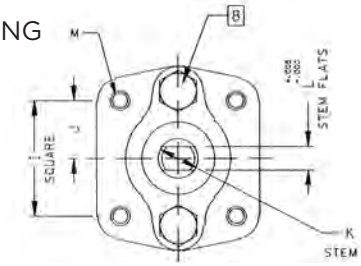

VARIATIONS AVAILABLE

- 88A-740 Series (316 Stainless Steel Ball & Stem)
- 88A-730 Series (Ni-Cu Ball & Stem)

OPTIONS AVAILABLE

(MORE INFORMATION IN SECTION J)

- Minimum quantities apply.
- To specify an option, replace the "01" standard suffix with the suffix of the option.
- To specify multiple options, replace the "01" suffix with the desired suffixes in the numerical order shown below. NOTE: Not all suffixes can be combined together.

(SUFFIX)	OPTION
-01	Standard Configuration
-04-	2-1/4" Stem Extension (Carbon Steel, Zinc Plated)
-10-	Stainless Steel Lever and Nut
-14-	Side Vented Ball (Uni-Directional). Not Available with Plated CS Ball
-15-	Wheel Handle, Steel
-21-	UHMWPE Seats
-24-	Graphite Packing, Spiral Wound Graphite Body Seal, RPTFE Bearing (API 607, 5th Edition, ISO 10497-5:2004)
-26-	Chlorine Service. Vented. Special Cleaning. Assembled Dry. (for CS, Hastelloy and Ni-Cu Valves. Ball Must be Hastelloy or Ni-CU)
-35-	PTFE Seats and Seals
-38-	PEEK Seats and Graphite Packing
-49-	No Lubrication. Assembled Dry
-65-	MPTFE Seats and Graphite Packing (Fire Safe)
-67-	Cleaned for Industrial Gases
-69-	Drilled and Tapped Purge Ports with Plugs
-70-	4" Extended Bonnet
-73-	316 Stainless Steel Spiral Wound Gaskets with PTFE Filler
-76-	Live Loaded (Lever)
-77-	Live Loaded (Gear, Actuator)
-80-	TFM 1600 Seats, PTFE Chevron Packing, Spiral Wound PTFE Body Seal, PEEK Bearing
-82-	Flat Face Flanges
-90-	Double Packed 4" Extended Bonnet
-9P-	Double Packed 4" Extended Bonnet with Monitoring Port
-CE-	CE Marking. See Page D-3 "Product Approvals" for Availability
-EF-	Graphite Packing (API 641 Compliant)
-EP-	Garlock EVSP Stem Packing with Spiral Wound Graphite Gasket (Fire Safe by Design)
-KF-	PCTFE Stem Bearing
-TC-	With Test Certificate
-TD-	Tested to API Spec 6D
-UA-	AIS (American Iron & Steel) Compliant
-UL-	UL & CSA Listed (with Markings)
-ZP1-	Fugitive Emissions Packing (Viton)
-ZP2-	Fugitive Emissions Packing (Buna-N)
-ZP3-	Fugitive Emissions Packing (Kalrez)

Pressure/Temperature Ratings - Page M-11, Graph No. 5

DIMENSIONS

PART NO.	SIZE	A	B	C	D	E	F	G	H	I	J	K	L	M	N	WT.
88A-707-01	1-1/2"	1.25	7.50	4.50	4.85	6.53	0.47	1.85	2.38	1.392	0.696	0.500	0.287	1/4-20	1.50	16
88A-708-01	2"	1.50	8.50	5.19	4.62	6.65	0.72	2.41	3.09	1.949	0.974	0.625	0.412	5/16-18	2.00	24

REV. 18JUL19

88A-700 SERIES

CARBON STEEL ASME CLASS 300 FLANGED STD. PORT BALL VALVE
2-1/2" THRU 3"

5 YEAR WARRANTY MADE IN USA

FOR STANDARDS COMPLIANCE AND STANDARD FEATURES REFER TO PAGE D-3.

STANDARD MATERIAL LIST

	PART	MATERIAL
1	Body	ASTM A216 WCB
2	Retainer	ASTM A216 WCB
3	Ball	ASTM A108 Type 1215 or A216 WCB Chrome Plated
4	Stem	ASTM A108 Type 1215
5	Packing Gland	ASTM A108 Type 1215
6	Stem Seals	PTFE
7	Seats	TFM 1700
8	Gland Screws	ASTM A193 B7
9	Gland Plate	302 or 304 Stainless Steel
10	Stem Nut	ASTM A194 Grade 8
11	Lever	ASTM A366 Steel with Vinyl Grip
12	Stem Bearing	RPTFE
13	Stop	ASTM A108 Type 1215
14	Stop Screw	SAE J429 Grade 2
15	Lock Plate	ASTM A366 Steel
16	Body Seal	RPTFE
17	Grounding Spring	Stainless Steel
18	Body Joint Stud	ASTM A193 Grade B7
19	Body Joint Nut	ASTM A194 Grade 2H
20	Lockwasher	302 or 304 Stainless Steel

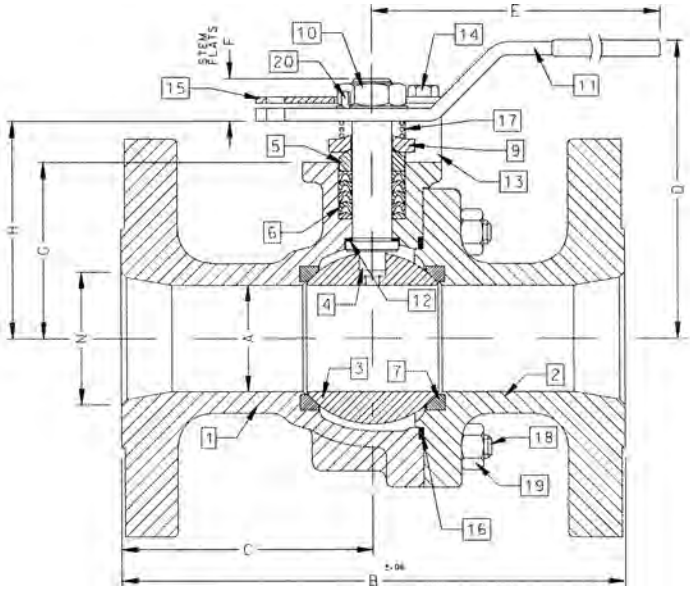

ACTUATOR MOUNTING

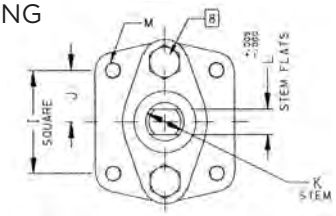

VARIATIONS AVAILABLE

- 88A-740 Series (316 Stainless Steel Ball & Stem)
- 88A-730 Series (Ni-Cu Ball & Stem)

OPTIONS AVAILABLE

(MORE INFORMATION IN SECTION J)

- Minimum quantities apply.
- To specify an option, replace the "01" standard suffix with the suffix of the option.
- To specify multiple options, replace the "01" suffix with the desired suffixes in the numerical order shown below. NOTE: Not all suffixes can be combined together.

(SUFFIX)	OPTION
-01	Standard Configuration
-04-	2-1/4" Stem Extension (Carbon Steel, Zinc Plated)
-10-	Stainless Steel Lever and Nut
-14-	Side Vented Ball (Uni-Directional). Not Available with Plated CS Ball
-15-	Wheel Handle, Steel
-21-	UHMWPE Seats
-24-	Graphite Packing, Spiral Wound Graphite Body Seal, RPTFE Bearing (API 607, 6th Edition, ISO 10497:2010)
-26-	Chlorine Service. Vented. Special Cleaning. Assembled Dry. (for CS, Hastelloy and Ni-Cu Valves. Ball Must be Hastelloy or Ni-CU)
-35-	PTFE Seats and Seals
-38-	PEEK Seats and Graphite Packing
-49-	No Lubrication. Assembled Dry
-59-	Stainless Steel External Trim
-65-	MPTFE Seats and Graphite Packing (Fire Safe)
-67-	Cleaned for Industrial Gases
-69-	Drilled and Tapped Purge Port with Plug
-70-	4" Extended Bonnet
-73-	316 Stainless Steel Spiral Wound Gaskets with PTFE Filler
-76-	Live Loaded (Lever)
-77-	Live Loaded (Gear, Actuator)
-80-	TFM 1600 Seats, PTFE Chevron Packing, Spiral Wound PTFE Body Seal, PEEK Bearing
-82-	Flat Face Flanges
-90-	Double Packed 4" Extended Bonnet
-9P-	Double Packed 4" Extended Bonnet with Monitoring Port
-CE-	CE Marking. See Page D-3 "Product Approvals" for Availability
-EF-	Graphite Packing (API 641 Compliant)
-EP-	Garlock EVSP Stem Packing with Spiral Wound Graphite Gasket (Fire Safe by Design)
-KF-	PCTFE Stem Bearing
-MG-	Gear Operator with Standard Handwheel
-MH-	Gear Operator with Standard Handwheel & Locking Device
-MJ-	Gear Operator with Oversize Handwheel
-MK-	Gear Operator with Oversize Handwheel & Locking Device
-TC-	With Test Certificate
-TD-	Tested to API Spec 6D
-UA-	AIS (American Iron & Steel) Compliant
-UL-	UL & CSA Listed (with Markings)
-ZP1-	Fugitive Emissions Packing (Viton)
-ZP2-	Fugitive Emissions Packing (Buna-N)
-ZP3-	Fugitive Emissions Packing (Kalrez)

Pressure/Temperature Ratings - Page M-11, Graph No. 5

DIMENSIONS

PART NO.	SIZE	A	B	C	D	E	F	G	H	I	J	K	L	M	N	WT.
88A-709-01	2-1/2"	2.00	9.50	4.75	5.61	8.41	0.80	3.31	4.08	1.949	0.974	0.750	0.477	5/16-18	2.50	39
88A-700-01	3"	2.50	11.12	5.56	6.24	8.41	0.80	3.94	4.71	1.949	0.974	0.750	0.477	5/16-18	3.00	55

REV. 18JUL19

aalberts integrated piping systems

88A-700 SERIES

CARBON STEEL ASME CLASS 300 FLANGED STD. PORT BALL VALVE
4" THRU 8"

5 YEAR WARRANTY MADE IN USA

FOR STANDARDS COMPLIANCE AND STANDARD FEATURES REFER TO PAGE D-3.

STANDARD MATERIAL LIST

	PART	MATERIAL
1	Body	ASTM A216 WCB
2	Retainer	ASTM A216 WCB
3	Ball	ASTM A108 Type 1215 or A216 WCB Chrome Plated
4	Stem	ASTM A108 Type 1215
5	Packing Gland	ASTM A108 Type 1215
6	Stem Seals	PTFE
7	Seats	TFM 1700
8	Gland Screws	ASTM A193 B7
9	Gland Plate	316 Stainless Steel
10	Adapter Screw	316 Stainless Steel
11	Handle Adapter	ASTM A366 Steel with Vinyl Grip
12	Stem Bearing	RPTFE
13	Stop	ASTM A108 Type 1215
14	Stop Screw	SAE J429 Grade 2
15	Lock Plate	ASTM A366 Steel
16	Body Seal	RPTFE
17	Grounding Spring	Stainless Steel
18	Body Joint Stud	ASTM A193 Grade B7
19	Body Joint Nut	ASTM A194 Grade 2H
20	Adapter Screw	316 Stainless Steel
21	Pipe Handle	Galvanized Steel (not shown)

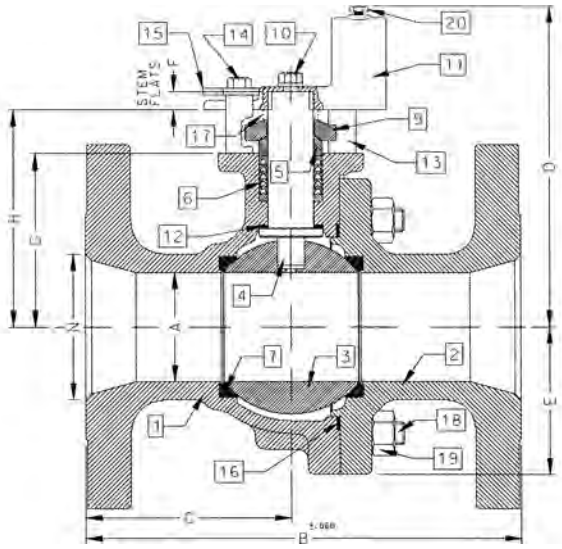

ACTUATOR MOUNTING

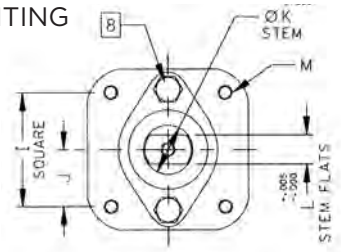

VARIATIONS AVAILABLE

- 88A-740 Series (316 Stainless Steel Ball & Stem)
- 88A-730 Series (Ni-Cu Ball & Stem)

OPTIONS AVAILABLE

(MORE INFORMATION IN SECTION J)

- Minimum quantities apply.
- To specify an option, replace the "01" standard suffix with the suffix of the option.
- To specify multiple options, replace the "01" suffix with the desired suffixes in the numerical order shown below. NOTE: Not all suffixes can be combined together.

(SUFFIX)	OPTION
-01	Standard Configuration
-14-	Side Vented Ball (Uni-Directional). Not Available with Plated CS Ball
-21-	UHMWPE Seats
-24-	Fire Safe - Graphite Packing & Seals (API 607, 5th edition, ISO 10497-5:2004) 4" & 6" (API 607, 6th edition, ISO 10497:2010) 8"
-26-	Chlorine Service. Vented. Special Cleaning. Assembled Dry. (for CS, Hastelloy and Ni-Cu Valves. Ball Must be Hastelloy or Ni-CU)
-35-	PTFE Seats and Seals
-49-	No Lubrication. Assembled Dry
-59-	Stainless Steel External Trim
-65-	MPTFE Seats and Graphite Packing (Fire Safe)
-67-	Cleaned for Industrial Gases
-69-	Drilled and Tapped Purge Ports with Plugs
-70-	4" Extended Bonnet
-73-	316 Stainless Steel Spiral Wound Gaskets with PTFE Filler
-76-	Live Loaded (Lever)
-77-	Live Loaded (Gear, Actuator)
-80-	TFM 1600 Seats, PTFE Chevron Packing, Spiral Wound PTFE Body Seal, PEEK Bearing
-82-	Flat Face Flanges
-90-	Double Packed 4" Extended Bonnet
-9P-	Double Packed 4" Extended Bonnet with Monitoring Port
-CE-	CE Marking. See Page D-3 "Product Approvals" for Availability
-EF-	Graphite Packing (API 641 Compliant)
-EP-	Garlock EVSP Stem Packing with Spiral Wound Graphite Gasket (Fire Safe by Design)
-KF-	PCTFE Stem Bearing
-MG-	Gear Operator with Standard Handwheel
-MH-	Gear Operator with Standard Handwheel & Locking Device
-MJ-	Gear Operator with Oversize Handwheel
-MK-	Gear Operator with Oversize Handwheel & Locking Device
-TC-	With Test Certificate
-TD-	Tested to API Spec 6D
-UA-	AIS (American Iron & Steel) Compliant
-UL-	UL & CSA Listed (with Markings)
-ZP1-	Fugitive Emissions Packing (Viton)
-ZP2-	Fugitive Emissions Packing (Buna-N)
-ZP3-	Fugitive Emissions Packing (Kalrez)

Pressure/Temperature Ratings - Page M-11, Graph No. 5

DIMENSIONS

PART NO.	SIZE	A	B	C	D	E	F	G	H	I	J	K	L	M	N	WT.
88A-70A-01	4"	3.00	12.00	5.68	8.80	4.06	0.50	4.75	5.95	2.840	1.420	1.250	0.725	3/8-16	4.00	95
88A-70C-01	6"	4.00	15.88	7.38	9.99	5.25	0.50	5.94	7.13	2.840	1.420	1.250	0.725	3/8-16	6.00	187
88A-70E-01	8"	6.00	19.75	9.00	13.73	7.30	1.00	7.75	9.48	4.596	2.298	2.000	1.375	3/4-10	8.00	400

REV. 18JUL19

88A-700 SERIES

CARBON STEEL ASME CLASS 300 FLANGED STD. PORT BALL VALVE
10"

5 YEAR WARRANTY MADE IN USA

FOR STANDARDS COMPLIANCE AND STANDARD FEATURES REFER TO PAGE D-3.

STANDARD MATERIAL LIST

	PART	MATERIAL
1	Body	ASTM A216 WCB
2	Retainer	ASTM A216 WCB
3	Ball	ASTM A108 Type 1215 or A216 WCB Chrome Plated
4	Stem	ASTM A108 Type 1215
5	Packing Gland	ASTM A108 Type 1215
6	Stem Seals	PTFE
7	Seats	TFM 1700
8	Gland Screws	ASTM A193 B7
9	Gland Plate	316 Stainless Steel
10	Stem Bearing	RPTFE
11	Body Seal	RPTFE
12	Body Joint Stud	ASTM A193 Grade B7
13	Body Joint Nut	ASTM A194 Grade 2H

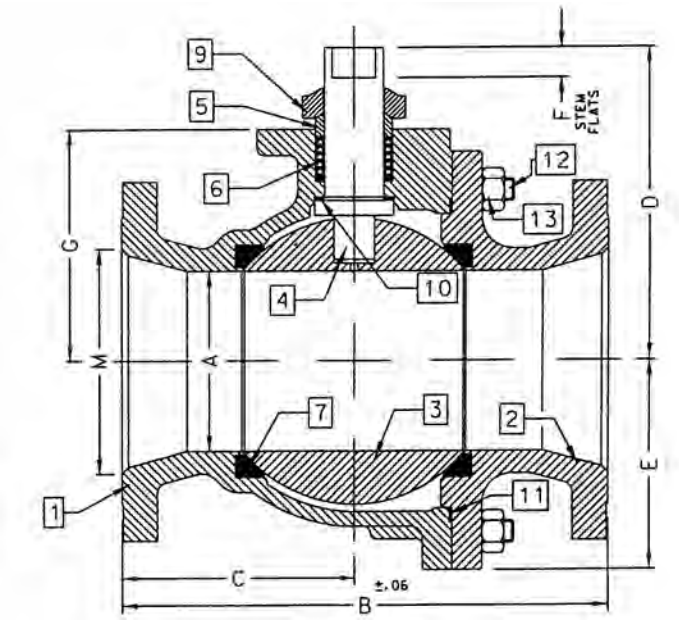

ACTUATOR MOUNTING

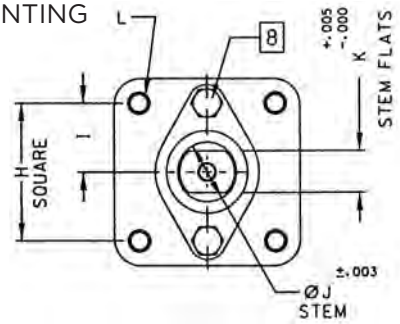

VARIATIONS AVAILABLE

- 88A-730 Series (Ni-Cu Ball & Stem)
- 88A-740 Series (316 Stainless Steel Ball & Stem)

OPTIONS AVAILABLE

(MORE INFORMATION IN SECTION J)

- Minimum quantities apply.
- To specify an option, replace the "01" standard suffix with the suffix of the option.
- To specify multiple options, replace the "01" suffix with the desired suffixes in the numerical order shown below. NOTE: Not all suffixes can be combined together.

(SUFFIX)	OPTION
-01	Standard Configuration
-14-	Side Vented Ball (Uni-Directional). Not Available with Plated CS Ball
-21-	UHMWPE Seats
-24-	Graphite Packing, Spiral Wound Graphite Body Seal, RPTFE Bearing (API 607, 5th Edition, ISO 10497-5:2004)
-26-	Chlorine Service. Vented. Special Cleaning. Assembled Dry. (for CS, Hastelloy and Ni-Cu Valves. Ball Must be Hastelloy or Ni-CU)
-35-	PTFE Seats and Seals
-49-	No Lubrication. Assembled Dry
-65-	MPTFE Seats and Graphite Packing (Fire Safe)
-67-	Cleaned for Industrial Gases
-69-	Drilled and Tapped Purge Port with Plugs
-70-	4" Extended Bonnet
-77-	Live Loaded (Gear, Actuator)
-80-	TFM 1600 Seats, PTFE Chevron Packing, Spiral Wound PTFE Body Seal, PEEK Bearing
-82-	Flat Face Flanges
-90-	Double Packed 4" Extended Bonnet
-9P-	Double Packed 4" Extended Bonnet with Monitoring Port
-CE-	CE Marking. See Page D-3 "Product Approvals" for Availability
-EF-	Graphite Packing (API 641 Compliant)
-EP-	Garlock EVSP Stem Packing with Spiral Wound Graphite Gasket (Fire Safe by Design)
-KF-	PCTFE Stem Bearing
-MG-	Gear Operator with Standard Handwheel
-MH-	Gear Operator with Standard Handwheel & Locking Device
-MJ-	Gear Operator with Oversize Handwheel
-MK-	Gear Operator with Oversize Handwheel & Locking Device
-TC-	With Test Certificate
-TD-	Tested to API Spec 6D
-UA-	AIS (American Iron & Steel) Compliant
-UL-	UL & CSA Listed (with Markings)
-ZP1-	Fugitive Emissions Packing (Viton)
-ZP2-	Fugitive Emissions Packing (Buna-N)
-ZP3-	Fugitive Emissions Packing (Kalrez)

Pressure/Temperature Ratings - Page M-11, Graph No. 5

DIMENSIONS

PART NO.	SIZE	A	B	C	D	E	F	G	H	I	J	K	L	M
88A-70G-01	10"	8.00	22.38	10.69	12.83	9.56	1.00	10.22	4.596	2.298	2.000	1.375	3/4-10	10.00

REV. 18JUL19

aalberts integrated piping systems

88A-900 SERIES

CARBON STEEL ASME CLASS 300 FLANGED FULL PORT BALL VALVE
1/2" THRU 1"

5 YEAR WARRANTY MADE IN USA

FOR STANDARDS COMPLIANCE AND STANDARD FEATURES REFER TO PAGE D-3.

STANDARD MATERIAL LIST

	PART	MATERIAL
1	Body	ASTM A216 WCB
2	Retainer	ASTM A108 Type 1215
3	Ball	ASTM A108 Type 1215 Chrome Plated
4	Stem	ASTM A108 Type 1215
5	Packing Gland	ASTM A108 Type 1215
6	Stem Seals	PTFE
7	Seats	TFM 1700
8	Gland Screws	ASTM A193 B7
9	Gland Plate	302 or 304 Stainless Steel
10	Stem Nut	316 Stainless Steel
11	Lever	ASTM A366 Steel with Vinyl Grip
12	Stem Bearing	RPTFE
13	Stop	ASTM A108 Type 1215
14	Stop Screw	SAE J429 Grade 2
15	Lock Plate	ASTM A366 Steel
16	Body Seal	RPTFE
17	Lockwasher	302 or 304 Stainless Steel
18	Grounding Spring	Stainless Steel

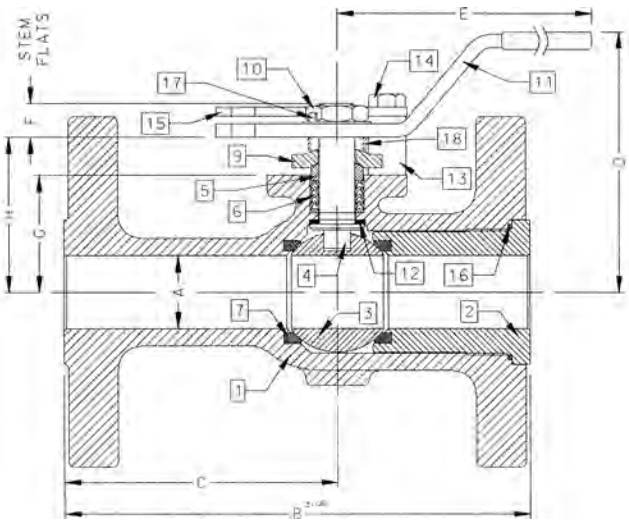

ACTUATOR MOUNTING

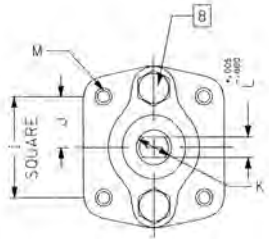

VARIATIONS AVAILABLE

- 88A-940 Series (316 Stainless Steel Ball & Stem)
- 88A-930 Series (Ni-Cu Ball & Stem)

OPTIONS AVAILABLE

(MORE INFORMATION IN SECTION J)

- Minimum quantities apply.
- To specify an option, replace the "01" standard suffix with the suffix of the option.
- To specify multiple options, replace the "01" suffix with the desired suffixes in the numerical order shown below. NOTE: Not all suffixes can be combined together.

(SUFFIX)	OPTION
-01	Standard Configuration
-04-	2-1/4" Stem Extension (Carbon Steel, Zinc Plated)
-10-	Stainless Steel Lever and Nut
-14-	Side Vented Ball (Uni-Directional). Not Available with Plated CS Ball
-15-	Wheel Handle, Steel
-21-	UHMWPE Seats
-24-	Graphite Packing, Spiral Wound Graphite Body Seal, RPTFE Bearing (API 607, 5th Edition, ISO 10497-5:2004)
-26-	Chlorine Service. Vented. Special Cleaning. Assembled Dry. (for CS, Hastelloy and Ni-Cu Valves. Ball Must be Hastelloy or Ni-CU)
-35-	PTFE Seats and Seals
-38-	PEEK Seats and Graphite Packing
-49-	No Lubrication. Assembled Dry
-65-	MPTFE Seats and Graphite Packing (Fire Safe)
-67-	Cleaned for Industrial Gases
-69-	Drilled and Tapped Purge Port with Plug
-70-	4" Extended Bonnet
-73-	316 Stainless Steel Spiral Wound Gaskets with PTFE Filler
-76-	Live Loaded (Lever)
-77-	Live Loaded (Gear, Actuator)
-80-	TFM 1600 Seats, PTFE Chevron Packing, Spiral Wound PTFE Body Seal, PEEK Bearing
-82-	Flat Face Flanges
-90-	Double Packed 4" Extended Bonnet
-9P-	Double Packed 4" Extended Bonnet with Monitoring Port
-CE-	CE Marking. See Page D-3 "Product Approvals" for Availability
-EF-	Graphite Packing (API 641 Compliant) (Not Available on 1/2" Size)
-EP-	Garlock EVSP Stem Packing with Spiral Wound Graphite Gasket (Fire Safe by Design)
-KF-	PCTFE Stem Bearing
-TC-	With Test Certificate
-TD-	Tested to API Spec 6D
-UA-	AIS (American Iron & Steel) Compliant
-UL-	UL & CSA Listed (with Markings)
-ZP1-	Fugitive Emissions Packing (Viton)
-ZP2-	Fugitive Emissions Packing (Buna-N)
-ZP3-	Fugitive Emissions Packing (Kalrez)

Pressure/Temperature Ratings - Page M-11, Graph No. 5

DIMENSIONS

PART NO.	SIZE	A	B	C	D	E	F	G	H	I	J	K	L	M	WT.
88A-903-01A	1/2"	0.50	5.50	3.31	2.74	5.12	0.24	1.09	1.44	1.000	0.500	0.375	0.245	10-24	7.0
88A-904-01A	3/4"	0.75	6.00	3.56	3.43	5.54	0.22	1.65	2.13	1.392	0.696	0.500	0.287	1/4-20	9.0
88A-905-01	1"	1.00	6.50	3.82	4.62	6.53	0.47	1.62	2.15	1.392	0.696	0.500	0.287	1/4-20	10.5

REV. 10SEP19

88A-900 SERIES

CARBON STEEL ASME CLASS 300 FLANGED FULL PORT BALL VALVE
1-1/2" THRU 2-1/2"

5 YEAR WARRANTY MADE IN USA

FOR STANDARDS COMPLIANCE AND STANDARD FEATURES REFER TO PAGE D-3.

STANDARD MATERIAL LIST

	PART	MATERIAL
1	Body	ASTM A216 WCB
2	Retainer	ASTM A216 WCB
3	Ball	ASTM A108 Type 1215 or ASTM A216 WCB Chrome Plated
4	Stem	ASTM A108 Type 1215
5	Packing Gland	ASTM A108 Type 1215
6	Stem Seals	PTFE
7	Seats	TFM 1700
8	Gland Screws	ASTM A193 B7
9	Gland Plate	302 & 304 Stainless Steel
10	Stem Nut	ASTM A194 Grade 8I
11	Lever	ASTM A366 Steel with Vinyl Grip
12	Stem Bearing	RPTFE
13	Stop	ASTM A108 Type 1215
14	Stop Screw	SAE J429 Grade 2
15	Lock Plate	ASTM A366 Steel
16	Body Seal	RPTFE
17	Grounding Spring	Stainless Steel
18	Body Joint Stud	ASTM A193 Grade B7
19	Body Joint Nut	ASTM A194 Grade 2H
20	Lockwasher	302 or 304 Stainless Steel

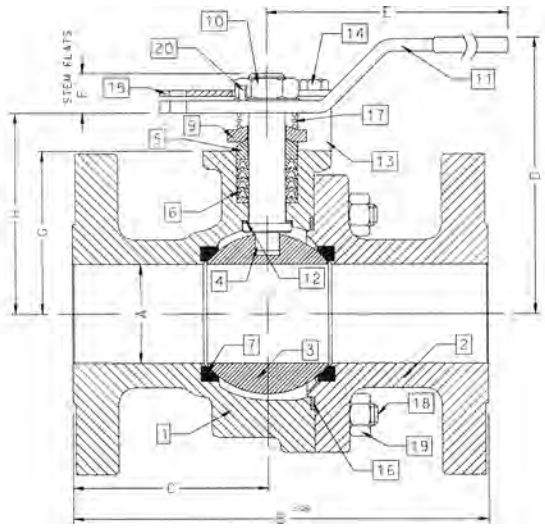

ACTUATOR MOUNTING

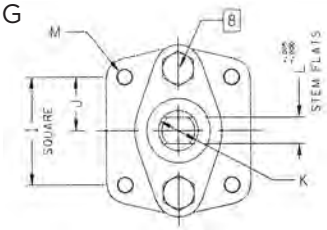

VARIATIONS AVAILABLE

- 88A-940 Series (316 Stainless Steel Ball & Stem)
- 88A-930 Series (Ni-Cu Ball & Stem)

OPTIONS AVAILABLE

(MORE INFORMATION IN SECTION J)

- Minimum quantities apply.
- To specify an option, replace the "01" standard suffix with the suffix of the option.
- To specify multiple options, replace the "01" suffix with the desired suffixes in the numerical order shown below. NOTE: Not all suffixes can be combined together.

(SUFFIX)	OPTION
-01	Standard Configuration
-04-	2-1/4" Stem Extension (Carbon Steel, Zinc Plated)
-14-	Side Vented Ball (Uni-Directional). Not Available with Plated CS Ball
-15-	Wheel Handle, Steel
-21-	UHMWPE Seats
-24-	Fire Safe - Graphite Packing & Seals (API 607, 5th edition, ISO 10497-5:2004) 1-1/2" & 2" (API 607, 6th edition, ISO 10497:2010) 2-1/2"
-26-	Chlorine Service. Vented. Special Cleaning. Assembled Dry. (for CS, Hastelloy and Ni-Cu Valves. Ball Must be Hastelloy or Ni-CU)
-35-	PTFE Seats and Seals
-38-	PEEK Seats and Graphite Packing
-49-	No Lubrication. Assembled Dry
-59-	Stainless Steel External Trim
-65-	MPTFE Seats and Graphite Packing (Fire Safe)
-67-	Cleaned for Industrial Gases
-69-	Drilled and Tapped Purge Ports with Plugs
-70-	4" Extended Bonnet
-73-	316 Stainless Steel Spiral Wound Gaskets with PTFE Filler
-76-	Live Loaded (Lever)
-77-	Live Loaded (Gear, Actuator)
-80-	TFM 1600 Seats, PTFE Chevron Packing, Spiral Wound PTFE Body Seal, PEEK Bearing
-82-	Flat Face Flanges
-90-	Double Packed 4" Extended Bonnet
-9P-	Double Packed 4" Extended Bonnet with Monitoring Port
-CE-	CE Marking. See Page D-3 "Product Approvals" for Availability
-EF-	Graphite Packing (API 641 Compliant)
-EP-	Garlock EVSP Stem Packing with Spiral Wound Graphite Gasket (Fire Safe by Design)
-KF-	PCTFE Stem Bearing
-MG-	Gear Operator with Standard Handwheel
-MH-	Gear Operator with Standard Handwheel & Locking Device
-MJ-	Gear Operator with Oversize Handwheel
-MK-	Gear Operator with Oversize Handwheel & Locking Device
-TC-	With Test Certificate
-TD-	Tested to API Spec 6D
-UA-	AIS (American Iron & Steel) Compliant
-UL-	UL & CSA Listed (with Markings)
-ZP1-	Fugitive Emissions Packing (Viton)
-ZP2-	Fugitive Emissions Packing (Buna-N)
-ZP3-	Fugitive Emissions Packing (Kalrez)

Pressure/Temperature Ratings - Page M-11, Graph No. 5

DIMENSIONS

PART NO.	SIZE	A	B	C	D	E	F	G	H	I	J	K	L	M	WT.
88A-907-01	1-1/2"	1.50	7.50	3.50	4.62	6.65	0.72	2.41	3.09	1.949	0.974	0.625	0.412	5/16-18	21
88A-908-01	2"	2.00	8.50	4.00	5.61	8.41	0.80	3.31	4.08	1.949	0.974	0.750	0.477	5/16-18	37
88A-909-01	2-1/2"	2.50	9.50	4.44	6.24	8.41	0.80	3.94	4.71	1.949	0.974	0.750	0.477	5/16-18	57

REV. 18JUL19

aalberts integrated piping systems

88A-900 SERIES

CARBON STEEL ASME CLASS 300 FLANGED FULL PORT BALL VALVE
3" THRU 6"

5 YEAR WARRANTY MADE IN USA

FOR STANDARDS COMPLIANCE AND STANDARD FEATURES REFER TO PAGE D-3.

STANDARD MATERIAL LIST

	PART	MATERIAL
1	Body	ASTM A216 WCB
2	Retainer	ASTM A216 WCB
3	Ball	ASTM A108 Type 1215 or ASTM A216 WCB Chrome Plated
4	Stem	ASTM A108 Type 1215
5	Packing Gland	ASTM A108 Type 1215
6	Stem Seals	PTFE
7	Seats	TFM 1700
8	Gland Screws	ASTM A193 B7
9	Gland Plate	316 Stainless Steel
10	Adapter Screw	316 Stainless Steel
11	Handle Adapter	ASTM A366 Steel with Vinyl Grip
12	Stem Bearing	RPTFE
13	Stop	ASTM A108 Type 1215
14	Stop Screw	SAE J429 Grade 2
15	Lock Plate	ASTM A366 Steel
16	Body Seal	RPTFE
17	Grounding Spring	Stainless Steel
18	Body Joint Stud	ASTM A193 Grade B7
19	Body Joint Nut	ASTM A194 Grade 2H
20	Pipe Handle	Galvanized Steel (not shown)

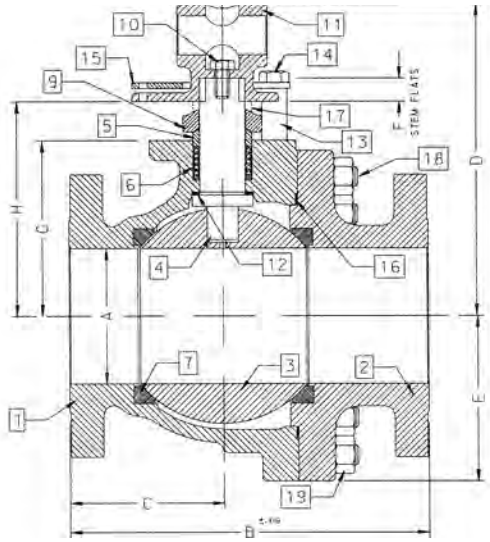

ACTUATOR MOUNTING

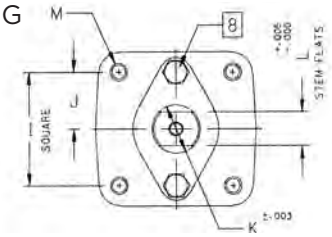

VARIATIONS AVAILABLE

- 88A-940 Series (316 Stainless Steel Ball & Stem)
- 88A-930 Series (Ni-Cu Ball & Stem)

OPTIONS AVAILABLE

(MORE INFORMATION IN SECTION J)

- Minimum quantities apply.
- To specify an option, replace the "01" standard suffix with the suffix of the option.
- To specify multiple options, replace the "01" suffix with the desired suffixes in the numerical order shown below. NOTE: Not all suffixes can be combined together.

(SUFFIX)	OPTION
-01	Standard Configuration
-14-	Side Vented Ball (Uni-Directional). Not Available with Plated CS Ball
-21-	UHMWPE Seats
-24-	Graphite Packing, Spiral Wound Graphite Body Seal, RPTFE Bearing (API 607, 6th Edition, ISO 10497:2010)
-26-	Chlorine Service. Vented. Special Cleaning. Assembled Dry. (for CS, Hastelloy and Ni-Cu Valves. Ball Must be Hastelloy or Ni-CU)
-35-	PTFE Seats and Seals
-38-	PEEK Seats and Graphite Packing
-49-	No Lubrication. Assembled Dry
-59-	Stainless Steel External Trim
-65-	MPTFE Seats and Graphite Packing (Fire Safe)
-67-	Cleaned for Industrial Gases
-69-	Drilled and Tapped Purge Ports with Plugs
-70-	4" Extended Bonnet
-73-	316 Stainless Steel Spiral Wound Gaskets with PTFE Filler
-76-	Live Loaded (Lever)
-77-	Live Loaded (Gear, Actuator)
-80-	TFM 1600 Seats, PTFE Chevron Packing, Spiral Wound PTFE Body Seal, PEEK Bearing
-82-	Flat Face Flanges
-90-	Double Packed 4" Extended Bonnet
-9P-	Double Packed 4" Extended Bonnet with Monitoring Port
-CE-	CE Marking. See Page D-3 "Product Approvals" for Availability
-EF-	Graphite Packing (API 641 Compliant)
-EP-	Garlock EVSP Stem Packing with Spiral Wound Graphite Gasket (Fire Safe by Design)
-KF-	PCTFE Stem Bearing
-MG-	Gear Operator with Standard Handwheel
-MH-	Gear Operator with Standard Handwheel & Locking Device
-MJ-	Gear Operator with Oversize Handwheel
-MK-	Gear Operator with Oversize Handwheel & Locking Device
-TC-	With Test Certificate
-TD-	Tested to API Spec 6D
-UA-	AIS (American Iron & Steel) Compliant
-UL-	UL & CSA Listed (with Markings)
-ZP1-	Fugitive Emissions Packing (Viton)
-ZP2-	Fugitive Emissions Packing (Buna-N)
-ZP3-	Fugitive Emissions Packing (Kalrez)

Pressure/Temperature Ratings - Page M-11, Graph No. 5

DIMENSIONS

PART NO.	SIZE	A	B	C	D	E	F	G	H	I	J	K	L	M	WT.
88A-900-01	3"	3.00	11.12	5.24	8.80	4.06	0.50	4.75	5.95	2.840	1.420	1.250	0.725	3/8-16	78
88A-90A-01	4"	4.00	12.00	5.44	9.99	5.25	0.50	5.94	7.13	2.840	1.420	1.250	0.725	3/8-16	133
88A-90C-01	6"	6.00	15.88	6.82	13.73	7.30	1.00	7.75	9.48	4.596	2.296	2.000	1.375	3/4-10	329

REV. 18JUL19

88A-900 SERIES

CARBON STEEL ASME CLASS 300 FLANGED FULL PORT BALL VALVE
8" THRU 12"

5 YEAR WARRANTY MADE IN USA

FOR STANDARDS COMPLIANCE AND STANDARD FEATURES REFER TO PAGE D-3.

STANDARD MATERIAL LIST

	PART	MATERIAL
1	Body	ASTM A216 WCB
2	Retainer	ASTM A216 WCB
3	Ball	ASTM A108 Type 1215 or A216 WCB
4	Stem	ASTM A108 Type 1215
5	Packing Gland	ASTM A108 Type 1215
6	Stem Seals	PTFE
7	Seats	TFM 1700
8	Gland Screws	ASTM A193 B7
9	Gland Plate	316 Stainless Steel
10	Stem Bearing	RPTFE
11	Body Seal	RPTFE
12	Body Joint Stud	ASTM A193 Grade B7
13	Body Joint Nut	ASTM A194 Grade 2H

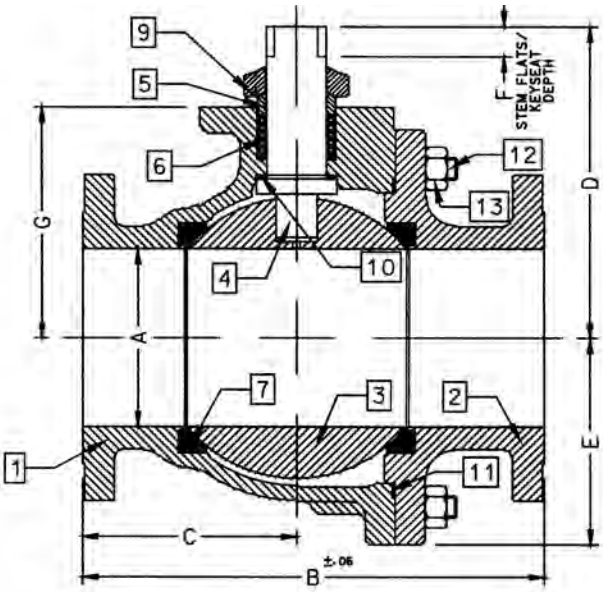

ACTUATOR MOUNTING

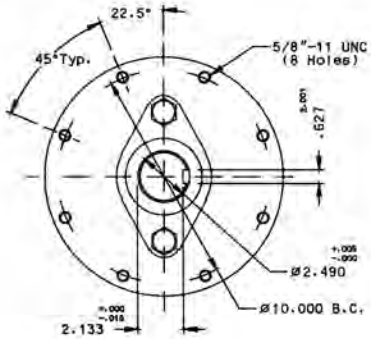

10" & 12"

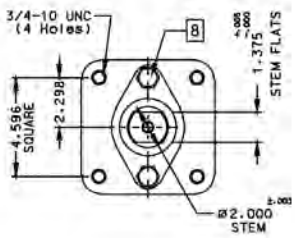

8"

VARIATIONS AVAILABLE

- 88A-930 Series (Ni-Cu Ball & Stem)
- 88A-940 Series (316 Stainless Steel Ball & Stem)

OPTIONS AVAILABLE

(MORE INFORMATION IN SECTION J)

- Minimum quantities apply.
- To specify an option, replace the "01" standard suffix with the suffix of the option.
- To specify multiple options, replace the "01" suffix with the desired suffixes in the numerical order shown below. NOTE: Not all suffixes can be combined together.

(SUFFIX)	OPTION
-01	Standard Configuration
-14-	Side Vented Ball (Uni-Directional). Not Available with Plated CS Ball
-21-	UHMWPE Seats
-24-	Graphite Packing, Spiral Wound Graphite Body Seal, RPTFE Bearing (API 607, 6th Edition, ISO 10497:2010)
-26-	Chlorine Service. Vented. Special Cleaning. Assembled Dry. (for CS, Hastelloy and Ni-Cu Valves. Ball Must be Hastelloy or Ni-CU)
-35-	PTFE Seats and Seals
-49-	No Lubrication. Assembled Dry
-65-	MPTFE Seats and Graphite Packing (Fire Safe)
-67-	Cleaned for Industrial Gas
-69-	Drilled and Tapped Purge Ports with Plugs
-70-	4" Extended Bonnet (8" Only)
-77-	Live Loaded (Gear, Actuator)
-80-	TFM 1600 Seats, PTFE Chevron Packing, Spiral Wound PTFE Body Seal, PEEK Bearing
-82-	Flat Face Flanges
-90-	Double Packed 4" Extended Bonnet
-9P-	Double Packed 4" Extended Bonnet with Monitoring Port
-CE-	CE Marking. See Page D-3 "Product Approvals" for Availability
-EF-	Graphite Packing (API 641 Compliant)
-EP-	Garlock EVSP Stem Packing with Spiral Wound Graphite Gasket (Fire Safe by Design)
-KF-	PCTFE Stem Bearing
-MG-	Gear Operator with Standard Handwheel
-MH-	Gear Operator with Standard Handwheel & Locking Device
-MJ-	Gear Operator with Oversize Handwheel
-MK-	Gear Operator with Oversize Handwheel & Locking Device
-TC-	With Test Certificate
-TD-	Tested to API Spec 6D
-UA-	AIS (American Iron & Steel) Compliant
-UL-	UL & CSA Listed (with Markings)
-ZP1-	Fugitive Emissions Packing (Viton)
-ZP2-	Fugitive Emissions Packing (Buna-N)
-ZP3-	Fugitive Emissions Packing (Kalrez)

Pressure/Temperature Ratings - Page M-11, Graph No. 5

DIMENSIONS

PART NO.	SIZE	A	B	C	D	E	F	G
88A-90E-01	8"	8.00	19.75	9.38	12.83	9.56	1.00	10.22
88A-90G-01	10"	10.00	22.38	10.95	18.57	11.33	2.31	12.80
88A-90H-01	12"	12.00	25.50	12.84	20.31	13.40	2.31	14.92

REV. 18JUL19

aalberts integrated piping systems

88B-100 SERIES

CARBON STEEL ASME CLASS 150 FLANGED STD. PORT BALL VALVE
3"

5 YEAR WARRANTY MADE IN USA

FOR STANDARDS COMPLIANCE AND STANDARD FEATURES REFER TO PAGE D-3.

STANDARD MATERIAL LIST

	PART	MATERIAL
1	Body	ASTM A216-WCB
2	Retainer	ASTM A108 Type 1215
3	Ball	ASTM A108 Type 1215 Chrome Plated
4	Stem	ASTM A108 Type 1215 Chrome Plated
5	Packing Gland	ASTM A108 Type 1215
6	Stem Seals	PTFE
7	Seats	TFM 1700
8	Gland Screws	ASTM A193 B7
9	Gland Plate	316 Stainless Steel
10	Stem Nut	18-8 Stainless Steel
11	Lever	316 Stainless Steel with Vinyl Grip
12	Stem Bearing	RPTFE
13	Stop	ASTM A108 Type 1215
14	Stop Screw	SAE J429 Grade 2
15	Lock Plate	ASTM A366 Steel
16	Body Seal	RPTFE
17	Grounding Spring	Stainless Steel
18	Lockwasher	302 or 304 Stainless Steel

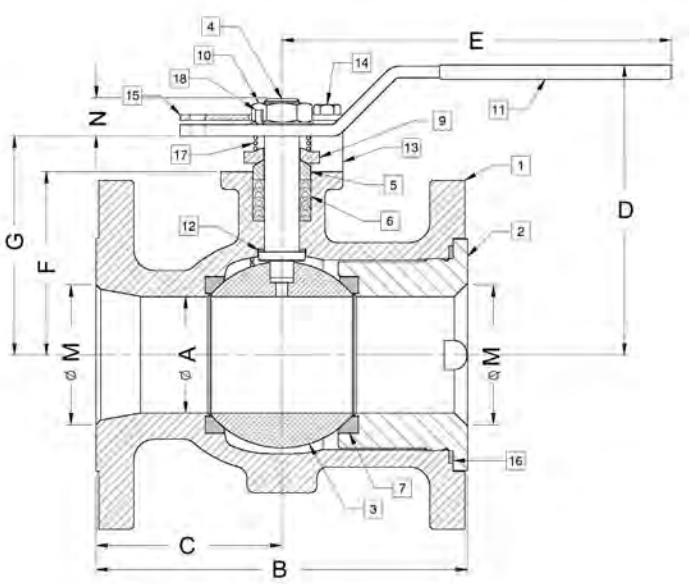

ACTUATOR MOUNTING

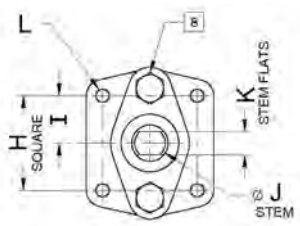

VARIATIONS AVAILABLE

- 88B-130 Series (Ni-Cu Ball & Stem)
- 88B-140 Series (316 Stainless Steel Ball & Stem)

OPTIONS AVAILABLE

(MORE INFORMATION IN SECTION J)

- Minimum quantities apply.
- To specify an option, replace the "01" standard suffix with the suffix of the option.
- To specify multiple options, replace the "01" suffix with the desired suffixes in the numerical order shown below. NOTE: Not all suffixes can be combined together.

(SUFFIX)	OPTION
-01	Standard Configuration
-04-	2-1/4" Stem Extension (Carbon Steel, Zinc Plated)
-14-	Side Vented Ball (Uni-Directional). Not Available with Plated CS Ball
-21-	UHMWPE Seats
-24-	Graphite Packing, Spiral Wound Graphite Body Seal, RPTFE Bearing (API 607, 6th Edition, ISO 10497:2010)
-26-	Chlorine Service. Vented. Special Cleaning. Assembled Dry. (for CS, Hastelloy and Ni-Cu Valves. Ball Must be Hastelloy or Ni-CU)
-35-	PTFE Seats and Seals
-38-	PEEK Seats and Graphite Packing (3" Only)
-49-	No Lubrication. Assembled Dry
-65-	MPTFE Seats and Graphite Packing (Fire Safe)
-67-	Cleaned for Industrial Gases
-69-	Drilled and Tapped Purge Ports with Plugs
-70-	4" Extended Bonnet
-76-	Live Loaded (Lever)
-77-	Live Loaded (Gear, Actuator)
-80-	TFM 1600 Seats, PTFE Chevron Packing, Spiral Wound PTFE Body Seal, PEEK Bearing
-82-	Flat Face Flanges
-90-	Double Packed 4" Extended Bonnet
-9P-	Double Packed 4" Extended Bonnet with Monitoring Port
-CE-	CE Marking. See Page D-3 "Product Approvals" for Availability
-EF-	Graphite Packing (API 641 Compliant)
-EP-	Garlock EVSP Stem Packing with Spiral Wound Graphite Gasket (Fire Safe by Design)
-KF-	PCTFE Stem Bearing
-MG-	Gear Operator with Standard Handwheel
-MH-	Gear Operator with Standard Handwheel & Locking Device
-MJ-	Gear Operator with Oversize Handwheel
-MK-	Gear Operator with Oversize Handwheel & Locking Device
-TC-	With Test Certificate
-TD-	Tested to API Spec 6D
-UA-	AIS (American Iron & Steel) Compliant
-UL-	UL & CSA Listed (with Markings)
-ZP1-	Fugitive Emissions Packing (Viton)
-ZP2-	Fugitive Emissions Packing (Buna-N)
-ZP3-	Fugitive Emissions Packing (Kalrez)

Pressure/Temperature Ratings - Page M-9, Graph No. 1

DIMENSIONS

PART NO.	SIZE	A	B	C	D	E	F	G	H	I	J	K	L	M	N	WT.
88B-100-01	3"	2.50	8.00	4.00	6.23	8.40	3.93	4.70	1.949	0.974	0.750	0.477	5/16-18	3.00	0.77	43

REV. 18JUL19

88B-100 SERIES

CARBON STEEL ASME CLASS 150 FLANGED STD. PORT BALL VALVE
4" THRU 10" SHORT PATTERN

5 YEAR WARRANTY MADE IN USA

FOR STANDARDS COMPLIANCE AND STANDARD FEATURES REFER TO PAGE D-3.

STANDARD MATERIAL LIST

	PART	MATERIAL
1	Body	ASTM A216-WCB
2	Retainer	ASTM A108 Type 1215
3	Ball	ASTM A108 Type 1215 (Chrome Plate)
4	Stem	ASTM A108 Type 1215 (Chrome Plate)
5	Packing Gland	ASTM A108 Type 1215
6	Stem Seals	PTFE
7	Seats	TFM 1700
8	Gland Screws	ASTM A193 B7
9	Gland Plate	316 Stainless Steel
10	Adapter Screw	18-8 Stainless Steel
11	Handle Adapter	316 Stainless Steel
12	Stem Bearing	RPTFE
13	Stop	ASTM A108 Type 1215
14	Stop Screw	SAE J429 Grade 2
15	Lock Plate	ASTM A366 Stainless Steel
16	Body Seal	RPTFE
17	Lockwasher	302 or 304 Stainless Steel
18	Grounding Spring	Stainless Steel
19	Adapter Screw	18-8 Stainless Steel
20	Pipe Handle	Galvanized Steel (not shown)

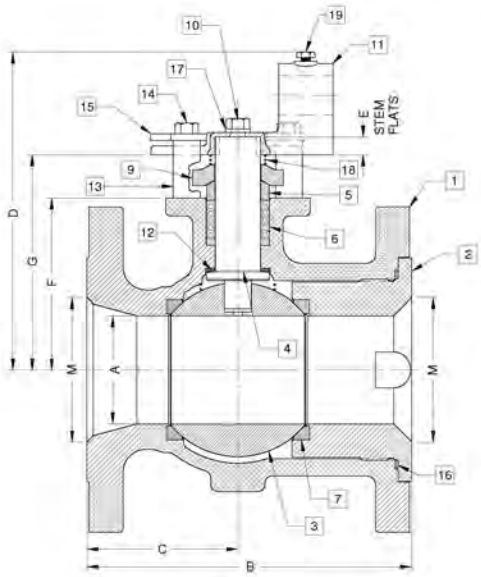

ACTUATOR MOUNTING

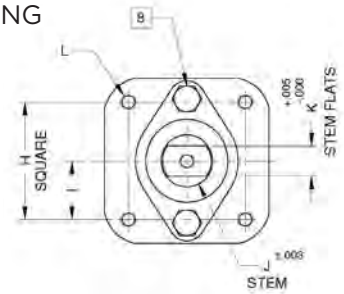

VARIATIONS AVAILABLE

- 88B-130 Series (Ni-Cu Ball & Stem)
- 88B-140 Series (316 Stainless Steel Ball & Stem)

OPTIONS AVAILABLE

(MORE INFORMATION IN SECTION J)

- Minimum quantities apply.
- To specify an option, replace the "01" standard suffix with the suffix of the option.
- To specify multiple options, replace the "01" suffix with the desired suffixes in the numerical order shown below. NOTE: Not all suffixes can be combined together.

(SUFFIX)	OPTION
-01	Standard Configuration
-14-	Side Vented Ball (Uni-Directional). Not Available with Plated CS Ball
-21-	UHMWPE Seats
-24-	Graphite Packing, Spiral Wound Graphite Body Seal, RPTFE Bearing (API 607, 6th Edition, ISO 10497:2010)
-26-	Chlorine Service. Vented. Special Cleaning. Assembled Dry. (for CS, Hastelloy and Ni-Cu Valves. Ball Must be Hastelloy or Ni-CU)
-35-	PTFE Seats and Seals
-38-	PEEK Seats and Graphite Packing
-49-	No Lubrication. Assembled Dry
-65-	MPTFE Seats and Graphite Packing (Fire Safe)
-67-	Cleaned for Industrial Gases
-69-	Drilled and Tapped Purge Ports with Plugs
-70-	4" Extended Bonnet
-76-	Live Loaded (Lever)
-77-	Live Loaded (Gear, Actuator)
-80-	TFM 1600 Seats, PTFE Chevron Packing, Spiral Wound PTFE Body Seal, PEEK Bearing
-82-	Flat Face Flanges
-90-	Double Packed 4" Extended Bonnet
-9P-	Double Packed 4" Extended Bonnet with Monitoring Port
-CE-	CE Marking. See Page D-3 "Product Approvals" for Availability
-EF-	Graphite Packing (API 641 Compliant)
-EP-	Garlock EVSP Stem Packing with Spiral Wound Graphite Gasket (Fire Safe by Design)
-KF-	PCTFE Stem Bearing
-MG-	Gear Operator with Standard Handwheel
-MH-	Gear Operator with Standard Handwheel & Locking Device
-MJ-	Gear Operator with Oversize Handwheel
-MK-	Gear Operator with Oversize Handwheel & Locking Device
-TC-	With Test Certificate
-TD-	Tested to API Spec 6D
-UA-	AIS (American Iron & Steel) Compliant
-UL-	UL & CSA Listed (with Markings)
-ZP1-	Fugitive Emissions Packing (Viton)
-ZP2-	Fugitive Emissions Packing (Buna-N)
-ZP3-	Fugitive Emissions Packing (Kalrez)

Pressure/Temperature Ratings - Page M-9, Graph No. 1

DIMENSIONS

PART NO.	SIZE	A	B	C	D	E	F	G	H	I	J	K	L	M	WT.
88B-10A-01	4"	3.00	9.00	4.18	8.80	0.50	4.75	5.95	2.840	1.420	1.250	0.725	3/8-16	4.00	72
88B-10C-01	6"	4.00	10.50	5.25	9.99	0.50	5.94	7.13	2.840	1.420	1.250	0.725	3/8-16	6.00	110
88B-10E-01	8"	6.00	11.50	5.75	13.61	1.00	7.63	9.36	4.596	2.298	2.000	1.375	3/4-10	8.00	210
88B-10G-01	10"	8.00	13.00	6.50	N/A	1.00	9.50	11.23	4.596	2.298	2.000	1.375	3/4-10	10.0	350

REV. 18JUL19

aalberts integrated piping systems

88L-140 SERIES

LOW TEMP. CARBON STEEL ASME CLASS 150 FLANGED STD. PORT BALL VALVE
1-1/2" THRU 2"

5 YEAR WARRANTY MADE IN USA

FOR STANDARDS COMPLIANCE AND STANDARD FEATURES REFER TO PAGE D-3 AND RATED TO -50°F (-46°C).

STANDARD MATERIAL LIST

	PART	MATERIAL
1	Body	ASTM A352-LCC
2	Retainer	ASTM A352-LCC
3	Ball	ASTM A276-316
4	Stem	ASTM A276-316
5	Packing Gland	ASTM A108 Type 1215
6	Stem Seals	PTFE
7	Seats	TFM 1700
8	Gland Screws	ASTM A193 B7
9	Gland Plate	302 or 304 Stainless Steel
10	Stem Nut	316 Stainless Steel
11	Lever	ASTM A366 Steel with Vinyl Grip
12	Stem Bearing	RPTFE
13	Stop	ASTM A108 Type 1215
14	Stop Screw	SAE J429 Grade 2
15	Lock Plate	ASTM A366 Steel
16	Body Seal	RPTFE
17	Lockwasher	302 or 304 Stainless Steel
18	Grounding Spring	Stainless Steel

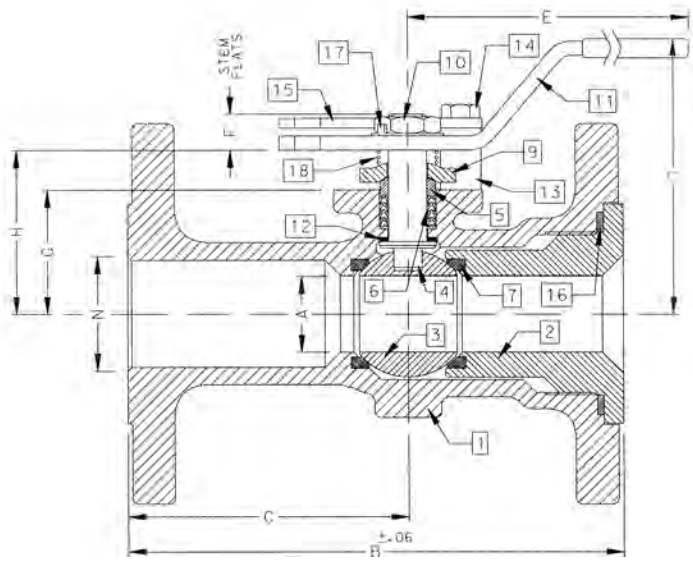

ACTUATOR MOUNTING

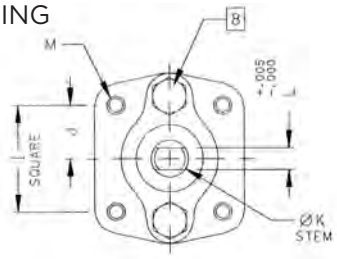

VARIATIONS AVAILABLE

- 88L-130 Series (Ni-Cu Ball & Stem)

OPTIONS AVAILABLE

(MORE INFORMATION IN SECTION J)

- Minimum quantities apply.
- To specify an option, replace the "01" standard suffix with the suffix of the option.
- To specify multiple options, replace the "01" suffix with the desired suffixes in the numerical order shown below. NOTE: Not all suffixes can be combined together.

(SUFFIX)	OPTION
-01	Standard Configuration
-04-	2-1/4" Stem Extension (Carbon Steel, Zinc Plated)
-10-	Stainless Steel Lever and Nut
-14-	Side Vented Ball (Uni-Directional). Not Available with Plated CS Ball
-15-	Wheel Handle, Steel
-21-	UHMWPE Seats
-24-	Graphite Packing, Spiral Wound Graphite Body Seal, RPTFE Bearing (API 607, 6th Edition, ISO 10497:2010)
-26-	Chlorine Service. Vented. Special Cleaning. Assembled Dry. (for CS, Hastelloy and Ni-Cu Valves. Ball Must be Hastelloy or Ni-CU)
-35-	PTFE Seats and Seals
-38-	PEEK Seats and Graphite Packing
-49-	No Lubrication. Assembled Dry
-65-	MPTFE Seats and Graphite Packing (Fire Safe)
-67-	Cleaned for Industrial Gases
-69-	Drilled and Tapped Purge Port with Plug
-70-	4" Extended Bonnet
-73-	316 Stainless Steel Spiral Wound Gaskets with PTFE Filler
-76-	Live Loaded (Lever)
-77-	Live Loaded (Gear, Actuator)
-80-	TFM 1600 Seats, PTFE Chevron Packing, Spiral Wound PTFE Body Seal, PEEK Bearing
-82-	Flat Face Flanges
-90-	Double Packed 4" Extended Bonnet
-9P-	Double Packed 4" Extended Bonnet with Monitoring Port
-CE-	CE Marking. See Page D-3 "Product Approvals" for Availability
-EF-	Graphite Packing (API 641 Compliant)
-EP-	Garlock EVSP Stem Packing with Spiral Wound Graphite Gasket (Fire Safe by Design)
-KF-	PCTFE Stem Bearing
-TC-	With Test Certificate
-TD-	Tested to API Spec 6D
-UL-	UL Listed
-ZP1-	Fugitive Emissions Packing (Viton)
-ZP2-	Fugitive Emissions Packing (Buna-N)
-ZP3-	Fugitive Emissions Packing (Kalrez)

Pressure/Temperature Ratings - Page M-23, Graph No. 31

DIMENSIONS

PART NO.	SIZE	A	B	C	D	E	F	G	H	I	J	K	L	M	N	WT.
88L-147-01A	1-1/2"	1.25	6.50	3.50	4.85	6.53	0.47	1.85	2.38	1.392	0.696	0.500	0.287	1/4-20	1.50	9
88L-148-01	2"	1.50	7.00	3.69	4.62	6.65	0.72	2.41	3.09	1.949	0.974	0.625	0.412	5/16-18	2.00	18

REV. 18JUL19

88L-140 SERIES

LOW TEMP. CARBON STEEL ASME CLASS 150 FLANGED STD. PORT BALL VALVE
2-1/2" THRU 3"

5 YEAR WARRANTY MADE IN USA

FOR STANDARDS COMPLIANCE AND STANDARD FEATURES REFER TO PAGE D-3 AND RATED TO -50°F (-46°C).

STANDARD MATERIAL LIST

	PART	MATERIAL
1	Body	ASTM A352-LCC
2	Retainer	ASTM A352-LCC
3	Ball	ASTM A276-316 or A351-CF8M
4	Stem	ASTM A276-316
5	Packing Gland	ASTM A108 Type 1215
6	Stem Seals	PTFE
7	Seats	TFM 1700
8	Gland Screws	ASTM A193 B7
9	Gland Plate	302 or 304 Stainless Steel
10	Stem Nut	ASTM A194 Grade 8
11	Lever	ASTM A366 Steel with Vinyl Grip
12	Stem Bearing	RPTFE
13	Stop	ASTM A108 Type 1215
14	Stop Screw	SAE J429 Grade 2
15	Lock Plate	ASTM A366 Steel
16	Body Seal	RPTFE
17	Grounding Spring	Stainless Steel
18	Body Joint Stud	ASTM A193 Grade B7
19	Body Joint Nut	ASTM A194 Grade 2H
20	Lockwasher	302 or 304 Stainless Steel

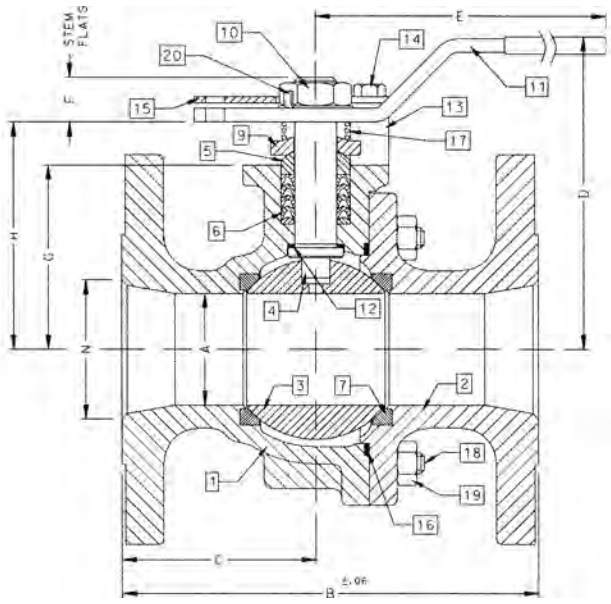

ACTUATOR MOUNTING

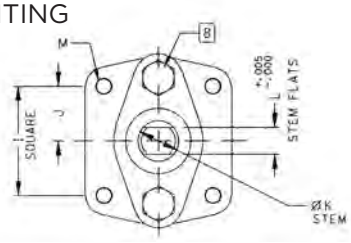

VARIATIONS AVAILABLE

- 88L-140 Series (316 Stainless Steel Ball & Stem)

OPTIONS AVAILABLE

(MORE INFORMATION IN SECTION J)

- Minimum quantities apply.
- To specify an option, replace the "01" standard suffix with the suffix of the option.
- To specify multiple options, replace the "01" suffix with the desired suffixes in the numerical order shown below. NOTE: Not all suffixes can be combined together.

(SUFFIX)	OPTION
-01	Standard Configuration
-04-	2-1/4" Stem Extension (Carbon Steel, Zinc Plated)
-10-	Stainless Steel Lever and Nut
-14-	Side Vented Ball (Uni-Directional). Not Available with Plated CS Ball
-21-	UHMWPE Seats
-24-	Graphite Packing, Spiral Wound Graphite Body Seal, RPTFE Bearing (API 607, 6th Edition, ISO 10497:2010)
-26-	Chlorine Service. Vented. Special Cleaning. Assembled Dry. (for CS, Hastelloy and Ni-Cu Valves. Ball Must be Hastelloy or Ni-CU)
-35-	PTFE Seats and Seals
-38-	PEEK Seats and Graphite Packing
-49-	No Lubrication. Assembled Dry
-59-	Stainless Steel External Trim
-65-	MPTFE Seats and Graphite Packing (Fire Safe)
-67-	Cleaned for Industrial Gases
-69-	Drilled and Tapped Purge Port with Plugs
-70-	4" Extended Bonnet
-73-	316 Stainless Steel Spiral Wound Gaskets with PTFE Filler
-76-	Live Loaded (Lever)
-77-	Live Loaded (Gear, Actuator)
-80-	TFM 1600 Seats, PTFE Chevron Packing, Spiral Wound PTFE Body Seal, PEEK Bearing
-82-	Flat Face Flanges
-90-	Double Packed 4" Extended Bonnet
-9P-	Double Packed 4" Extended Bonnet with Monitoring Port
-CE-	CE Marking. See Page D-3 "Product Approvals" for Availability
-EF-	Graphite Packing (API 641 Compliant)
-EP-	Garlock EVSP Stem Packing with Spiral Wound Graphite Gasket (Fire Safe by Design)
-KF-	PCTFE Stem Bearing
-MG-	Gear Operator with Standard Handwheel
-MH-	Gear Operator with Standard Handwheel & Locking Device
-MJ-	Gear Operator with Oversize Handwheel
-MK-	Gear Operator with Oversize Handwheel & Locking Device
-TC-	With Test Certificate
-TD-	Tested to API Spec 6D
-UL-	UL Listed
-ZP1-	Fugitive Emissions Packing (Viton)
-ZP2-	Fugitive Emissions Packing (Buna-N)
-ZP3-	Fugitive Emissions Packing (Kalrez)

Pressure/Temperature Ratings - Page M-23, Graph No. 31

DIMENSIONS

PART NO.	SIZE	A	B	C	D	E	F	G	H	I	J	K	L	M	N	WT.
88L-149-01	2-1/2"	2.00	7.50	3.50	5.61	8.41	0.80	3.31	4.08	1.949	0.974	0.750	0.477	5/16-18	2.50	27
88L-140-01	3"	2.50	8.00	3.51	6.24	8.41	0.80	3.94	4.71	1.949	0.974	0.750	0.477	5/16-18	3.00	34

REV. 18JUL19

aalberts integrated piping systems

88L-140 SERIES

LOW TEMP. CARBON STEEL ASME CLASS 150 FLANGED STD. PORT BALL VALVE
4" THRU 8"

5 YEAR WARRANTY MADE IN USA

FOR STANDARDS COMPLIANCE AND STANDARD FEATURES REFER TO PAGE D-3 AND RATED TO -50°F (-46°C).

STANDARD MATERIAL LIST

	PART	MATERIAL
1	Body	ASTM A352-LCC
2	Retainer	ASTM A352-LCC
3	Ball	ASTM A276-316 or A351-CF8M
4	Stem	ASTM A276-316
5	Packing Gland	ASTM A108 Type 1215
6	Stem Seals	PTFE
7	Seats	TFM 1700
8	Gland Screws	ASTM A193 B7
9	Gland Plate	316 Stainless Steel
10	Adaptor Screw	316 Stainless Steel
11	Handle Adapter	ASTM A366 Steel with Vinyl Grip
12	Stem Bearing	RPTFE
13	Stop	ASTM A108 Type 1215
14	Stop Screw	SAE J429 Grade 2
15	Lock Plate	ASTM A366 Steel
16	Body Seal	RPTFE
17	Grounding Spring	Stainless Steel
18	Body Joint Stud	ASTM A193 Grade B7
19	Body Joint Nut	ASTM A194 Grade 2H
20	Adapter Screw	18-8 Stainless Steel
21	Pipe Handle	Galvanized Steel (not shown)

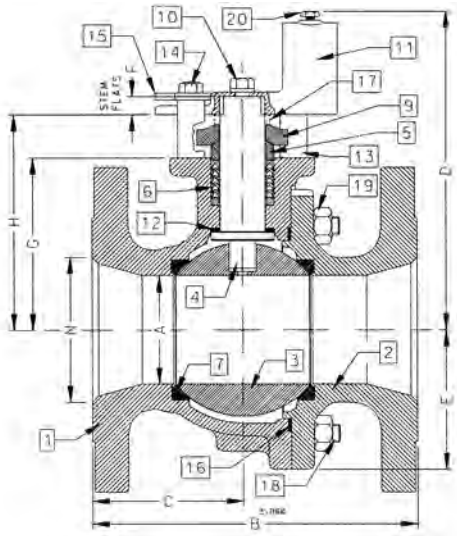

ACTUATOR MOUNTING

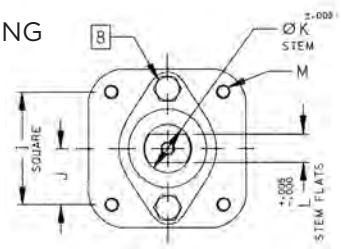

VARIATIONS AVAILABLE

- 88L-140 Series (316 Stainless Steel Ball & Stem)

OPTIONS AVAILABLE

(MORE INFORMATION IN SECTION J)

- Minimum quantities apply.
- To specify an option, replace the "01" standard suffix with the suffix of the option.
- To specify multiple options, replace the "01" suffix with the desired suffixes in the numerical order shown below. NOTE: Not all suffixes can be combined together.

(SUFFIX)	OPTION
-01	Standard Configuration
-14-	Side Vented Ball (Uni-Directional). Not Available with Plated CS Ball
-21-	UHMWPE Seats
-24-	Graphite Packing, Spiral Wound Graphite Body Seal, RPTFE Bearing (API 607, 6th Edition, ISO 10497:2010)
-26-	Chlorine Service. Vented. Special Cleaning. Assembled Dry. (for CS, Hastelloy and Ni-Cu Valves. Ball Must be Hastelloy or Ni-CU)
-35-	PTFE Seats and Seals
-49-	No Lubrication. Assembled Dry
-59-	Stainless Steel External Trim
-65-	MPTFE Seats and Graphite Packing (Fire Safe)
-67-	Cleaned for Industrial Gases
-69-	Drilled and Tapped Purge Ports with Plugs
-70-	4" Extended Bonnet
-73-	316 Stainless Steel Spiral Wound Gaskets with PTFE Filler
-76-	Live Loaded (Lever)
-77-	Live Loaded (Gear, Actuator)
-80-	TFM 1600 Seats, PTFE Chevron Packing, Spiral Wound PTFE Body Seal, PEEK Bearing
-82-	Flat Face Flanges
-90-	Double Packed 4" Extended Bonnet
-9P-	Double Packed 4" Extended Bonnet with Monitoring Port
-CE-	CE Marking. See Page D-3 "Product Approvals" for Availability
-EF-	Graphite Packing (API 641 Compliant)
-EP-	Garlock EVSP Stem Packing with Spiral Wound Graphite Gasket (Fire Safe by Design)
-KF-	PCTFE Stem Bearing
-MG-	Gear Operator with Standard Handwheel
-MH-	Gear Operator with Standard Handwheel & Locking Device
-MJ-	Gear Operator with Oversize Handwheel
-MK-	Gear Operator with Oversize Handwheel & Locking Device
-TC-	With Test Certificate
-TD-	Tested to API Spec 6D
-UL-	UL Listed
-ZP1-	Fugitive Emissions Packing (Viton)
-ZP2-	Fugitive Emissions Packing (Buna-N)
-ZP3-	Fugitive Emissions Packing (Kalrez)

Pressure/Temperature Ratings - Page M-23, Graph No. 31

DIMENSIONS

PART NO.	SIZE	A	B	C	D	E	F	G	H	I	J	K	L	M	N	WT.
88L-14A-01	4"	3.00	9.00	4.18	8.80	3.88	0.50	4.75	5.95	2.840	1.420	1.250	0.725	3/8-16	4.00	73
88L-14C-01	6"	4.00	10.50	4.69	9.99	5.13	0.50	5.94	7.13	2.840	1.420	1.250	0.725	3/8-16	6.00	117
88L-14E-01	8"	6.00	18.00	9.00	13.73	7.00	1.00	7.75	9.48	4.596	2.298	2.000	1.375	3/4-10	8.00	310

REV. 18JUL19

88L-140 SERIES

LOW TEMP. CARBON STEEL ASME CLASS 150 FLANGED STD. PORT BALL VALVE
10"

5 YEAR WARRANTY MADE IN USA

FOR STANDARDS COMPLIANCE AND STANDARD FEATURES REFER TO PAGE D-3 AND RATED TO -50°F (-46°C).

STANDARD MATERIAL LIST

	PART	MATERIAL
1	Body	ASTM A352-LCC
2	Retainer	ASTM A352-LCC
3	Ball	ASTM A276-316 or A351-CF8M
4	Stem	ASTM A276-316
5	Packing Gland	ASTM A108 Type 1215
6	Stem Seals	PTFE
7	Seats	TFM 1700
8	Gland Screws	ASTM A193 B7
9	Gland Plate	316 Stainless Steel
10	Stem Bearing	RPTFE
11	Body Seal	RPTFE
12	Body Joint Stud	ASTM A193 Grade B7
13	Body Joint Nut	ASTM A194 Grade 2H

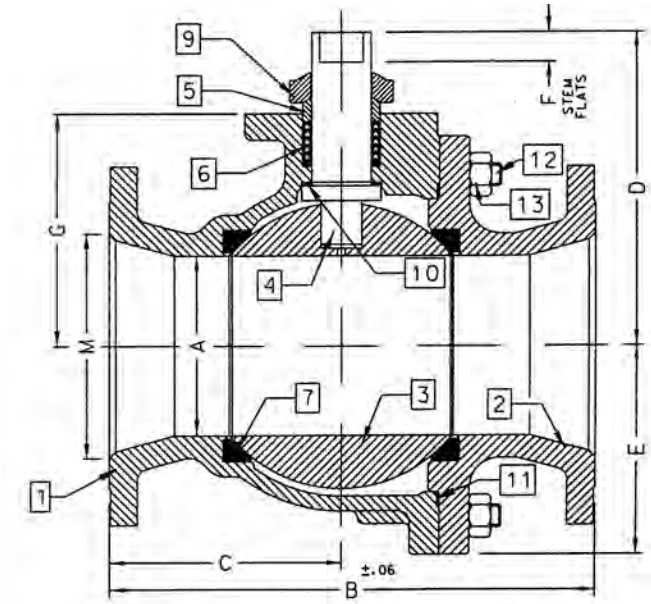

ACTUATOR MOUNTING

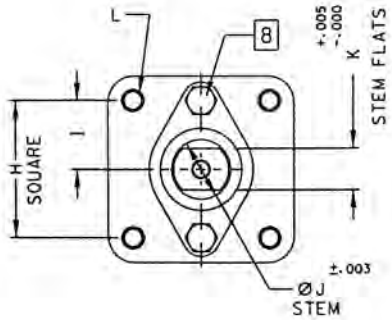

VARIATIONS AVAILABLE

- 88L-130 Series (Ni-Cu Ball & Stem)

OPTIONS AVAILABLE

(MORE INFORMATION IN SECTION J)

- Minimum quantities apply.
- To specify an option, replace the "01" standard suffix with the suffix of the option.
- To specify multiple options, replace the "01" suffix with the desired suffixes in the numerical order shown below. NOTE: Not all suffixes can be combined together.

(SUFFIX)	OPTION
-01	Standard Configuration
-14-	Side Vented Ball (Uni-Directional). Not Available with Plated CS Ball
-21-	UHMWPE Seats
-24-	Graphite Packing, Spiral Wound Graphite Body Seal, RPTFE Bearing (API 607, 6th Edition, ISO 10497:2010)
-26-	Chlorine Service. Vented. Special Cleaning. Assembled Dry. (for CS, Hastelloy and Ni-Cu Valves. Ball Must be Hastelloy or Ni-CU)
-35-	PTFE Seats and Seals
-49-	No Lubrication. Assembled Dry
-65-	MPTFE Seats and Graphite Packing (Fire Safe)
-67-	Cleaned for Industrial Gases
-69-	Drilled and Tapped Purge Port with Plugs
-70-	4" Extended Bonnet
-77-	Live Loaded (Gear, Actuator)
-80-	TFM 1600 Seats, PTFE Chevron Packing, Spiral Wound PTFE Body Seal, PEEK Bearing
-82-	Flat Face Flanges
-90-	Double Packed 4" Extended Bonnet
-9P-	Double Packed 4" Extended Bonnet with Monitoring Port
-CE-	CE Marking. See Page D-3 "Product Approvals" for Availability
-EF-	Graphite Packing (API 641 Compliant)
-EP-	Garlock EVSP Stem Packing with Spiral Wound Graphite Gasket (Fire Safe by Design)
-KF-	PCTFE Stem Bearing
-MG-	Gear Operator with Standard Handwheel
-MH-	Gear Operator with Standard Handwheel & Locking Device
-MJ-	Gear Operator with Oversize Handwheel
-MK-	Gear Operator with Oversize Handwheel & Locking Device
-TC-	With Test Certificate
-TD-	Tested to API Spec 6D
-UL-	UL Listed
-ZP1-	Fugitive Emissions Packing (Viton)
-ZP2-	Fugitive Emissions Packing (Buna-N)
-ZP3-	Fugitive Emissions Packing (Kalrez)

Pressure/Temperature Ratings - Page M-23, Graph No. 31

DIMENSIONS

PART NO.	SIZE	A	B	C	D	E	F	G	H	I	J	K	L	M
88L-14G-01	10"	8.00	21.00	10.37	12.83	9.18	1.00	10.22	4.596	2.298	2.000	1.375	3/4-10	10.00

REV. 18JUL19

aalberts integrated piping systems

88L-240 SERIES

LOW TEMP. CARBON STEEL ASME CLASS 150 FLANGED FULL PORT BALL VALVE
1/2" THRU 1"

5 YEAR WARRANTY MADE IN USA

FOR STANDARDS COMPLIANCE AND STANDARD FEATURES REFER TO PAGE D-3 AND RATED TO -50°F (-46°C).

STANDARD MATERIAL LIST

	PART	MATERIAL
1	Body	ASTM A352-LCC
2	Retainer	ASTM A352-LCC
3	Ball	ASTM A276-316
4	Stem	ASTM A276-316
5	Packing Gland	ASTM A108 Type 1215
6	Stem Seals	PTFE
7	Seats	TFM 1700
8	Gland Screws	ASTM A193 B7
9	Gland Plate	302 or 304 Stainless Steel
10	Stem Nut	316 Stainless Steel
11	Lever	ASTM A366 Steel with Vinyl Grip
12	Stem Bearing	RPTFE
13	Stop	ASTM A108 Type 1215
14	Stop Screw	SAE J429 Grade 2
15	Lock Plate	ASTM A366 Steel
16	Body Seal	RPTFE
17	Lockwasher	302 or 304 Stainless Steel
18	Grounding Spring	Stainless Steel

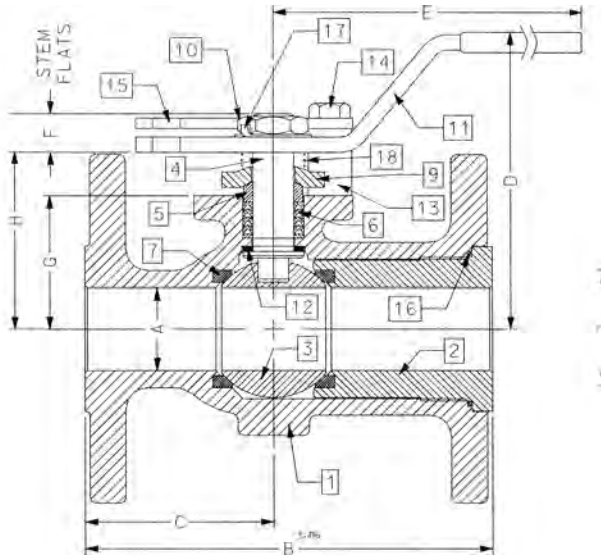

ACTUATOR MOUNTING

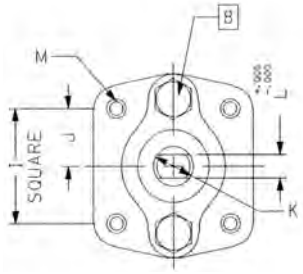

VARIATIONS AVAILABLE

- 88L-230 Series (Ni-Cu Ball & Stem)

OPTIONS AVAILABLE

(MORE INFORMATION IN SECTION J)

- Minimum quantities apply.
- To specify an option, replace the "01" standard suffix with the suffix of the option.
- To specify multiple options, replace the "01" suffix with the desired suffixes in the numerical order shown below. NOTE: Not all suffixes can be combined together.

(SUFFIX)	OPTION
-01	Standard Configuration
-04-	2-1/4" Stem Extension (Carbon Steel, Zinc Plated)
-10-	Stainless Steel Lever and Nut
-14-	Side Vented Ball (Uni-Directional). Not Available with Plated CS Ball
-15-	Wheel Handle, Steel
-21-	UHMWPE Seats
-24-	Graphite Packing, Spiral Wound Graphite Body Seal, RPTFE Bearing (API 607, 6th Edition, ISO 10497:2010)
-26-	Chlorine Service. Vented. Special Cleaning. Assembled Dry. (for CS, Hastelloy and Ni-Cu Valves. Ball Must be Hastelloy or Ni-CU)
-35-	PTFE Seats and Seals
-38-	PEEK Seats and Graphite Packing
-49-	No Lubrication. Assembled Dry
-65-	MPTFE Seats and Graphite Packing (Fire Safe)
-67-	Cleaned for Industrial Gases
-69-	Drilled and Tapped Purge Port with Plug
-70-	4" Extended Bonnet
-73-	316 Stainless Steel Spiral Wound Gaskets with PTFE Filler
-76-	Live Loaded (Lever)
-77-	Live Loaded (Gear, Actuator)
-80-	TFM 1600 Seats, PTFE Chevron Packing, Spiral Wound PTFE Body Seal, PEEK Bearing
-82-	Flat Face Flanges
-90-	Double Packed 4" Extended Bonnet
-9P-	Double Packed 4" Extended Bonnet with Monitoring Port
-CE-	CE Marking. See Page D-3 "Product Approvals" for Availability
-EF-	Graphite Packing (API 641 Compliant) (Not Available on 1/2" Size)
-EP-	Garlock EVSP Stem Packing with Spiral Wound Graphite Gasket (Fire Safe by Design)
-KF-	PCTFE Stem Bearing
-TC-	With Test Certificate
-TD-	Tested to API Spec 6D
-UL-	UL Listed
-ZP1-	Fugitive Emissions Packing (Viton)
-ZP2-	Fugitive Emissions Packing (Buna-N)
-ZP3-	Fugitive Emissions Packing (Kalrez)

Pressure/Temperature Ratings - Page M-23, Graph No. 31

DIMENSIONS

PART NO.	SIZE	A	B	C	D	E	F	G	H	I	J	K	L	M	WT.
88L-243-01A	1/2"	0.50	4.25	2.06	2.74	5.12	0.24	1.09	1.44	1.002	0.501	0.375	0.245	10-24	5
88L-244-01A	3/4"	0.75	4.62	2.18	3.43	5.53	0.22	1.65	2.13	1.392	0.696	0.500	0.287	1/4-20	6
88L-245-01	1"	1.00	5.00	2.32	4.62	6.53	0.47	1.62	2.15	1.392	0.696	0.500	0.287	1/4-20	7

REV. 10SEP19

88L-240 SERIES

LOW TEMP. CARBON STEEL ASME CLASS 150 FLANGED FULL PORT BALL VALVE
1-1/2" THRU 2-1/2"

5 YEAR WARRANTY MADE IN USA

FOR STANDARDS COMPLIANCE AND STANDARD FEATURES REFER TO PAGE D-3 AND RATED TO -50°F (-46°C).

STANDARD MATERIAL LIST

	PART	MATERIAL
1	Body	ASTM A352-LCC
2	Retainer	ASTM A352-LCC
3	Ball	ASTM A276-316 or A351-CF8M
4	Stem	ASTM A276-316
5	Packing Gland	ASTM A108 Type 1215
6	Stem Seals	PTFE
7	Seats	TFM 1700
8	Gland Screws	ASTM A193 B7
9	Gland Plate	302 & 304 Stainless Steel
10	Stem Nut	ASTM A194 Grade 8I
11	Lever	ASTM A366 Steel with Vinyl Grip
12	Stem Bearing	RPTFE
13	Stop	ASTM A108 Type 1215
14	Stop Screw	SAE J429 Grade 2
15	Lock Plate	ASTM A366 Steel
16	Body Seal	RPTFE
17	Grounding Spring	Stainless Steel
18	Body Joint Stud	ASTM A193 Grade B7
19	Body Joint Nut	ASTM A194 Grade 2H
20	Lockwasher	302 or 304 Stainless Steel

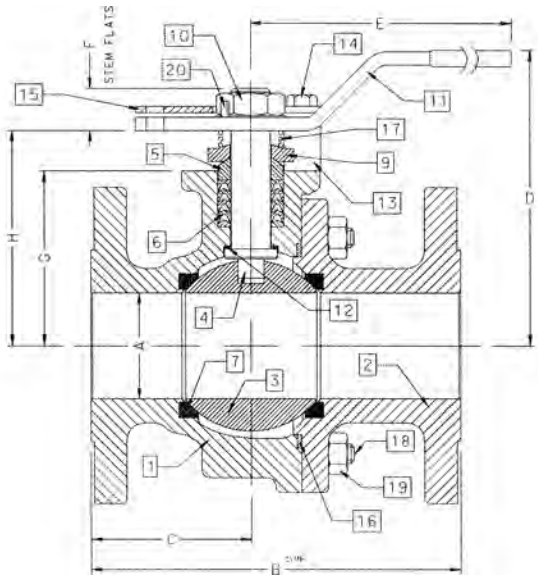

ACTUATOR MOUNTING

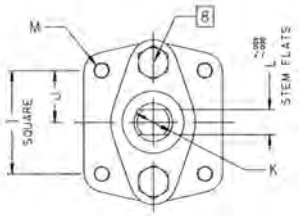

VARIATIONS AVAILABLE

- 88L-230 Series (Ni-Cu Ball & Stem)

OPTIONS AVAILABLE

(MORE INFORMATION IN SECTION J)

- Minimum quantities apply.
- To specify an option, replace the "01" standard suffix with the suffix of the option.
- To specify multiple options, replace the "01" suffix with the desired suffixes in the numerical order shown below. NOTE: Not all suffixes can be combined together.

(SUFFIX)	OPTION
-01	Standard Configuration
-04-	2-1/4" Stem Extension (Carbon Steel, Zinc Plated) (up to 2")
-10-	Stainless Steel Lever and Nut
-14-	Side Vented Ball (Uni-Directional). Not Available with Plated CS Ball
-15-	Wheel Handle, Steel
-21-	UHMWPE Seats
-24-	Graphite Packing, Spiral Wound Graphite Body Seal, RPTFE Bearing (API 607, 6th Edition, ISO 10497:2010)
-26-	Chlorine Service. Vented. Special Cleaning. Assembled Dry. (for CS, Hastelloy and Ni-Cu Valves. Ball Must be Hastelloy or Ni-CU)
-35-	PTFE Seats and Seals
-38-	PEEK Seats and Graphite Packing
-49-	No Lubrication. Assembled Dry
-59-	Stainless Steel External Trim
-65-	MPTFE Seats and Graphite Packing (Fire Safe)
-67-	Cleaned for Industrial Gases
-69-	Drilled and Tapped Purge Ports with Plugs
-70-	4" Extended Bonnet
-73-	316 Stainless Steel Spiral Wound Gaskets with PTFE Filler
-76-	Live Loaded (Lever)
-77-	Live Loaded (Gear, Actuator)
-80-	TFM 1600 Seats, PTFE Chevron Packing, Spiral Wound PTFE Body Seal, PEEK Bearing
-82-	Flat Face Flanges
-90-	Double Packed 4" Extended Bonnet
-9P-	Double Packed 4" Extended Bonnet with Monitoring Port
-CE-	CE Marking. See Page D-3 "Product Approvals" for Availability
-EF-	Graphite Packing (API 641 Compliant)
-EP-	Garlock EVSP Stem Packing with Spiral Wound Graphite Gasket (Fire Safe by Design)
-KF-	PCTFE Stem Bearing
-MG-	Gear Operator with Standard Handwheel
-MH-	Gear Operator with Standard Handwheel & Locking Device
-MJ-	Gear Operator with Oversize Handwheel
-MK-	Gear Operator with Oversize Handwheel & Locking Device
-TC-	With Test Certificate
-TD-	Tested to API Spec 6D
-UL-	UL Listed
-ZP1-	Fugitive Emissions Packing (Viton)
-ZP2-	Fugitive Emissions Packing (Buna-N)
-ZP3-	Fugitive Emissions Packing (Kalrez)

Pressure/Temperature Ratings - Page M-23, Graph No. 31

DIMENSIONS

PART NO.	SIZE	A	B	C	D	E	F	G	H	I	J	K	L	M	WT.
88L-247-01	1-1/2"	1.50	6.50	3.00	4.62	6.65	0.72	2.41	3.09	1.949	0.974	0.625	0.412	5/16-18	14
88L-248-01	2"	2.00	7.00	3.04	5.61	8.41	0.80	3.31	4.08	1.949	0.974	0.750	0.477	5/16-18	25
88L-249-01	2-1/2"	2.50	7.50	3.34	6.24	8.41	0.80	3.94	4.71	1.949	0.974	0.750	0.477	5/16-18	30

REV. 18JUL19

aalberts integrated piping systems

88L-240 SERIES

LOW TEMP. CARBON STEEL ASME CLASS 150 FLANGED FULL PORT BALL VALVE
3" THRU 6"

5 YEAR WARRANTY MADE IN USA

FOR STANDARDS COMPLIANCE AND STANDARD FEATURES REFER TO PAGE D-3 AND RATED TO -50°F (-46°C).

STANDARD MATERIAL LIST

	PART	MATERIAL
1	Body	ASTM A352-LCC
2	Retainer	ASTM A352-LCC
3	Ball	ASTM A276-316 or A351-CF8M
4	Stem	ASTM A276-316
5	Packing Gland	ASTM A108 Type 1215
6	Stem Seals	PTFE
7	Seats	TFM 1700
8	Gland Screws	ASTM A193 B7
9	Gland Plate	316 Stainless Steel
10	Adapter Screw	316 Stainless Steel
11	Handle Adapter	ASTM A366 Steel with Vinyl Grip
12	Stem Bearing	RPTFE
13	Stop	ASTM A108 Type 1215
14	Stop Screw	SAE J429 Grade 2
15	Lock Plate	ASTM A366 Steel
16	Body Seal	RPTFE
17	Grounding Spring	Stainless Steel
18	Body Joint Stud	ASTM A193 Grade B7
19	Body Joint Nut	ASTM A194 Grade 2H
20	Pipe Handle	Galvanized Steel (not shown)

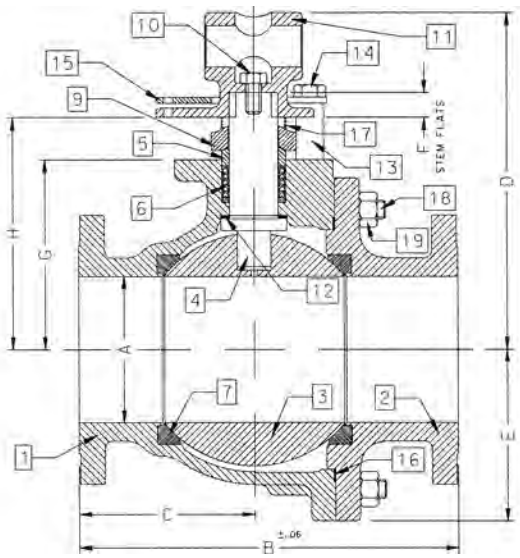

ACTUATOR MOUNTING

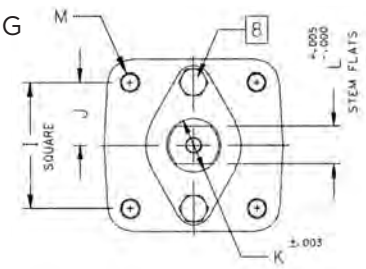

VARIATIONS AVAILABLE

- 88L-230 Series (Ni-Cu Ball & Stem)

OPTIONS AVAILABLE

(MORE INFORMATION IN SECTION J)

- Minimum quantities apply.
- To specify an option, replace the "01" standard suffix with the suffix of the option.
- To specify multiple options, replace the "01" suffix with the desired suffixes in the numerical order shown below. NOTE: Not all suffixes can be combined together.

(SUFFIX)	OPTION
-01	Standard Configuration
-14-	Side Vented Ball (Uni-Directional). Not Available with Plated CS Ball
-21-	UHMWPE Seats
-24-	Graphite Packing, Spiral Wound Graphite Body Seal, RPTFE Bearing (API 607, 6th Edition, ISO 10497:2010)
-26-	Chlorine Service. Vented. Special Cleaning. Assembled Dry. (for CS, Hastelloy and Ni-Cu Valves. Ball Must be Hastelloy or Ni-CU)
-35-	PTFE Seats and Seals
-38-	PEEK Seats and Graphite Packing
-49-	No Lubrication. Assembled Dry
-59-	Stainless Steel External Trim
-65-	MPTFE Seats and Graphite Packing (Fire Safe)
-67-	Cleaned for Industrial Gases
-69-	Drilled and Tapped Purge Port with Plug
-70-	4" Extended Bonnet
-73-	316 Stainless Steel Spiral Wound Gaskets with PTFE Filler
-76-	Live Loaded (Lever)
-77-	Live Loaded (Gear, Actuator)
-80-	TFM 1600 Seats, PTFE Chevron Packing, Spiral Wound PTFE Body Seal, PEEK Bearing
-82-	Flat Face Flanges
-90-	Double Packed 4" Extended Bonnet
-9P-	Double Packed 4" Extended Bonnet with Monitoring Port
-CE-	CE Marking. See Page D-3 "Product Approvals" for Availability
-EF-	Graphite Packing (API 641 Compliant)
-EP-	Garlock EVSP Stem Packing with Spiral Wound Graphite Gasket (Fire Safe by Design)
-KF-	PCTFE Stem Bearing
-MG-	Gear Operator with Standard Handwheel
-MH-	Gear Operator with Standard Handwheel & Locking Device
-MJ-	Gear Operator with Oversize Handwheel
-MK-	Gear Operator with Oversize Handwheel & Locking Device
-TC-	With Test Certificate
-TD-	Tested to API Spec 6D
-UL-	UL Listed
-ZP1-	Fugitive Emissions Packing (Viton)
-ZP2-	Fugitive Emissions Packing (Buna-N)
-ZP3-	Fugitive Emissions Packing (Kalrez)

Pressure/Temperature Ratings - Page M-23, Graph No. 31

DIMENSIONS

PART NO.	SIZE	A	B	C	D	E	F	G	H	I	J	K	L	M	WT.
88L-240-01	3"	3.00	8.00	3.68	8.80	3.88	0.50	4.75	5.95	2.840	1.420	1.250	0.725	3/8-16	60
88L-24A-01	4"	4.00	9.00	3.94	9.99	5.13	0.50	5.94	7.13	2.840	1.420	1.250	0.725	3/8-16	91
88L-24C-01	6"	6.00	15.50	7.19	13.73	7.00	1.00	7.75	9.48	4.596	2.298	2.000	1.375	3/4-10	248

REV. 18JUL19

88L-240 SERIES

LOW TEMP. CARBON STEEL ASME CLASS 150 FLANGED FULL PORT BALL VALVE
8" THRU 12"

5 YEAR WARRANTY MADE IN USA

FOR STANDARDS COMPLIANCE AND STANDARD FEATURES REFER TO PAGE D-3 AND RATED TO -50°F (-46°C).

STANDARD MATERIAL LIST

	PART	MATERIAL
1	Body	ASTM A352-LCC
2	Retainer	ASTM A352-LCC
3	Ball	ASTM A276-316 or A351-CF8M
4	Stem	ASTM A276-316
5	Packing Gland	ASTM A108 Type 1215
6	Stem Seals	PTFE
7	Seats	TFM 1700
8	Gland Screws	ASTM A193 B7
9	Gland Plate	316 Stainless Steel
10	Stem Bearing	RPTFE
11	Body Seal	RPTFE
12	Body Joint Stud	ASTM A193 Grade B7
13	Body Joint Nut	ASTM A194 Grade 2H

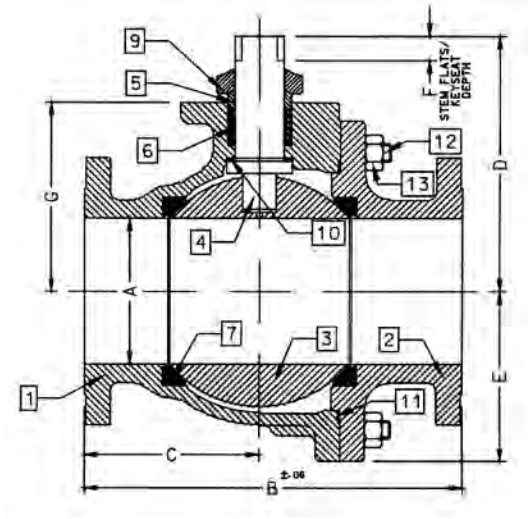

ACTUATOR MOUNTING

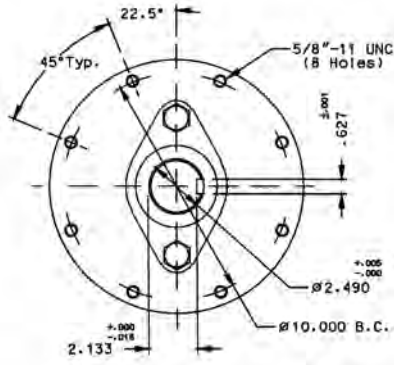

10" & 12"

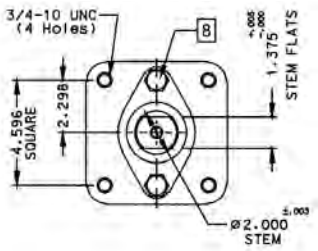

8"

VARIATIONS AVAILABLE

- 88L-230 Series (Ni-Cu Ball & Stem)

OPTIONS AVAILABLE

(MORE INFORMATION IN SECTION J)

- Minimum quantities apply.
- To specify an option, replace the "01" standard suffix with the suffix of the option.
- To specify multiple options, replace the "01" suffix with the desired suffixes in the numerical order shown below. NOTE: Not all suffixes can be combined together.

(SUFFIX)	OPTION
-01	Standard Configuration
-14-	Side Vented Ball (Uni-Directional). Not Available with Plated CS Ball
-21-	UHMWPE Seats
-24-	Graphite Packing, Spiral Wound Graphite Body Seal, RPTFE Bearing (API 607, 6th Edition, ISO 10497:2010)
-26-	Chlorine Service. Vented. Special Cleaning. Assembled Dry. (for CS, Hastelloy and Ni-Cu Valves. Ball Must be Hastelloy or Ni-CU)
-35-	PTFE Seats and Seals
-49-	No Lubrication. Assembled Dry
-65-	MPTFE Seats and Graphite Packing (Fire Safe)
-67-	Cleaned for Industrial Gas
-69-	Drilled and Tapped Purge Ports with Plugs
-70-	4" Extended Bonnet (8" Only)
-77-	Live Loaded (Gear, Actuator)
-80-	TFM 1600 Seats, PTFE Chevron Packing, Spiral Wound PTFE Body Seal, PEEK Bearing
-82-	Flat Face Flanges
-90-	Double Packed 4" Extended Bonnet
-9P-	Double Packed 4" Extended Bonnet with Monitoring Port
-CE-	CE Marking. See Page D-3 "Product Approvals" for Availability
-EF-	Graphite Packing (API 641 Compliant)
-EP-	Garlock EVSP Stem Packing with Spiral Wound Graphite Gasket (Fire Safe by Design)
-KF-	PCTFE Stem Bearing
-MG-	Gear Operator with Standard Handwheel
-MH-	Gear Operator with Standard Handwheel & Locking Device
-MJ-	Gear Operator with Oversize Handwheel
-MK-	Gear Operator with Oversize Handwheel & Locking Device
-TC-	With Test Certificate
-TD-	Tested to API Spec 6D
-UL-	UL Listed
-ZP1-	Fugitive Emissions Packing (Viton)
-ZP2-	Fugitive Emissions Packing (Buna-N)
-ZP3-	Fugitive Emissions Packing (Kalrez)

Pressure/Temperature Ratings - Page M-23, Graph No. 31

DIMENSIONS

PART NO.	SIZE	A	B	C	D	E	F	G
88L-24E-01	8"	8.00	18.00	8.88	12.83	9.18	1.00	10.22
88L-24G-01	10"	10.00	21.00	10.26	18.57	11.33	2.31	12.80
88L-24H-01	12"	12.00	24.00	12.09	20.31	13.40	2.31	14.92

REV. 18JUL19

aalberts integrated piping systems

88L-740 SERIES

LOW TEMP. CARBON STEEL ASME CLASS 300 FLANGED STD. PORT BALL VALVE
1-1/2" THRU 2"

5 YEAR WARRANTY MADE IN USA

FOR STANDARDS COMPLIANCE AND STANDARD FEATURES REFER TO PAGE D-3 AND RATED TO -50°F (-46°C).

STANDARD MATERIAL LIST

	PART	MATERIAL
1	Body	ASTM A352-LCC
2	Retainer	ASTM A352-LCC
3	Ball	ASTM A276-316
4	Stem	ASTM A276-316
5	Packing Gland	ASTM A108 Type 1215
6	Stem Seals	PTFE
7	Seats	TFM 1700
8	Gland Screws	ASTM A193 B7
9	Gland Plate	302 & 304 Stainless Steel
10	Stem Nut	316 Stainless Steel
11	Lever	ASTM A366 Steel with Vinyl Grip
12	Stem Bearing	RPTFE
13	Stop	ASTM A108 Type 1215
14	Stop Screw	SAE J429 Grade 2
15	Lock Plate	ASTM A366 Steel
16	Body Seal	RPTFE
17	Lockwasher	302 or 304 Stainless Steel
18	Grounding Spring	Stainless Steel

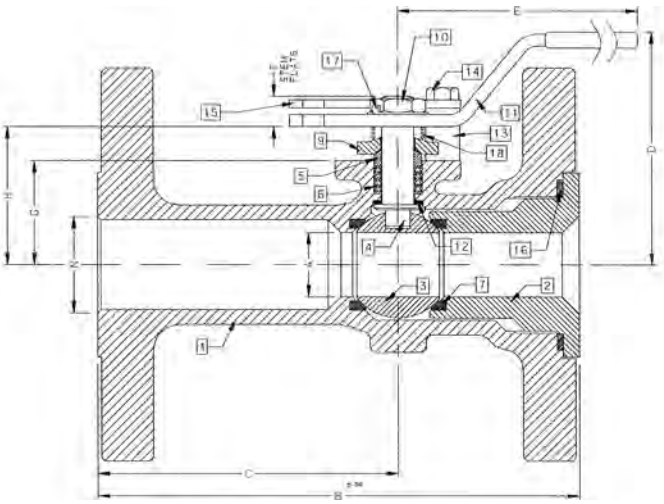

ACTUATOR MOUNTING

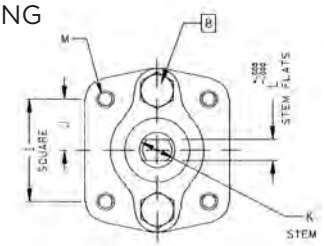

VARIATIONS AVAILABLE

- 88L-730 Series (Ni-Cu Ball & Stem)

OPTIONS AVAILABLE

(MORE INFORMATION IN SECTION J)

- Minimum quantities apply.
- To specify an option, replace the "01" standard suffix with the suffix of the option.
- To specify multiple options, replace the "01" suffix with the desired suffixes in the numerical order shown below. NOTE: Not all suffixes can be combined together.

(SUFFIX)	OPTION
-01	Standard Configuration
-04-	2-1/4" Stem Extension (Carbon Steel, Zinc Plated)
-10-	Stainless Steel Lever and Nut
-14-	Side Vented Ball (Uni-Directional). Not Available with Plated CS Ball
-15-	Wheel Handle, Steel
-21-	UHMWPE Seats
-24-	Graphite Packing, Spiral Wound Graphite Body Seal, RPTFE Bearing (API 607, 6th Edition, ISO 10497:2010)
-26-	Chlorine Service. Vented. Special Cleaning. Assembled Dry. (for CS, Hastelloy and Ni-Cu Valves. Ball Must be Hastelloy or Ni-CU)
-35-	PTFE Seats and Seals
-38-	PEEK Seats and Graphite Packing
-49-	No Lubrication. Assembled Dry
-65-	MPTFE Seats and Graphite Packing (Fire Safe)
-67-	Cleaned for Industrial Gases
-69-	Drilled and Tapped Purge Ports with Plugs
-70-	4" Extended Bonnet
-73-	316 Stainless Steel Spiral Wound Gaskets with PTFE Filler
-76-	Live Loaded (Lever)
-77-	Live Loaded (Gear, Actuator)
-80-	TFM 1600 Seats, PTFE Chevron Packing, Spiral Wound PTFE Body Seal, PEEK Bearing
-82-	Flat Face Flanges
-90-	Double Packed 4" Extended Bonnet
-9P-	Double Packed 4" Extended Bonnet with Monitoring Port
-CE-	CE Marking. See Page D-3 "Product Approvals" for Availability
-EF-	Graphite Packing (API 641 Compliant)
-EP-	Garlock EVSP Stem Packing with Spiral Wound Graphite Gasket (Fire Safe by Design)
-KF-	PCTFE Stem Bearing
-TC-	With Test Certificate
-TD-	Tested to API Spec 6D
-UL-	UL Listed
-ZP1-	Fugitive Emissions Packing (Viton)
-ZP2-	Fugitive Emissions Packing (Buna-N)
-ZP3-	Fugitive Emissions Packing (Kalrez)

Pressure/Temperature Ratings - Page M-23, Graph No. 32

DIMENSIONS

PART NO.	SIZE	A	B	C	D	E	F	G	H	I	J	K	L	M	N	WT.
88L-747-01	1-1/2"	1.25	7.50	4.50	4.85	6.53	0.47	1.85	2.38	1.392	0.696	0.500	0.287	1/4-20	1.50	16
88L-748-01	2"	1.50	8.50	5.19	4.62	6.65	0.72	2.41	3.09	1.949	0.974	0.625	0.412	5/16-18	2.00	24

REV. 18JUL19

88L-740 SERIES

LOW TEMP. CARBON STEEL ASME CLASS 300 FLANGED STD. PORT BALL VALVE
2-1/2" THRU 3"

5 YEAR WARRANTY MADE IN USA

FOR STANDARDS COMPLIANCE AND STANDARD FEATURES REFER TO PAGE D-3 AND RATED TO -50°F (-46°C).

STANDARD MATERIAL LIST

	PART	MATERIAL
1	Body	ASTM A352-LCC
2	Retainer	ASTM A352-LCC
3	Ball	ASTM A276-316 or A351-CF8M
4	Stem	ASTM A276-316
5	Packing Gland	ASTM A108 Type 1215
6	Stem Seals	PTFE
7	Seats	TFM 1700
8	Gland Screws	ASTM A193 B7
9	Gland Plate	302 or 304 Stainless Steel
10	Stem Nut	ASTM A194 Grade 8
11	Lever	ASTM A366 Steel with Vinyl Grip
12	Stem Bearing	RPTFE
13	Stop	ASTM A108 Type 1215
14	Stop Screw	SAE J429 Grade 2
15	Lock Plate	ASTM A366 Steel
16	Body Seal	RPTFE
17	Grounding Spring	Stainless Steel
18	Body Joint Stud	ASTM A193 Grade B7
19	Body Joint Nut	ASTM A194 Grade 2H
20	Lockwasher	302 or 304 Stainless Steel

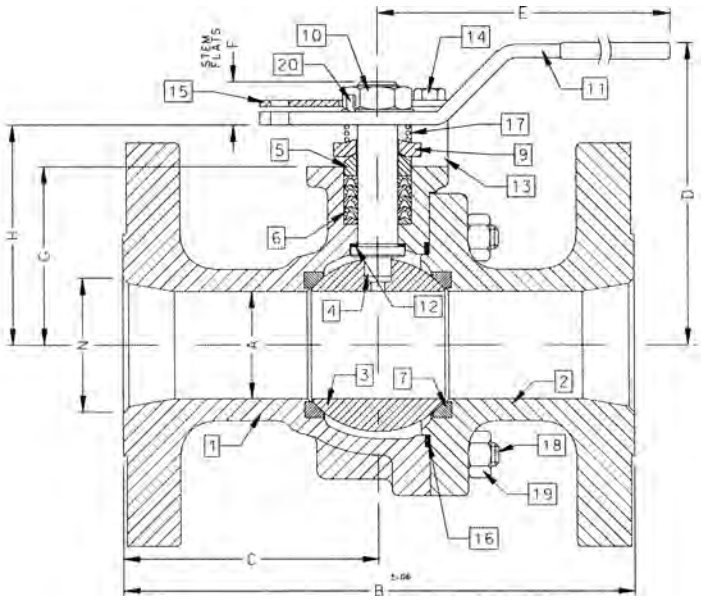

ACTUATOR MOUNTING

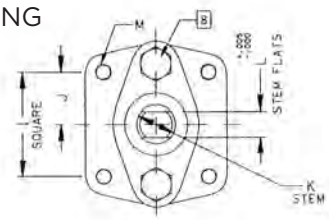

VARIATIONS AVAILABLE

- 88L-730 Series (Ni-Cu Ball & Stem)

OPTIONS AVAILABLE

(MORE INFORMATION IN SECTION J)

- Minimum quantities apply.
- To specify an option, replace the "01" standard suffix with the suffix of the option.
- To specify multiple options, replace the "01" suffix with the desired suffixes in the numerical order shown below. NOTE: Not all suffixes can be combined together.

(SUFFIX)	OPTION
-01	Standard Configuration
-04-	2-1/4" Stem Extension (Carbon Steel, Zinc Plated)
-10-	Stainless Steel Lever and Nut
-14-	Side Vented Ball (Uni-Directional). Not Available with Plated CS Ball
-15-	Wheel Handle, Steel
-21-	UHMWPE Seats
-24-	Graphite Packing, Spiral Wound Graphite Body Seal, RPTFE Bearing (API 607, 6th Edition, ISO 10497:2010)
-26-	Chlorine Service. Vented. Special Cleaning. Assembled Dry. (for CS, Hastelloy and Ni-Cu Valves. Ball Must be Hastelloy or Ni-CU)
-35-	PTFE Seats and Seals
-38-	PEEK Seats and Graphite Packing
-49-	No Lubrication. Assembled Dry
-59-	Stainless Steel External Trim
-65-	MPTFE Seats and Graphite Packing (Fire Safe)
-67-	Cleaned for Industrial Gases
-69-	Drilled and Tapped Purge Port with Plug
-70-	4" Extended Bonnet
-73-	316 Stainless Steel Spiral Wound Gaskets with PTFE Filler
-76-	Live Loaded (Lever)
-77-	Live Loaded (Gear, Actuator)
-80-	TFM 1600 Seats, PTFE Chevron Packing, Spiral Wound PTFE Body Seal, PEEK Bearing
-82-	Flat Face Flanges
-90-	Double Packed 4" Extended Bonnet
-9P-	Double Packed 4" Extended Bonnet with Monitoring Port
-CE-	CE Marking. See Page D-3 "Product Approvals" for Availability
-EF-	Graphite Packing (API 641 Compliant)
-EP-	Garlock EVSP Stem Packing with Spiral Wound Graphite Gasket (Fire Safe by Design)
-KF-	PCTFE Stem Bearing
-MG-	Gear Operator with Standard Handwheel
-MH-	Gear Operator with Standard Handwheel & Locking Device
-MJ-	Gear Operator with Oversize Handwheel
-MK-	Gear Operator with Oversize Handwheel & Locking Device
-TC-	With Test Certificate
-TD-	Tested to API Spec 6D
-UL-	UL Listed
-ZP1-	Fugitive Emissions Packing (Viton)
-ZP2-	Fugitive Emissions Packing (Buna-N)
-ZP3-	Fugitive Emissions Packing (Kalrez)

Pressure/Temperature Ratings - Page M-23, Graph No. 32

DIMENSIONS

PART NO.	SIZE	A	B	C	D	E	F	G	H	I	J	K	L	M	N	WT.
88L-749-01	2-1/2"	2.00	9.50	4.75	5.61	8.41	0.80	3.31	4.08	1.949	0.974	0.750	0.477	5/16-18	2.50	39
88L-740-01	3"	2.50	11.12	5.56	6.24	8.41	0.80	3.94	4.71	1.949	0.974	0.750	0.477	5/16-18	3.00	55

REV. 18JUL19

aalberts integrated piping systems

88L-740 SERIES

LOW TEMP. CARBON STEEL ASME CLASS 300 FLANGED STD. PORT BALL VALVE
4" THRU 8"

5 YEAR WARRANTY MADE IN USA

FOR STANDARDS COMPLIANCE AND STANDARD FEATURES REFER TO PAGE D-3 AND RATED TO -50°F (-46°C).

STANDARD MATERIAL LIST

	PART	MATERIAL
1	Body	ASTM A352-LCC
2	Retainer	ASTM A352-LCC
3	Ball	ASTM A276-316 or A351-CF8M
4	Stem	ASTM A276-316
5	Packing Gland	ASTM A108 Type 1215
6	Stem Seals	PTFE
7	Seats	TFM 1700
8	Gland Screws	ASTM A193 B7
9	Gland Plate	316 Stainless Steel
10	Adapter Screw	316 Stainless Steel
11	Handle Adapter	ASTM A366 Steel with Vinyl Grip
12	Stem Bearing	RPTFE
13	Stop	ASTM A108 Type 1215
14	Stop Screw	SAE J429 Grade 2
15	Lock Plate	ASTM A366 Steel
16	Body Seal	RPTFE
17	Grounding Spring	Stainless Steel
18	Body Joint Stud	ASTM A193 Grade B7
19	Body Joint Nut	ASTM A194 Grade 2H
20	Adapter Screw	316 Stainless Steel
21	Pipe Handle	Galvanized Steel (not shown)

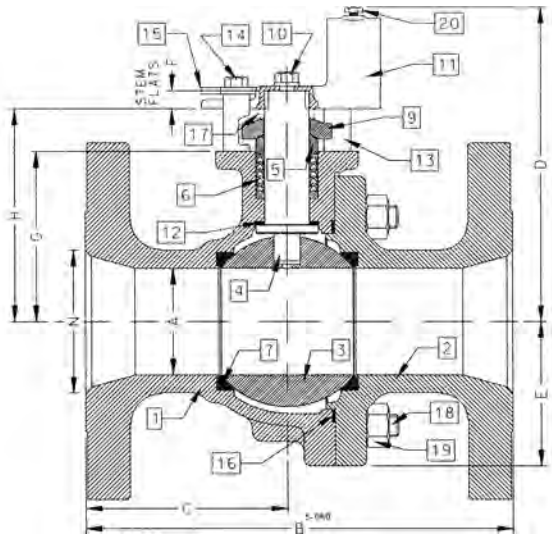

ACTUATOR MOUNTING

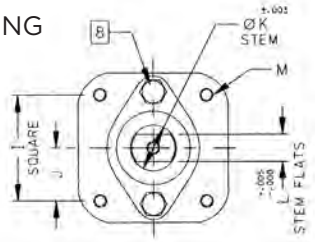

VARIATIONS AVAILABLE

- 88L-730 Series (Ni-Cu Ball & Stem)

OPTIONS AVAILABLE

(MORE INFORMATION IN SECTION J)

- Minimum quantities apply.
- To specify an option, replace the "01" standard suffix with the suffix of the option.
- To specify multiple options, replace the "01" suffix with the desired suffixes in the numerical order shown below. NOTE: Not all suffixes can be combined together.

(SUFFIX)	OPTION
-01	Standard Configuration
-14-	Side Vented Ball (Uni-Directional). Not Available with Plated CS Ball
-21-	UHMWPE Seats
-24-	Graphite Packing, Spiral Wound Graphite Body Seal, RPTFE Bearing (API 607, 6th Edition, ISO 10497:2010)
-26-	Chlorine Service. Vented. Special Cleaning. Assembled Dry. (for CS, Hastelloy and Ni-Cu Valves. Ball Must be Hastelloy or Ni-CU)
-35-	PTFE Seats and Seals
-49-	No Lubrication. Assembled Dry
-59-	Stainless Steel External Trim
-65-	MPTFE Seats and Graphite Packing (Fire Safe)
-67-	Cleaned for Industrial Gases
-69-	Drilled and Tapped Purge Ports with Plugs
-70-	4" Extended Bonnet
-73-	316 Stainless Steel Spiral Wound Gaskets with PTFE Filler
-76-	Live Loaded (Lever)
-77-	Live Loaded (Gear, Actuator)
-80-	TFM 1600 Seats, PTFE Chevron Packing, Spiral Wound PTFE Body Seal, PEEK Bearing
-82-	Flat Face Flanges
-90-	Double Packed 4" Extended Bonnet
-9P-	Double Packed 4" Extended Bonnet with Monitoring Port
-CE-	CE Marking. See Page D-3 "Product Approvals" for Availability
-EF-	Graphite Packing (API 641 Compliant)
-EP-	Garlock EVSP Stem Packing with Spiral Wound Graphite Gasket (Fire Safe by Design)
-KF-	PCTFE Stem Bearing
-MG-	Gear Operator with Standard Handwheel
-MH-	Gear Operator with Standard Handwheel & Locking Device
-MJ-	Gear Operator with Oversize Handwheel
-MK-	Gear Operator with Oversize Handwheel & Locking Device
-TC-	With Test Certificate
-TD-	Tested to API Spec 6D
-UL-	UL Listed
-ZP1-	Fugitive Emissions Packing (Viton)
-ZP2-	Fugitive Emissions Packing (Buna-N)
-ZP3-	Fugitive Emissions Packing (Kalrez)

Pressure/Temperature Ratings - Page M-23, Graph No. 32

DIMENSIONS

PART NO.	SIZE	A	B	C	D	E	F	G	H	I	J	K	L	M	N	WT.
88L-74A-01	4"	3.00	12.00	5.68	8.80	4.06	0.50	4.75	5.95	2.840	1.420	1.250	0.725	3/8-16	4.00	95
88L-74C-01	6"	4.00	15.88	7.38	9.99	5.25	0.50	5.94	7.13	2.840	1.420	1.250	0.725	3/8-16	6.00	187
88L-74E-01	8"	6.00	19.75	9.00	13.73	7.30	1.00	7.75	9.48	4.596	2.298	2.000	1.375	3/4-10	8.00	400

REV. 18JUL19

88L-740 SERIES

LOW TEMP. CARBON STEEL ASME CLASS 300 FLANGED STD. PORT BALL VALVE
10"

5 YEAR WARRANTY MADE IN USA

FOR STANDARDS COMPLIANCE AND STANDARD FEATURES REFER TO PAGE D-3 AND RATED TO -50°F (-46°C).

STANDARD MATERIAL LIST

	PART	MATERIAL
1	Body	ASTM A352-LCC
2	Retainer	ASTM A352-LCC
3	Ball	ASTM A276-316 or A351-CF8M
4	Stem	ASTM A276-316
5	Packing Gland	ASTM A108 Type 1215
6	Stem Seals	PTFE
7	Seats	TFM 1700
8	Gland Screws	ASTM A193 B7
9	Gland Plate	316 Stainless Steel
10	Stem Bearing	RPTFE
11	Body Seal	RPTFE
12	Body Joint Stud	ASTM A193 Grade B7
13	Body Joint Nut	ASTM A194 Grade 2H

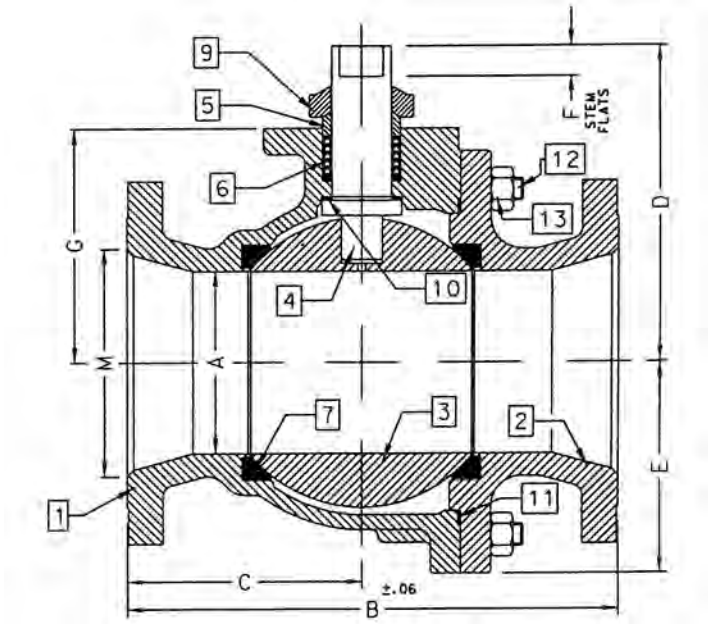

ACTUATOR MOUNTING

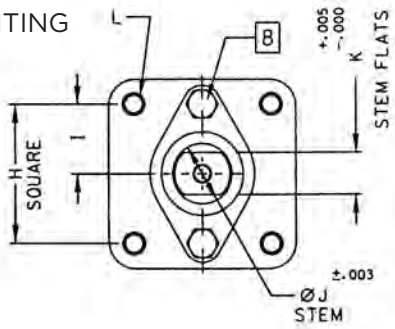

VARIATIONS AVAILABLE

- 88L-730 Series (Ni-Cu Ball & Stem)

OPTIONS AVAILABLE

(MORE INFORMATION IN SECTION J)

- Minimum quantities apply.
- To specify an option, replace the "01" standard suffix with the suffix of the option.
- To specify multiple options, replace the "01" suffix with the desired suffixes in the numerical order shown below. NOTE: Not all suffixes can be combined together.

(SUFFIX)	OPTION
-01	Standard Configuration
-14-	Side Vented Ball (Uni-Directional). Not Available with Plated CS Ball
-21-	UHMWPE Seats
-24-	Graphite Packing, Spiral Wound Graphite Body Seal, RPTFE Bearing (API 607, 6th Edition, ISO 10497:2010)
-26-	Chlorine Service. Vented. Special Cleaning. Assembled Dry. (for CS, Hastelloy and Ni-Cu Valves. Ball Must be Hastelloy or Ni-CU)
-35-	PTFE Seats and Seals
-49-	No Lubrication. Assembled Dry
-57-	Oxygen Cleaned
-65-	MPTFE Seats and Graphite Packing (Fire Safe)
-67-	Cleaned for Industrial Gases
-69-	Drilled and Tapped Purge Port with Plugs
-70-	4" Extended Bonnet
-77-	Live Loaded (Gear, Actuator)
-80-	TFM 1600 Seats, PTFE Chevron Packing, Spiral Wound PTFE Body Seal, PEEK Bearing
-82-	Flat Face Flanges
-90-	Double Packed 4" Extended Bonnet
-9P-	Double Packed 4" Extended Bonnet with Monitoring Port
-CE-	CE Marking. See Page D-3 "Product Approvals" for Availability
-EF-	Graphite Packing (API 641 Compliant)
-EP-	Garlock EVSP Stem Packing with Spiral Wound Graphite Gasket (Fire Safe by Design)
-KF-	PCTFE Stem Bearing
-MG-	Gear Operator with Standard Handwheel
-MH-	Gear Operator with Standard Handwheel & Locking Device
-MJ-	Gear Operator with Oversize Handwheel
-MK-	Gear Operator with Oversize Handwheel & Locking Device
-TC-	With Test Certificate
-TD-	Tested to API Spec 6D
-UL-	UL Listed
-ZP1-	Fugitive Emissions Packing (Viton)
-ZP2-	Fugitive Emissions Packing (Buna-N)
-ZP3-	Fugitive Emissions Packing (Kalrez)

Pressure/Temperature Ratings - Page M-23, Graph No. 32

DIMENSIONS

PART NO.	SIZE	A	B	C	D	E	F	G	H	I	J	K	L	M
88L-74G-01	10"	8.00	22.38	10.69	12.83	9.56	1.00	10.22	4.596	2.298	2.000	1.375	3/4-10	10.00

REV. 18JUL19

aalberts integrated piping systems

88L-940 SERIES

LOW TEMP. CARBON STEEL ASME CLASS 300 FLANGED FULL PORT BALL VALVE
1/2" THRU 1"

5 YEAR WARRANTY MADE IN USA

FOR STANDARDS COMPLIANCE AND STANDARD FEATURES REFER TO PAGE D-3 AND RATED TO -50°F (-46°C).

STANDARD MATERIAL LIST

	PART	MATERIAL
1	Body	ASTM A352-LCC
2	Retainer	ASTM A352-LCC
3	Ball	ASTM A276-316
4	Stem	ASTM A276-316
5	Packing Gland	ASTM A108 Type 1215
6	Stem Seals	PTFE
7	Seats	TFM 1700
8	Gland Screws	ASTM A193 B7
9	Gland Plate	302 or 304 Stainless Steel
10	Stem Nut	316 Stainless Steel
11	Lever	ASTM A366 Steel with Vinyl Grip
12	Stem Bearing	RPTFE
13	Stop	ASTM A108 Type 1215
14	Stop Screw	SAE J429 Grade 2
15	Lock Plate	ASTM A366 Steel
16	Body Seal	RPTFE
17	Lockwasher	302 or 304 Stainless Steel
18	Grounding Spring	Stainless Steel

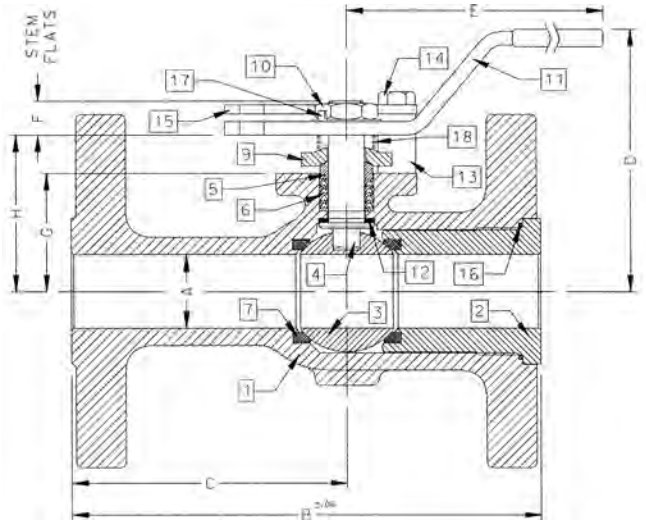

ACTUATOR MOUNTING

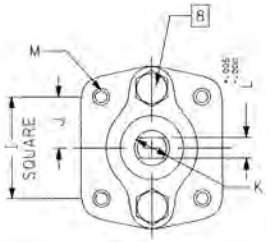

VARIATIONS AVAILABLE

- 88L-930 Series (Ni-Cu Ball & Stem)

OPTIONS AVAILABLE

(MORE INFORMATION IN SECTION J)

- Minimum quantities apply.
- To specify an option, replace the "01" standard suffix with the suffix of the option.
- To specify multiple options, replace the "01" suffix with the desired suffixes in the numerical order shown below. NOTE: Not all suffixes can be combined together.

(SUFFIX)	OPTION
-01	Standard Configuration
-04-	2-1/4" Stem Extension (Carbon Steel, Zinc Plated)
-10-	Stainless Steel Lever and Nut
-14-	Side Vented Ball (Uni-Directional). Not Available with Plated CS Ball
-15-	Wheel Handle, Steel
-21-	UHMWPE Seats
-24-	Graphite Packing, Spiral Wound Graphite Body Seal, RPTFE Bearing (API 607, 6th Edition, ISO 10497:2010)
-26-	Chlorine Service. Vented. Special Cleaning. Assembled Dry. (for CS, Hastelloy and Ni-Cu Valves. Ball Must be Hastelloy or Ni-CU)
-35-	PTFE Seats and Seals
-38-	PEEK Seats and Graphite Packing
-49-	No Lubrication. Assembled Dry
-65-	MPTFE Seats and Graphite Packing (Fire Safe)
-67-	Cleaned for Industrial Gases
-69-	Drilled and Tapped Purge Port with Plug
-70-	4" Extended Bonnet
-73-	316 Stainless Steel Spiral Wound Gaskets with PTFE Filler
-76-	Live Loaded (Lever)
-77-	Live Loaded(Gear, Actuated)
-80-	TFM 1600 Seats, PTFE Chevron Packing, Spiral Wound PTFE Body Seal, PEEK Bearing
-82-	Flat Face Flanges
-90-	Double Packed 4" Extended Bonnet
-9P-	Double Packed 4" Extended Bonnet with Monitoring Port
-CE-	CE Marking. See Page D-3 "Product Approvals" for Availability
-EF-	Graphite Packing (API 641 Compliant) (Not Available on 1/2" Size)
-EP-	Garlock EVSP Stem Packing with Spiral Wound Graphite Gasket (Fire Safe by Design)
-KF-	PCTFE Stem Bearing
-TC-	With Test Certificate
-TD-	Tested to API Spec 6D
-UL-	UL Listed
-ZP1-	Fugitive Emissions Packing (Viton)
-ZP2-	Fugitive Emissions Packing (Buna-N)
-ZP3-	Fugitive Emissions Packing (Kalrez)

Pressure/Temperature Ratings - Page M-23, Graph No. 32

DIMENSIONS

PART NO.	SIZE	A	B	C	D	E	F	G	H	I	J	K	L	M	WT.
88L-943-01A	1/2"	0.50	5.50	3.31	2.74	5.12	0.24	1.09	1.44	1.000	0.500	0.375	0.245	10-24	7.0
88L-944-01A	3/4"	0.75	6.00	3.56	3.43	5.54	0.22	1.65	2.13	1.392	0.696	0.500	0.287	1/4-20	9.0
88L-945-01	1"	1.00	6.50	3.82	4.62	6.53	0.47	1.62	2.15	1.392	0.696	0.500	0.287	1/4-20	10.5

REV. 10SEP19

88L-940 SERIES

LOW TEMP. CARBON STEEL ASME CLASS 300 FLANGED FULL PORT BALL VALVE
1-1/2" THRU 2-1/2"

5 YEAR WARRANTY MADE IN USA

FOR STANDARDS COMPLIANCE AND STANDARD FEATURES REFER TO PAGE D-3 AND RATED TO -50°F (-46°C).

STANDARD MATERIAL LIST

	PART	MATERIAL
1	Body	ASTM A352-LCC
2	Retainer	ASTM A352-LCC
3	Ball	ASTM A276-316 or A351-CF8M
4	Stem	ASTM A276-316
5	Packing Gland	ASTM A108 Type 1215
6	Stem Seals	PTFE
7	Seats	TFM 1700
8	Gland Screws	ASTM A193 B7
9	Gland Plate	302 & 304 Stainless Steel
10	Stem Nut	ASTM A194 Grade 8I
11	Lever	ASTM A366 Steel with Vinyl Grip
12	Stem Bearing	RPTFE
13	Stop	ASTM A108 Type 1215
14	Stop Screw	SAE J429 Grade 2
15	Lock Plate	ASTM A366 Steel
16	Body Seal	RPTFE
17	Grounding Spring	Stainless Steel
18	Body Joint Stud	ASTM A193 Grade B7
19	Body Joint Nut	ASTM A194 Grade 2H
20	Lockwasher	302 or 304 Stainless Steel

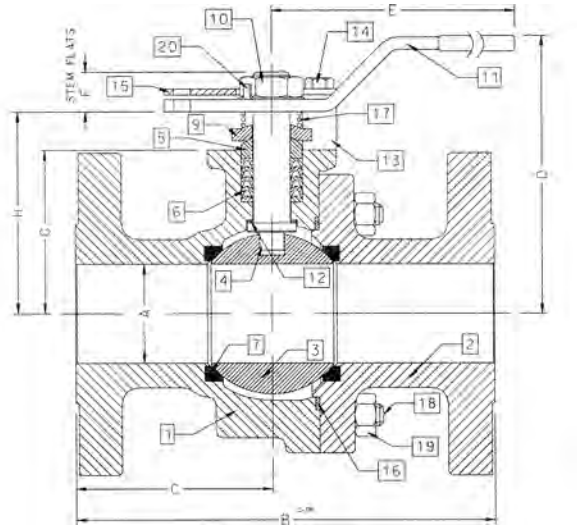

ACTUATOR MOUNTING

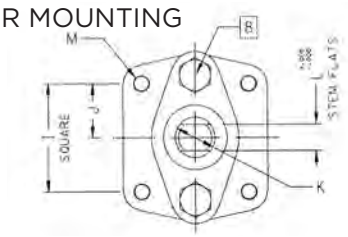

VARIATIONS AVAILABLE

- 88L-930 Series (Ni-Cu Ball & Stem)

OPTIONS AVAILABLE

(MORE INFORMATION IN SECTION J)

- Minimum quantities apply.
- To specify an option, replace the "01" standard suffix with the suffix of the option.
- To specify multiple options, replace the "01" suffix with the desired suffixes in the numerical order shown below. NOTE: Not all suffixes can be combined together.

(SUFFIX)	OPTION
-01	Standard Configuration
-04-	2-1/4" Stem Extension (Carbon Steel, Zinc Plated) (up to 2")
-14-	Side Vented Ball (Uni-Directional). Not Available with Plated CS Ball
-15-	Wheel Handle, Steel
-21-	UHMWPE Seats
-24-	Graphite Packing, Spiral Wound Graphite Body Seal, RPTFE Bearing (API 607, 6th Edition, ISO 10497:2010)
-26-	Chlorine Service. Vented. Special Cleaning. Assembled Dry. (for CS, Hastelloy and Ni-Cu Valves. Ball Must be Hastelloy or Ni-CU)
-35-	PTFE Seats and Seals
-38-	PEEK Seats and Graphite Packing
-49-	No Lubrication. Assembled Dry
-59-	Stainless Steel External Trim
-65-	MPTFE Seats and Graphite Packing (Fire Safe)
-67-	Cleaned for Industrial Gases
-69-	Drilled and Tapped Purge Ports with Plugs
-70-	4" Extended Bonnet
-73-	316 Stainless Steel Spiral Wound Gaskets with PTFE Filler
-76-	Live Loaded (Lever)
-77-	Live Loaded (Gear, Actuator)
-80-	TFM 1600 Seats, PTFE Chevron Packing, Spiral Wound PTFE Body Seal, PEEK Bearing
-82-	Flat Face Flanges
-90-	Double Packed 4" Extended Bonnet
-9P-	Double Packed 4" Extended Bonnet with Monitoring Port
-CE-	CE Marking. See Page D-3 "Product Approvals" for Availability
-EF-	Graphite Packing (API 641 Compliant)
-EP-	Garlock EVSP Stem Packing with Spiral Wound Graphite Gasket (Fire Safe by Design)
-KF-	PCTFE Stem Bearing
-MG-	Gear Operator with Standard Handwheel
-MH-	Gear Operator with Standard Handwheel & Locking Device
-MJ-	Gear Operator with Oversize Handwheel
-MK-	Gear Operator with Oversize Handwheel & Locking Device
-TC-	With Test Certificate
-TD-	Tested to API Spec 6D
-UL-	UL Listed
-ZP1-	Fugitive Emissions Packing (Viton)
-ZP2-	Fugitive Emissions Packing (Buna-N)
-ZP3-	Fugitive Emissions Packing (Kalrez)

Pressure/Temperature Ratings - Page M-23, Graph No. 32

DIMENSIONS

PART NO.	SIZE	A	B	C	D	E	F	G	H	I	J	K	L	M	WT.
88L-947-01	1-1/2"	1.50	7.50	3.50	4.62	6.65	0.72	2.41	3.09	1.949	0.974	0.625	0.412	5/16-18	21
88L-948-01	2"	2.00	8.50	4.00	5.61	8.41	0.80	3.31	4.08	1.949	0.974	0.750	0.477	5/16-18	37
88L-949-01	2-1/2"	2.50	9.50	4.44	6.24	8.41	0.80	3.94	4.71	1.949	0.974	0.750	0.477	5/16-18	57

REV. 18JUL19

aalberts integrated piping systems

88L-940 SERIES

LOW TEMP. CARBON STEEL ASME CLASS 300 FLANGED FULL PORT BALL VALVE
3" THRU 6"

5 YEAR WARRANTY MADE IN USA

FOR STANDARDS COMPLIANCE AND STANDARD FEATURES REFER TO PAGE D-3 AND RATED TO -50°F (-46°C).

STANDARD MATERIAL LIST

	PART	MATERIAL
1	Body	ASTM A352-LCC
2	Retainer	ASTM A352-LCC
3	Ball	ASTM A276-316 or A351-CF8M
4	Stem	ASTM A276-316
5	Packing Gland	ASTM A108 Type 1215
6	Stem Seals	PTFE
7	Seats	TFM 1700
8	Gland Screws	ASTM A193 B7
9	Gland Plate	316 Stainless Steel
10	Adapter Screw	316 Stainless Steel
11	Handle Adapter	ASTM A366 Steel with Vinyl Grip
12	Stem Bearing	RPTFE
13	Stop	ASTM A108 Type 1215
14	Stop Screw	SAE J429 Grade 2
15	Lock Plate	ASTM A366 Steel
16	Body Seal	RPTFE
17	Grounding Spring	Stainless Steel
18	Body Joint Stud	ASTM A193 Grade B7
19	Body Joint Nut	ASTM A194 Grade 2H
20	Pipe Handle	Galvanized Steel (not shown)

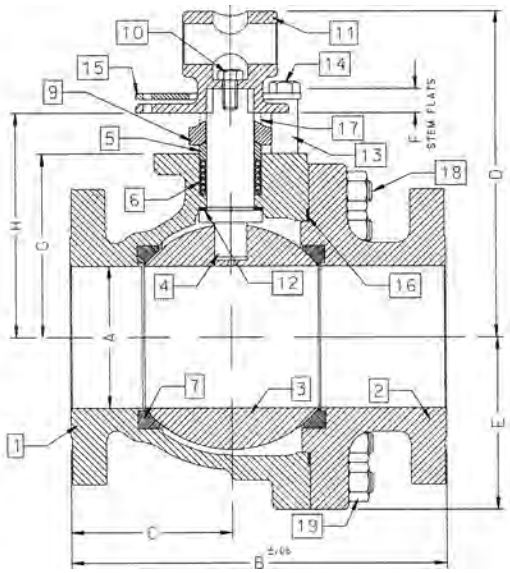

ACTUATOR MOUNTING

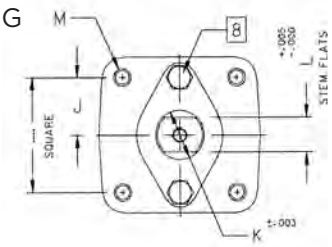

VARIATIONS AVAILABLE

- 88L-930 Series (Ni-Cu Ball & Stem)

OPTIONS AVAILABLE

(MORE INFORMATION IN SECTION J)

- Minimum quantities apply.
- To specify an option, replace the "01" standard suffix with the suffix of the option.
- To specify multiple options, replace the "01" suffix with the desired suffixes in the numerical order shown below. NOTE: Not all suffixes can be combined together.

(SUFFIX)	OPTION
-01	Standard Configuration
-14-	Side Vented Ball (Uni-Directional). Not Available with Plated CS Ball
-21-	UHMWPE Seats
-24-	Graphite Packing, Spiral Wound Graphite Body Seal, RPTFE Bearing (API 607, 6th Edition, ISO 10497:2010)
-26-	Chlorine Service. Vented. Special Cleaning. Assembled Dry. (for CS, Hastelloy and Ni-Cu Valves. Ball Must be Hastelloy or Ni-CU)
-35-	PTFE Seats and Seals
-38-	PEEK Seats and Graphite Packing
-49-	No Lubrication. Assembled Dry
-59-	Stainless Steel External Trim
-65-	MPTFE Seats and Graphite Packing (Fire Safe)
-67-	Cleaned for Industrial Gases
-69-	Drilled and Tapped Purge Ports with Plugs
-70-	4" Extended Bonnet
-73-	316 Stainless Steel Spiral Wound Gaskets with PTFE Filler
-76-	Live Loaded (Lever)
-77-	Live Loaded (Gear, Actuator)
-80-	TFM 1600 Seats, PTFE Chevron Packing, Spiral Wound PTFE Body Seal, PEEK Bearing
-82-	Flat Face Flanges
-90-	Double Packed 4" Extended Bonnet
-9P-	Double Packed 4" Extended Bonnet with Monitoring Port
-CE-	CE Marking. See Page D-3 "Product Approvals" for Availability
-EF-	Graphite Packing (API 641 Compliant)
-EP-	Garlock EVSP Stem Packing with Spiral Wound Graphite Gasket (Fire Safe by Design)
-KF-	PCTFE Stem Bearing
-MG-	Gear Operator with Standard Handwheel
-MH-	Gear Operator with Standard Handwheel & Locking Device
-MJ-	Gear Operator with Oversize Handwheel
-MK-	Gear Operator with Oversize Handwheel & Locking Device
-TC-	With Test Certificate
-TD-	Tested to API Spec 6D
-UL-	UL Listed
-ZP1-	Fugitive Emissions Packing (Viton)
-ZP2-	Fugitive Emissions Packing (Buna-N)
-ZP3-	Fugitive Emissions Packing (Kalrez)

Pressure/Temperature Ratings - Page M-23, Graph No. 32

DIMENSIONS

PART NO.	SIZE	A	B	C	D	E	F	G	H	I	J	K	L	M	WT.
88L-940-01	3"	3.00	11.12	5.24	8.80	4.06	0.50	4.75	5.95	2.840	1.420	1.250	0.725	3/8-16	78
88L-94A-01	4"	4.00	12.00	5.44	9.99	5.25	0.50	5.94	7.13	2.840	1.420	1.250	0.725	3/8-16	133
88L-94C-01	6"	6.00	15.88	6.82	13.73	7.30	1.00	7.75	9.48	4.596	2.296	2.000	1.375	3/4-10	329

REV. 18JUL19

88L-940 SERIES

LOW TEMP. CARBON STEEL ASME CLASS 300 FLANGED FULL PORT BALL VALVE
8" THRU 12"

5 YR WARRANTY MADE IN USA

FOR STANDARDS COMPLIANCE AND STANDARD FEATURES REFER TO PAGE D-3 AND RATED TO -50°F (-46°C).

STANDARD MATERIAL LIST

	PART	MATERIAL
1	Body	ASTM A352-LCC
2	Retainer	ASTM A352-LCC
3	Ball	ASTM A351-CF8M
4	Stem	ASTM A276-316
5	Packing Gland	ASTM A108 Type 1215
6	Stem Seals	PTFE
7	Seats	TFM 1700
8	Gland Screws	ASTM A193 B7
9	Gland Plate	316 Stainless Steel
10	Stem Bearing	RPTFE
11	Body Seal	RPTFE
12	Body Joint Stud	ASTM A193 Grade B7
13	Body Joint Nut	ASTM A194 Grade 2H

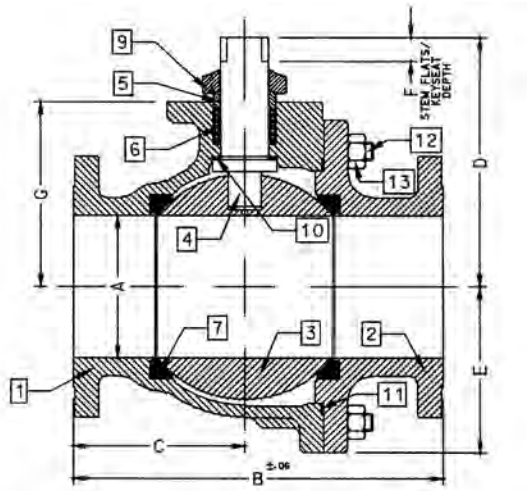

ACTUATOR MOUNTING

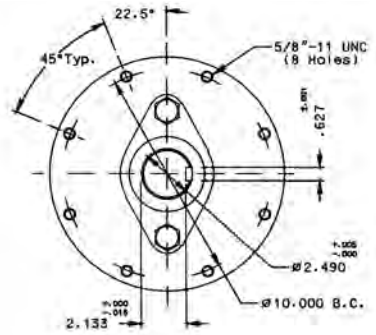

10" & 12"

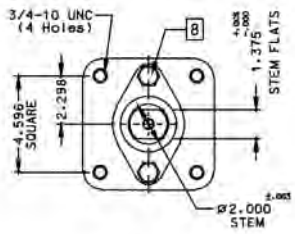

8"

VARIATIONS AVAILABLE

- 88L-930 Series (Ni-Cu Ball & Stem)

OPTIONS AVAILABLE

(MORE INFORMATION IN SECTION J)

- Minimum quantities apply.
- To specify an option, replace the "01" standard suffix with the suffix of the option.
- To specify multiple options, replace the "01" suffix with the desired suffixes in the numerical order shown below. NOTE: Not all suffixes can be combined together.

(SUFFIX)	OPTION
-01	Standard Configuration
-14-	Side Vented Ball (Uni-Directional). Not Available with Plated CS Ball
-21-	UHMWPE Seats
-24-	Graphite Packing, Spiral Wound Graphite Body Seal, RPTFE Bearing (API 607, 6th Edition, ISO 10497:2010)
-26-	Chlorine Service. Vented. Special Cleaning. Assembled Dry. (for CS, Hastelloy and Ni-Cu Valves. Ball Must be Hastelloy or Ni-CU)
-35-	PTFE Seats and Seals
-49-	No Lubrication. Assembled Dry
-65-	MPTFE Seats and Graphite Packing (Fire Safe)
-67-	Cleaned for Industrial Gas
-69-	Drilled and Tapped Purge Ports with Plugs
-70-	4" Extended Bonnet (8" Only)
-76-	Live Loaded (Lever)
-77-	Live Loaded (Gear, Actuator)
-80-	TFM 1600 Seats, PTFE Chevron Packing, Spiral Wound PTFE Body Seal, PEEK Bearing
-82-	Flat Face Flanges
-90-	Double Packed 4" Extended Bonnet
-9P-	Double Packed 4" Extended Bonnet with Monitoring Port
-CE-	CE Marking. See Page D-3 "Product Approvals" for Availability
-EF-	Graphite Packing (API 641 Compliant)
-EP-	Garlock EVSP Stem Packing with Spiral Wound Graphite Gasket (Fire Safe by Design)
-KF-	PCTFE Stem Bearing
-MG-	Gear Operator with Standard Handwheel
-MH-	Gear Operator with Standard Handwheel & Locking Device
-MJ-	Gear Operator with Oversize Handwheel
-MK-	Gear Operator with Oversize Handwheel & Locking Device
-TC-	With Test Certificate
-TD-	Tested to API Spec 6D
-UL-	UL Listed
-ZP1-	Fugitive Emissions Packing (Viton)
-ZP2-	Fugitive Emissions Packing (Buna-N)
-ZP3-	Fugitive Emissions Packing (Kalrez)

Pressure/Temperature Ratings - Page M-23, Graph No. 32

DIMENSIONS

PART NO.	SIZE	A	B	C	D	E	F	G
88L-94E-01	8"	8.00	19.75	9.38	12.83	9.56	1.00	10.22
88L-94G-01	10"	10.00	22.38	10.95	18.57	11.33	2.31	12.80
88L-94H-01	12"	12.00	25.50	12.84	20.31	13.40	2.31	14.92

REV. 18JUL19

aalberts integrated piping systems

87A-400 SERIES

ALLOY 20 ASME CLASS 150 FLANGED STD. PORT BALL VALVE
1-1/2" THRU 2"

5 YEAR WARRANTY MADE IN USA

FOR STANDARDS COMPLIANCE AND STANDARD FEATURES REFER TO PAGE D-3 AND RATED TO -50°F (-46°C).

STANDARD MATERIAL LIST

	PART	MATERIAL
1	Body	ASTM A351 CN7M
2	Retainer	ASTM B473 (UNS N08020)
3	Ball	ASTM B473 (UNS N08020)
4	Stem	ASTM B473 (UNS N08020)
5	Packing Gland	ASTM A276 Type 316
6	Stem Seals	PTFE
7	Seats	TFM 1700
8	Gland Screws	ASTM A193 B8 Class 1
9	Gland Plate	302 or 304 Stainless Steel
10	Stem Nut	316 Stainless Steel
11	Lever	302 or 304 Stainless Steel with Vinyl Grip
12	Stem Bearing	RPTFE
13	Stop	ASTM A276 Type 316
14	Stop Screw	18-8 Stainless Steel
15	Lock Plate	302 or 304 Stainless Steel
16	Body Seal	RPTFE
17	Lockwasher	302 or 304 Stainless Steel
18	Grounding Spring	Stainless Steel
19	Grounding Spring	Inconel (not shown)

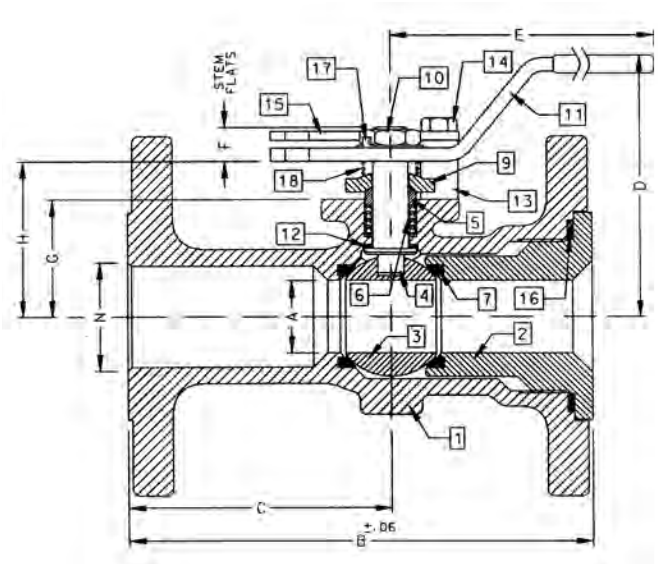

ACTUATOR MOUNTING

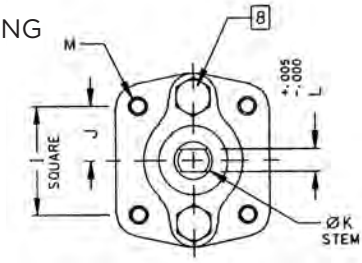

OPTIONS AVAILABLE

(MORE INFORMATION IN SECTION J)

- Minimum quantities apply.
- To specify an option, replace the "01" standard suffix with the suffix of the option.
- To specify multiple options, replace the "01" suffix with the desired suffixes in the numerical order shown below. NOTE: Not all suffixes can be combined together.

(SUFFIX)	OPTION
-01	Standard Configuration
-04-	2-1/4" Stem Extension (Carbon Steel, Zinc Plated)
-14-	Side Vented Ball (Uni-Directional)
-15-	Wheel Handle, Steel
-21-	UHMWPE Seats
-24-	Fire Safe (Graphite Packing and Seal)
-35-	PTFE Seats and Seals
-38-	PEEK Seats and Graphite Packing
-49-	No Lubrication. Assembled Dry
-57-	Oxygen Cleaned
-65-	MPTFE Seats and Graphite Packing (Fire Safe)
-69-	Drilled and Tapped Purge Port with Plug
-70-	4" Extended Bonnet
-76-	Live Loaded (Lever)
-77-	Live Loaded (Gear, Actuator)
-80-	TFM 1600 Seats, PTFE Chevron Packing, Spiral Wound PTFE Body Seal, PEEK Bearing
-82-	Flat Face Flanges
-90-	Double Packed 4" Extended Bonnet
-9P-	Double Packed 4" Extended Bonnet with Monitoring Port
-CE-	CE Marking. See Page D-3 "Product Approvals" for Availability
-EF-	Graphite Packing (API 641 Compliant)
-EP-	Garlock EVSP Stem Packing with Spiral Wound Graphite Gasket (Fire Safe by Design)
-KF-	PCTFE Stem Bearing
-PM-	Positive Material Identification
-TC-	With Test Certificate
-MG-	Gear Operator with Standard Handwheel
-MH-	Gear Operator with Standard Handwheel & Locking Device
-MJ-	Gear Operator with Oversize Handwheel
-MK-	Gear Operator with Oversize Handwheel & Locking Device
-TD-	Tested to API Spec 6D
-ZP1-	Fugitive Emissions Packing (Viton)
-ZP2-	Fugitive Emissions Packing (Buna-N)
-ZP3-	Fugitive Emissions Packing (Kalrez)

Pressure/Temperature Ratings - Page M-16, Graph No. 18

DIMENSIONS

PART NO.	SIZE	A	B	C	D	E	F	G	H	I	J	K	L	M	N	WT.
87A-407-01A	1-1/2"	1.00	6.50	3.50	4.85	6.53	0.47	1.85	2.38	1.392	0.696	0.500	0.287	1/4-20	1.50	9
87A-408-01	2"	1.50	7.00	3.69	4.62	6.65	0.72	2.41	3.09	1.949	0.974	0.625	0.412	5/16-18	2.00	18

REV. 18JUL19

87A-400 SERIES

ALLOY 20 ASME CLASS 150 FLANGED STD. PORT BALL VALVE
3”

5 YEAR WARRANTY MADE IN USA

FOR STANDARDS COMPLIANCE AND STANDARD FEATURES REFER TO PAGE D-3.

STANDARD MATERIAL LIST

	PART	MATERIAL
1	Body	ASTM A351 CN7M
2	Retainer	ASTM A351 CN7M
3	Ball	ASTM B473 (UNS N08020) or CN7M
4	Stem	ASTM B473 (UNS N08020)
5	Packing Gland	ASTM A276 Type 316
6	Stem Seals	PTFE
7	Seats	TFM 1700
8	Gland Screws	ASTM A193 B8 Class 1
9	Gland Plate	316 Stainless Steel
10	Stem Nut	18-8 Stainless Steel
11	Lever	316 Stainless Steel with Vinyl Grip
12	Stem Bearing	RPTFE
13	Stop	ASTM A276 Type 316
14	Stop Screw	316 Stainless Steel
15	Lock Plate	302 or 304 Stainless Steel
16	Body Seal	RPTFE
17	Grounding Spring	Stainless Steel
18	Body Joint Stud	ASTM A193 Grade B8M
19	Body Joint Nut	ASTM A194 Grade 8
20	Lockwasher	302 or 304 Stainless Steel
21	Grounding Spring	Inconel (not shown)

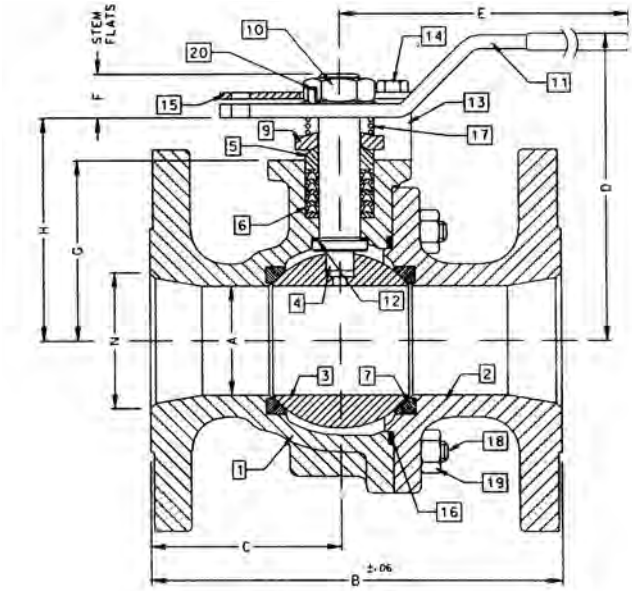

ACTUATOR MOUNTING

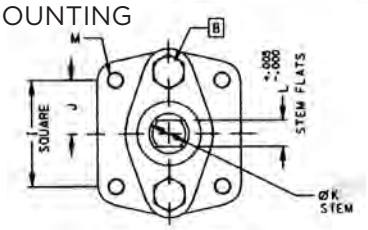

OPTIONS AVAILABLE

(MORE INFORMATION IN SECTION J)

- Minimum quantities apply.
- To specify an option, replace the “01” standard suffix with the suffix of the option.
- To specify multiple options, replace the “01” suffix with the desired suffixes in the numerical order shown below. NOTE: Not all suffixes can be combined together.

(SUFFIX)	OPTION
-01	Standard Configuration
-04-	2-1/4” Stem Extension (Carbon Steel, Zinc Plated)
-14-	Side Vented Ball (Uni-Directional)
-21-	UHMWPE Seats
-24-	Fire Safe (Graphite Packing and Seal)
-35-	PTFE Seats and Seals
-38-	PEEK Seats and Graphite Packing
-49-	No Lubrication. Assembled Dry
-57-	Oxygen Cleaned
-65-	MPTFE Seats and Graphite Packing (Fire Safe)
-69-	Drilled and Tapped Purge Ports with Plugs
-70-	4” Extended Bonnet
-76-	Live Loaded (Lever)
-77-	Live Loaded (Gear, Actuator)
-80-	TFM 1600 Seats, PTFE Chevron Packing, Spiral Wound PTFE Body Seal, PEEK Bearing
-82-	Flat Face Flanges
-90-	Double Packed 4” Extended Bonnet
-9P-	Double Packed 4” Extended Bonnet with Monitoring Port
-CE-	CE Marking. See Page D-3 “Product Approvals” for Availability
-EF-	Graphite Packing (API 641 Compliant)
-EP-	Garlock EVSP Stem Packing with Spiral Wound Graphite Gasket (Fire Safe by Design)
-KF-	PCTFE Stem Bearing
-MG-	Gear Operator with Standard Handwheel
-MH-	Gear Operator with Standard Handwheel & Locking Device
-MJ-	Gear Operator with Oversize Handwheel
-MK-	Gear Operator with Oversize Handwheel & Locking Device
-MP-	Positive Material Identification
-TC-	With Test Certificate
-TD-	Tested to API Spec 6D
-ZP1-	Fugitive Emissions Packing (Viton)
-ZP2-	Fugitive Emissions Packing (Buna-N)
-ZP3-	Fugitive Emissions Packing (Kalrez)

Pressure/Temperature Ratings - Page M-16, Graph No. 18

DIMENSIONS

PART NO.	SIZE	A	B	C	D	E	F	G	H	I	J	K	L	M	N	WT.
87A-400-01	3”	2.50	8.00	3.51	6.24	8.41	0.80	3.94	4.71	1.949	0.974	0.750	0.477	5/16-18	3.00	34.3

REV. 18JUL19

aalberts integrated piping systems

87A-400 SERIES

ALLOY 20 ASME CLASS 150 FLANGED STD. PORT BALL VALVE
4" THRU 8"

5 YEAR WARRANTY MADE IN USA

FOR STANDARDS COMPLIANCE AND STANDARD FEATURES REFER TO PAGE D-3.

STANDARD MATERIAL LIST

	PART	MATERIAL
1	Body	ASTM A351 CN7M
2	Retainer	ASTM A351 CN7M
3	Ball	ASTM B473 (UNS N08020) or CN7M
4	Stem	ASTM B473 (UNS N08020)
5	Packing Gland	ASTM A276 Type 316
6	Stem Seals	PTFE
7	Seats	TFM 1700
8	Gland Screws	ASTM A193 B8 Class 1
9	Gland Plate	316 Stainless Steel
10	Adapter Screw	18-8 Stainless Steel
11	Handle Adapter	316 Stainless Steel with Vinyl Grip
12	Stem Bearing	RPTFE
13	Stop	ASTM A276 Type 316
14	Stop Screw	316 Stainless Steel
15	Lock Plate	302 or 304 Stainless Steel
16	Body Seal	RPTFE
17	Grounding Spring	Stainless Steel
18	Body Joint Stud	ASTM A193 Grade B8M
19	Body Joint Nut	ASTM A194 Grade 8
20	Adapter Screw	18-8 Stainless Steel
21	Pipe Handle	Galvanized Steel (not shown)
22	Grounding Spring	Inconel (not shown)

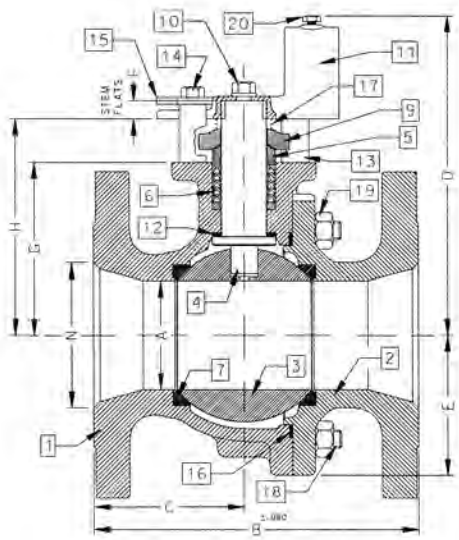

ACTUATOR MOUNTING

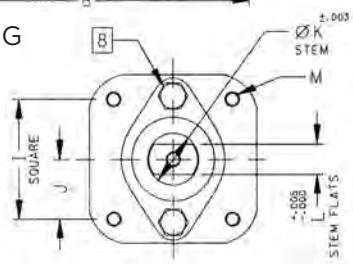

OPTIONS AVAILABLE

(MORE INFORMATION IN SECTION J)

- Minimum quantities apply.
- To specify an option, replace the "01" standard suffix with the suffix of the option.
- To specify multiple options, replace the "01" suffix with the desired suffixes in the numerical order shown below. NOTE: Not all suffixes can be combined together.

(SUFFIX)	OPTION
-01	Standard Configuration
-14-	Side Vented Ball (Uni-Directional)
-21-	UHMWPE Seats
-24-	Fire Safe (Graphite Packing and Seal)
-35-	PTFE Seats and Seals
-49-	No Lubrication. Assembled Dry
-57-	Oxygen Cleaned
-65-	MPTFE Seats and Graphite Packing (Fire Safe)
-69-	Drilled and Tapped Purge Ports with Plugs
-70-	4" Extended Bonnet
-76-	Live Loaded (Lever)
-77-	Live Loaded (Gear, Actuator)
-80-	TFM 1600 Seats, PTFE Chevron Packing, Spiral Wound PTFE Body Seal, PEEK Bearing
-82-	Flat Face Flanges
-90-	Double Packed 4" Extended Bonnet
-9P-	Double Packed 4" Extended Bonnet with Monitoring Port
-CE-	CE Marking. See Page D-3 "Product Approvals" for Availability
-EF-	Graphite Packing (API 641 Compliant)
-EP-	Garlock EVSP Stem Packing with Spiral Wound Graphite Gasket (Fire Safe by Design)
-KF-	PCTFE Stem Bearing
-MG-	Gear Operator with Standard Handwheel
-MH-	Gear Operator with Standard Handwheel & Locking Device
-MJ-	Gear Operator with Oversize Handwheel
-MK-	Gear Operator with Oversize Handwheel & Locking Device
-MP-	Positive Material Identification
-TC-	With Test Certificate
-TD-	Tested to API Spec 6D
-ZP1-	Fugitive Emissions Packing (Viton)
-ZP2-	Fugitive Emissions Packing (Buna-N)
-ZP3-	Fugitive Emissions Packing (Kalrez)

Pressure/Temperature Ratings - Page M-16, Graph No. 18

DIMENSIONS

PART NO.	SIZE	A	B	C	D	E	F	G	H	I	J	K	L	M	N	WT.
87A-40A-01	4"	3.00	9.00	4.18	8.80	3.88	0.50	4.75	5.95	2.840	1.420	1.250	0.725	3/8-16	4.00	73
87A-40C-01	6"	4.00	10.50	4.69	9.99	5.13	.50	5.94	7.13	2.840	1.420	1.250	0.725	3/8-16	6.00	117
87A-40E-01	8"	6.00	18.00	9.00	13.73	7.00	1.00	7.75	9.48	4.596	2.298	2.000	1.375	3/4-10	8.00	310

REV. 18JUL19

87A-500 SERIES

ALLOY 20 ASME CLASS 150 FLANGED FULL.. PORT BALL VALVE
1/2" THRU 1"

5 YEAR WARRANTY MADE IN USA

FOR STANDARDS COMPLIANCE AND STANDARD FEATURES REFER TO PAGE D-3.

STANDARD MATERIAL LIST

	PART	MATERIAL
1	Body	ASTM A351 CN7M
2	Retainer	ASTM B473 (UNS N08020)
3	Ball	ASTM B473 (UNS N08020)
4	Stem	ASTM B473 (UNS N08020)
5	Packing Gland	ASTM A276 Type 316
6	Stem Seals	PTFE
7	Seats	TFM 1700
8	Gland Screws	ASTM A193 B8 Class 1
9	Gland Plate	302 or 304 Stainless Steel
10	Stem Nut	316 Stainless Steel
11	Lever	302 or 304 with Vinyl Grip
12	Stem Bearing	RPTFE
13	Stop	ASTM A276 Type 316
14	Stop Screw	18-8 Stainless Steel
15	Lock Plate	302 or 304 Stainless Steel
16	Body Seal	RPTFE
17	Lockwasher	302 or 304 Stainless Steel
18	Grounding Spring	Stainless Steel
19	Grounding Spring	Inconel (not shown)

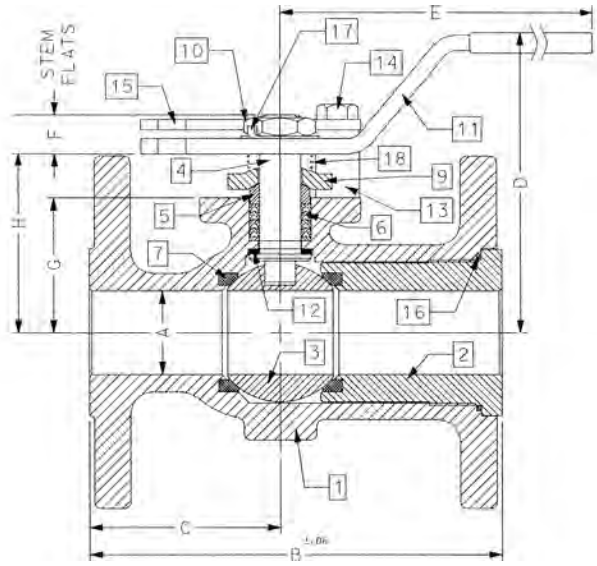

OPTIONS AVAILABLE

(MORE INFORMATION IN SECTION J)

- Minimum quantities apply.
- To specify an option, replace the "01" standard suffix with the suffix of the option.
- To specify multiple options, replace the "01" suffix with the desired suffixes in the numerical order shown below. NOTE: Not all suffixes can be combined together.

(SUFFIX)	OPTION
-01	Standard Configuration
-04-	2-1/4" Stem Extension (Carbon Steel, Zinc Plated)
-14-	Side Vented Ball (Uni-Directional)
-15-	Wheel Handle, Steel
-21-	UHMWPE Seats
-24-	Fire Safe (Graphite Packing and Seal)
-35-	PTFE Seats and Seals
-38-	PEEK Seats and Graphite Packing
-49-	No Lubrication. Assembled Dry
-57-	Oxygen Cleaned
-65-	MPTFE Seats and Graphite Packing (Fire Safe)
-69-	Drilled and Tapped Purge Port with Plugs
-70-	4" Extended Bonnet
-73-	Alloy 20 Spiral Wound Gaskets with PTFE Filler
-74-	Alloy 20 Spiral Wound Gaskets with Graphite Filler
-76-	Live Loaded (Lever)
-77-	Live Loaded (Gear, Actuator)
-80-	TFM 1600 Seats, PTFE Chevron Packing, Spiral Wound PTFE Body Seal, PEEK Bearing
-82-	Flat Face Flanges
-90-	Double Packed 4" Extended Bonnet
-9P-	Double Packed 4" Extended Bonnet with Monitoring Port
-CE-	CE Marking. See Page D-3 "Product Approvals" for Availability
-EF-	Graphite Packing (API 641 Compliant) (Not Available on 1/2" Size)
-EP-	Garlock EVSP Stem Packing with Spiral Wound Graphite Gasket (Fire Safe by Design)
-KF-	PCTFE Stem Bearing
-MP-	Positive Material Identification
-TC-	With Test Certificate
-TD-	Tested to API Spec 6D
-ZP1-	Fugitive Emissions Packing (Viton)
-ZP2-	Fugitive Emissions Packing (Buna-N)
-ZP3-	Fugitive Emissions Packing (Kalrez)

Pressure/Temperature Ratings - Page M-16, Graph No. 18

ACTUATOR MOUNTING

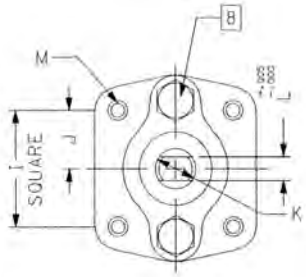

DIMENSIONS

PART NO.	SIZE	A	B	C	D	E	F	G	H	I	J	K	L	M	WT.
87A-503-01A	1/2"	0.50	4.25	2.06	2.74	5.12	0.24	1.09	1.44	1.000	0.500	0.375	0.245	10-24	5
87A-504-01A	3/4"	0.75	4.62	2.18	3.43	5.54	0.22	1.65	2.13	1.392	0.696	0.500	0.287	1/4-20	6
87A-505-01	1"	1.00	5.00	2.32	4.62	6.53	0.47	1.62	2.15	1.392	0.696	0.500	0.287	1/4-20	7

REV. 10SEP19

aalberts integrated piping systems

87A-500 SERIES

ALLOY 20 ASME CLASS 150 FLANGED FULL PORT BALL VALVE
1-1/2" THRU 2-1/2"

5 YEAR WARRANTY MADE IN USA

FOR STANDARDS COMPLIANCE AND STANDARD FEATURES REFER TO PAGE D-3.

STANDARD MATERIAL LIST

	PART	MATERIAL
1	Body	ASTM A351 CN7M
2	Retainer	ASTM A351 CN7M
3	Ball	ASTM B473 (UNS N08020) or A351 CN7M
4	Stem	ASTM B473 (UNS N08020)
5	Packing Gland	ASTM A276 Type 316
6	Stem Seals	PTFE
7	Seats	TFM 1700
8	Gland Screws	ASTM A193 B8 Class 1
9	Gland Plate	316 Stainless Steel
10	Adapter Screw	18-8 Stainless Steel
11	Lever	316 Stainless Steel
12	Stem Bearing	RPTFE
13	Stop	ASTM A276 Type 316
14	Stop Screw	316 Stainless Steel
15	Lock Plate	302 or 304 Stainless Steel
16	Body Seal	RPTFE
17	Grounding Spring	Stainless Steel
18	Body Joint Stud	ASTM A193 Grade B8M
19	Body Joint Nut	ASTM A194 Grade 8
20	Lockwasher	302 or 304 Stainless Steel
21	Grounding Spring	Inconel (not shown)

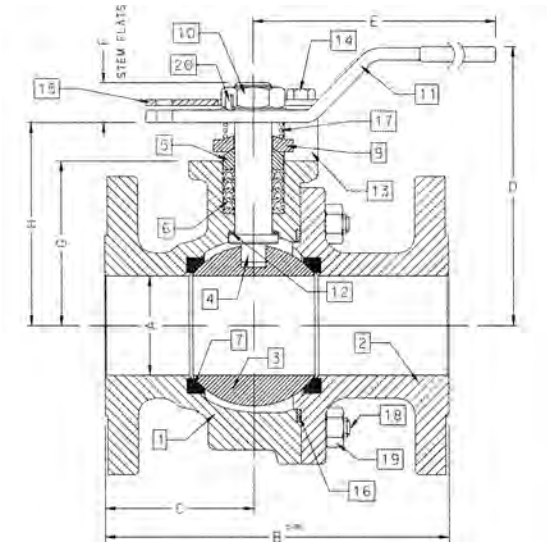

ACTUATOR MOUNTING

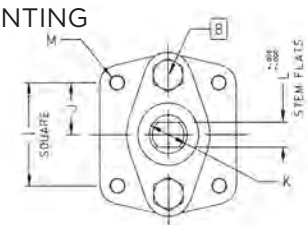

OPTIONS AVAILABLE

(MORE INFORMATION IN SECTION J)

- Minimum quantities apply.
- To specify an option, replace the "01" standard suffix with the suffix of the option.
- To specify multiple options, replace the "01" suffix with the desired suffixes in the numerical order shown below. NOTE: Not all suffixes can be combined together.

(SUFFIX)	OPTION
-01	Standard Configuration
-04-	2-1/4" Stem Extension (Carbon Steel, Zinc Plated)
-14-	Side Vented Ball (Uni-Directional)
-21-	UHMWPE Seats
-24-	Fire Safe (Graphite Packing and Seal)
-35-	PTFE Seats and Seals
-38-	PEEK Seats and Graphite Packing (3" Only)
-49-	No Lubrication. Assembled Dry
-57-	Oxygen Cleaned
-65-	MPTFE Seats and Graphite Packing (Fire Safe)
-69-	Drilled and Tapped Purge Ports with Plugs
-70-	4" Extended Bonnet
-73-	Alloy 20 Spiral Wound Gaskets with PTFE Filler
-74-	Alloy 20 Spiral Wound Gaskets with Graphite Filler
-76-	Live Loaded (Lever)
-77-	Live Loaded (Gear, Actuator)
-80-	TFM 1600 Seats, PTFE Chevron Packing, Spiral Wound PTFE Body Seal, PEEK Bearing
-82-	Flat Face Flanges
-90-	Double Packed 4" Extended Bonnet
-9P-	Double Packed 4" Extended Bonnet with Monitoring Port
-CE-	CE Marking. See Page D-3 "Product Approvals" for Availability
-EF-	Graphite Packing (API 641 Compliant)
-EP-	Garlock EVSP Stem Packing with Spiral Wound Graphite Gasket (Fire Safe by Design)
-KF-	PCTFE Stem Bearing
-MG-	Gear Operator with Standard Handwheel
-MH-	Gear Operator with Standard Handwheel & Locking Device
-MJ-	Gear Operator with Oversize Handwheel
-MK-	Gear Operator with Oversize Handwheel & Locking Device
-MP-	Positive Material Identification
-TC-	With Test Certificate
-TD-	Tested to API Spec 6D
-ZP1-	Fugitive Emissions Packing (Viton)
-ZP2-	Fugitive Emissions Packing (Buna-N)
-ZP3-	Fugitive Emissions Packing (Kalrez)

Pressure/Temperature Ratings - Page M-16, Graph No. 18

DIMENSIONS

PART NO.	SIZE	A	B	C	D	E	F	G	H	I	J	K	L	M	WT.
87A-507-01	1-1/2"	1.50	6.50	3.00	4.62	6.65	0.72	2.41	3.09	1.949	0.974	0.625	0.412	5/16-18	14
87A-508-01	2"	2.00	7.00	3.04	5.61	8.41	0.80	3.31	4.08	1.949	0.974	0.750	0.477	5/16-18	25
87A-509-01	2-1/2"	2.50	7.50	3.34	6.24	8.41	0.80	3.94	4.71	1.949	0.974	0.750	0.477	5/16-18	30

REV. 08JUL19

87A-500 SERIES

ALLOY 20 ASME CLASS 150 FLANGED FULL PORT BALL VALVE
3" THRU 6"

5 YEAR WARRANTY MADE IN USA

FOR STANDARDS COMPLIANCE AND STANDARD FEATURES REFER TO PAGE D-3.

STANDARD MATERIAL LIST

	PART	MATERIAL
1	Body	ASTM A351 CN7M
2	Retainer	ASTM A351 CN7M
3	Ball	ASTM B473 (UNS N08020 or A351 CN7M)
4	Stem	ASTM B473 (UNS N08020)
5	Packing Gland	ASTM A276 Type 316
6	Stem Seals	PTFE
7	Seats	TFM 1700
8	Gland Screws	ASTM A193 B8 Class 1
9	Gland Plate	316 Stainless Steel
10	Adapter Screw	18-8 Stainless Steel
11	Handle Adapter	316 with Vinyl Grip
12	Stem Bearing	RPTFE
13	Stop	ASTM A276 Type 316
14	Stop Screw	316 Stainless Steel
15	Lock Plate	302 or 304 Stainless Steel
16	Body Seal	RPTFE
17	Grounding Spring	Stainless Steel
18	Body Joint Stud	ASTM A193 Grade B8M
19	Body Joint Nut	ASTM A194 Grade 8
20	Pipe Handle	Galvanized Steel (not shown)
21	Grounding Spring	Inconel (not shown)

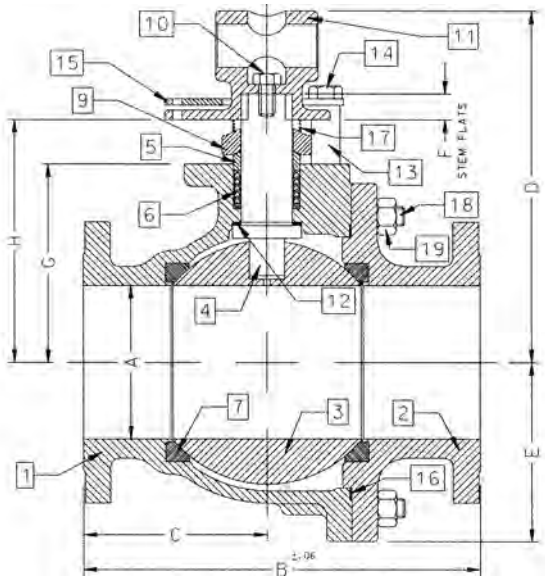

ACTUATOR MOUNTING

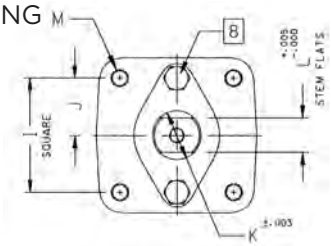

OPTIONS AVAILABLE

(MORE INFORMATION IN SECTION J)

- Minimum quantities apply.
- To specify an option, replace the "01" standard suffix with the suffix of the option.
- To specify multiple options, replace the "01" suffix with the desired suffixes in the numerical order shown below. NOTE: Not all suffixes can be combined together.

(SUFFIX)	OPTION
-01	Standard Configuration
-14-	Side Vented Ball (Uni-Directional)
-21-	UHMWPE Seats
-24-	Fire Safe (Graphite Packing and Seal)
-35-	PTFE Seats and Seals
-38-	PEEK Seats and Graphite Packing
-49-	No Lubrication. Assembled Dry
-57-	Oxygen Cleaned
-65-	MPTFE Seats and Graphite Packing (Fire Safe)
-69-	Drilled and Tapped Purge Ports with Plugs
-70-	Extended Bonnet
-73-	Alloy 20 Spiral Wound Gaskets with PTFE Filler
-74-	Alloy 20 Spiral Wound Gaskets with Graphite Filler
-76-	Live Loaded (Lever)
-77-	Live Loaded (Gear, Actuator)
-80-	TFM 1600 Seats, PTFE Chevron Packing, Spiral Wound PTFE Body Seal, PEEK Bearing
-82-	Flat Face Flanges
-90-	Double Packed 4" Extended Bonnet
-9P-	Double Packed 4" Extended Bonnet with Monitoring Port
-CE-	CE Marking. See Page D-3 "Product Approvals" for Availability
-EF-	Graphite Packing (API 641 Compliant)
-EP-	Garlock EVSP Stem Packing with Spiral Wound Graphite Gasket (Fire Safe by Design)
-KF-	PCTFE Stem Bearing
-MG-	Gear Operator with Standard Handwheel
-MH-	Gear Operator with Standard Handwheel & Locking Device
-MJ-	Gear Operator with Oversize Handwheel
-MK-	Gear Operator with Oversize Handwheel & Locking Device
-MP-	Positive Material Identification
-TC-	With Test Certificate
-TD-	Tested to API Spec 6D
-ZP1-	Fugitive Emissions Packing (Viton)
-ZP2-	Fugitive Emissions Packing (Buna-N)
-ZP3-	Fugitive Emissions Packing (Kalrez)

Pressure/Temperature Ratings - Page M-16, Graph No. 18

DIMENSIONS

PART NO.	SIZE	A	B	C	D	E	F	G	H	I	J	K	L	M	WT.
87A-500-01	3"	3.00	8.00	3.68	8.80	3.88	0.50	4.75	5.95	2.840	1.420	1.250	0.725	3/8-16	60
87A-50A-01	4"	4.00	9.00	3.94	9.99	5.13	0.50	5.94	7.13	2.840	1.420	1.250	0.725	3/8-16	91
87A-50C-01	6"	6.00	15.50	7.19	13.73	7.00	1.00	7.75	9.48	4.596	2.298	2.000	1.375	3/4-10	248

REV. 08JUL19

aalberts integrated piping systems

87H-100 SERIES

HASTELLOY C ASME CLASS 150 FLANGED STD. PORT BALL VALVE
1-1/2" THRU 2"

5 YEAR WARRANTY MADE IN USA

FOR STANDARDS COMPLIANCE AND STANDARD FEATURES REFER TO PAGE D-3.

STANDARD MATERIAL LIST

	PART	MATERIAL
1	Body	ASTM A494-CW12MW
2	Retainer	ASTM A494-CW12MW
3	Ball	ASTM B574-C276
4	Stem	ASTM B574-C276
5	Packing Gland	ASTM B574-C276
6	Stem Seals	PTFE
7	Seats	TFM 1700
8	Gland Screws	ASTM A193 B8 Class 1
9	Gland Plate	302 or 304 Stainless Steel
10	Stem Nut	316 Stainless Steel
11	Lever	302 or 304 Stainless Steel with Vinyl Grip
12	Stem Bearing	RPTFE
13	Stop	ASTM A276 Type 316
14	Stop Screw	18-8 Stainless Steel
15	Lock Plate	302 or 304 Stainless Steel
16	Body Seal	RPTFE
17	Lockwasher	302 or 304 Stainless Steel
18	Grounding Spring	Hastelloy C

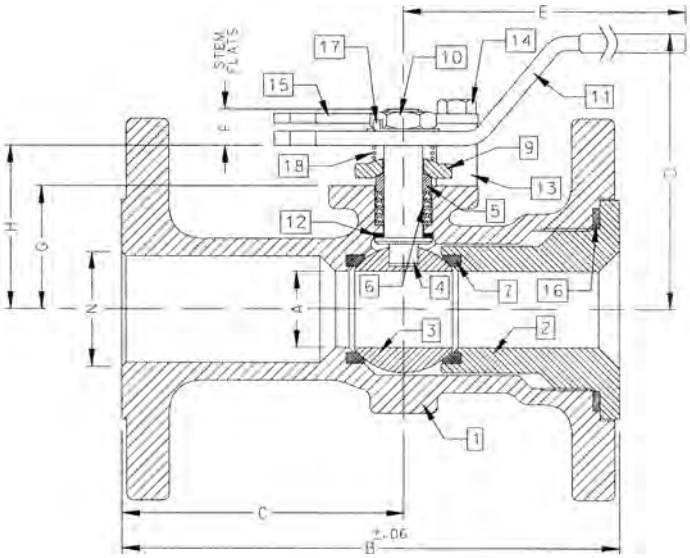

ACTUATOR MOUNTING

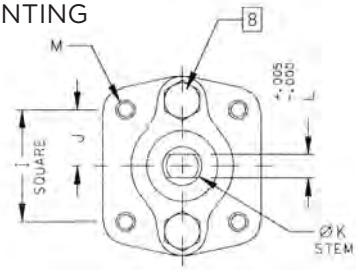

OPTIONS AVAILABLE

(MORE INFORMATION IN SECTION J)

- Minimum quantities apply.
- To specify an option, replace the "01" standard suffix with the suffix of the option.
- To specify multiple options, replace the "01" suffix with the desired suffixes in the numerical order shown below. NOTE: Not all suffixes can be combined together.

(SUFFIX)	OPTION
-01	Standard Configuration
-04-	2-1/4" Stem Extension (Carbon Steel, Zinc Plated)
-14-	Side Vented Ball (Uni-Directional)
-15-	Wheel Handle, Steel
-21-	UHMWPE Seats
-24-	Graphite Packing, Spiral Wound Graphite Body Seal, RPTFE Bearing (API 607, 6th Edition, ISO 10497:2010)
-35-	PTFE Seats and Seals
-38-	PEEK Seats and Graphite Packing
-49-	No Lubrication. Assembled Dry
-57-	Oxygen Cleaned
-65-	MPTFE Seats and Graphite Packing (Fire Safe)
-69-	Drilled and Tapped Purge Port with Plug
-70-	4" Extended Bonnet
-73-	316 Stainless Steel Spiral Wound Gaskets with PTFE Filler
-76-	Live Loaded (Lever)
-77-	Live Loaded (Gear, Actuator)
-80-	TFM 1600 Seats, PTFE Chevron Packing, Spiral Wound PTFE Body Seal PEEK Bearing
-82-	Flat Face Flanges
-90-	Double Packed 4" Extended Bonnet
-9P-	Double Packed 4" Extended Bonnet with Monitoring Port
-CE-	CE Marking. See Page D-3 "Product Approvals" for Availability
-EF-	Graphite Packing (API 641 Compliant)
-EP-	Garlock EVSP Stem Packing with Spiral Wound Graphite Gasket (Fire Safe by Design)
-KF-	PCTFE Stem Bearing
-MP-	Positive Material Identification
-TC-	With Test Certificate
-TD-	Tested to API Spec 6D
-UA-	AIS (American Iron & Steel) Compliant
-UL-	UL & CSA Listed (with Markings)
-ZP1-	Fugitive Emissions Packing (Viton)
-ZP2-	Fugitive Emissions Packing (Buna-N)
-ZP3-	Fugitive Emissions Packing (Kalrez)

Pressure/Temperature Ratings - Page M-32, Graph No. 48

DIMENSIONS

PART NO.	SIZE	A	B	C	D	E	F	G	H	I	J	K	L	M	N	WT.
87H-107-01	1-1/2"	1.25	6.50	3.50	4.85	6.53	0.47	1.85	2.38	1.392	0.696	0.500	0.287	1/4-20	1.50	9
87H-108-01	2"	1.50	7.00	3.69	4.62	6.65	0.72	2.41	3.09	1.949	0.974	0.625	0.412	5/16-18	2.00	18

87H-100 SERIES

HASTELLOY C ASME CLASS 150 FLANGED STD. PORT BALL VALVE
2-1/2" THRU 3"

5 YEAR WARRANTY MADE IN USA

FOR STANDARDS COMPLIANCE AND STANDARD FEATURES REFER TO PAGE D-3.

STANDARD MATERIAL LIST

	PART	MATERIAL
1	Body	ASTM A494-CW12MW
2	Retainer	ASTM A494-CW12MW
3	Ball	ASTM B574-C276
4	Stem	ASTM B574-C276
5	Packing Gland	ASTM B574-C276
6	Stem Seals	PTFE
7	Seats	TFM 1700
8	Gland Screws	ASTM A193 B8 Class 1
9	Gland Plate	316 Stainless Steel
10	Stem Nut	18-8 Stainless Steel
11	Lever	316 Stainless Steel
12	Stem Bearing	RPTFE
13	Stop	ASTM A276 Type 316
14	Stop Screw	316 Stainless Steel
15	Lock Plate	302 or 304 Stainless Steel
16	Body Seal	RPTFE
17	Grounding Spring	Hastelloy C
18	Body Joint Stud	ASTM A193 Grade B8M
19	Body Joint Nut	ASTM A194 Grade 8
20	Lockwasher	302 or 304 Stainless Steel

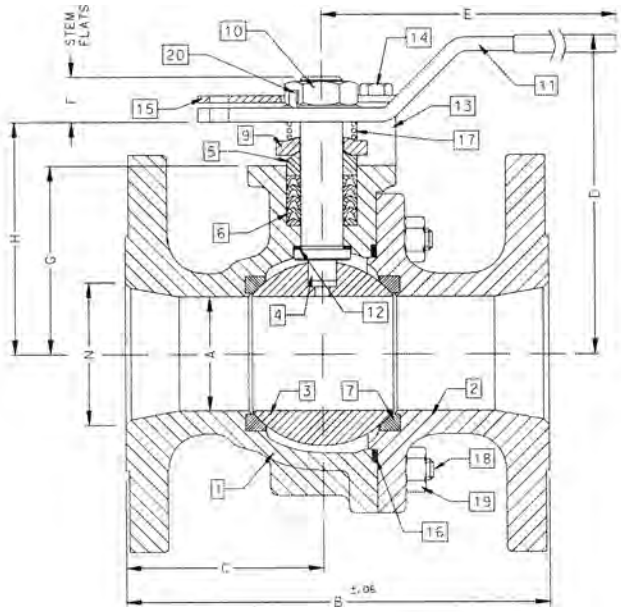

ACTUATOR MOUNTING

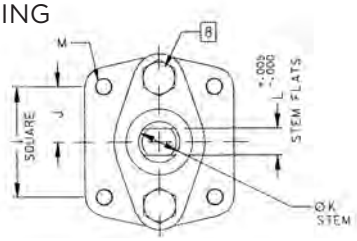

OPTIONS AVAILABLE

(MORE INFORMATION IN SECTION J)

- Minimum quantities apply.
- To specify an option, replace the "01" standard suffix with the suffix of the option.
- To specify multiple options, replace the "01" suffix with the desired suffixes in the numerical order shown below. NOTE: Not all suffixes can be combined together.

(SUFFIX)	OPTION
-01	Standard Configuration
-04-	2-1/4" Stem Extension (Carbon Steel, Zinc Plated)
-14-	Side Vented Ball (Uni-Directional)
-21-	UHMWPE Seats
-24-	Graphite Packing, Spiral Wound Graphite Body Seal, RPTFE Bearing (API 607, 6th Edition, ISO 10497:2010)
-35-	PTFE Seats and Seals
-38-	PEEK Seats and Graphite Packing
-49-	No Lubrication. Assembled Dry
-57-	Oxygen Cleaned
-65-	MPTFE Seats and Graphite Packing (Fire Safe)
-67-	Cleaned for Industrial Gases
-69-	Drilled and Tapped Purge Port with Plugs
-70-	4" Extended Bonnet
-73-	316 Stainless Steel Spiral Wound Gaskets with PTFE Filler
-76-	Live Loaded 87A/88A Series (Lever)
-77-	Live Loaded (Gear, Actuator)
-80-	TFM 1600 Seats, PTFE Chevron Packing, Spiral Wound PTFE Body Seal PEEK Bearing
-82-	Flat Face Flanges
-90-	Double Packed 4" Extended Bonnet
-9P-	Double Packed 4" Extended Bonnet with Monitoring Port
-CE-	CE Marking. See Page D-3 "Product Approvals" for Availability
-EF-	Graphite Packing (API 641 Compliant)
-EP-	Garlock EVSP Stem Packing with Spiral Wound Graphite Gasket (Fire Safe by Design)
-KF-	PCTFE Stem Bearing
-MG-	Gear Operator with Standard Handwheel
-MH-	Gear Operator with Standard Handwheel & Locking Device
-MJ-	Gear Operator with Oversize Handwheel
-MK-	Gear Operator with Oversize Handwheel & Locking Device
-MP-	Positive Material Identification
-TC-	With Test Certificate
-TD-	Tested to API Spec 6D
-UA-	AIS (American Iron & Steel) Compliant
-UL-	UL & CSA Listed (with Markings)
-ZP1-	Fugitive Emissions Packing (Viton)
-ZP2-	Fugitive Emissions Packing (Buna-N)
-ZP3-	Fugitive Emissions Packing (Kalrez)

Pressure/Temperature Ratings - Page M-32, Graph No. 48

DIMENSIONS

PART NO.	SIZE	A	B	C	D	E	F	G	H	I	J	K	L	M	N	WT.
87H-109-01	2-1/2"	2.00	7.50	3.50	5.61	8.41	0.80	3.31	4.08	1.949	0.974	0.750	0.477	5/16-18	2.50	27
87H-100-01	3"	2.50	8.00	3.51	6.24	8.41	0.80	3.94	4.71	1.949	0.974	0.750	0.477	5/16-18	3.00	34

aalberts integrated piping systems

87H-100 SERIES

HASTELLOY C ASME CLASS 150 FLANGED STD. PORT BALL VALVE
4" THRU 8"

5 YEAR WARRANTY MADE IN USA

FOR STANDARDS COMPLIANCE AND STANDARD FEATURES REFER TO PAGE D-3.

STANDARD MATERIAL LIST

	PART	MATERIAL
1	Body	ASTM A494-CW12MW
2	Retainer	ASTM A494-CW12MW
3	Ball	ASTM B574-C276
4	Stem	ASTM B574-C276
5	Packing Gland	ASTM B574-C276
6	Stem Seals	PTFE
7	Seats	RPTFE
8	Gland Screws	ASTM A193 B8 Class 1
9	Gland Plate	316 Stainless Steel
10	Adapter Screw	18-8 Stainless Steel
11	Handle Adapter	316 Stainless Steel
12	Stem Bearing	RPTFE
13	Stop	ASTM A276 Type 316
14	Stop Screw	316 Stainless Steel
15	Lock Plate	302 or 304 Stainless Steel
16	Body Seal	RPTFE
17	Grounding Spring	Hastelloy C
18	Body Joint Stud	ASTM A193 Grade B8M
19	Body Joint Nut	ASTM A194 Grade 8
20	Lockwasher	302 or 304 Stainless Steel
21	Pipe Handle	Galvanized Steel (not Shown)

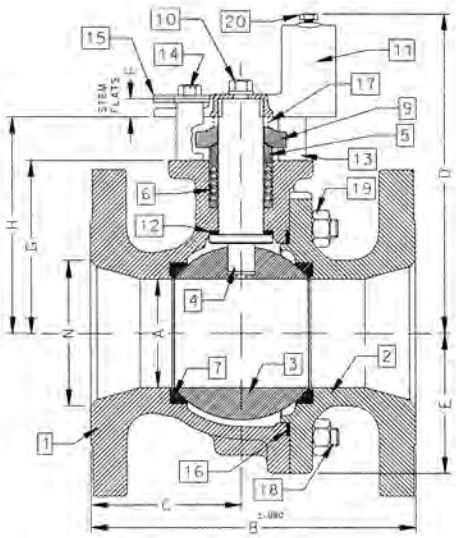

ACTUATOR MOUNTING

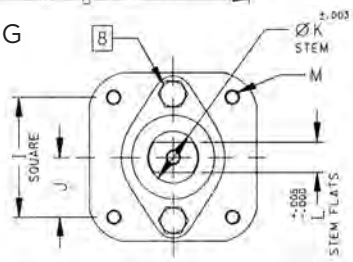

OPTIONS AVAILABLE

(MORE INFORMATION IN SECTION J)

- Minimum quantities apply.
- To specify an option, replace the "01" standard suffix with the suffix of the option.
- To specify multiple options, replace the "01" suffix with the desired suffixes in the numerical order shown below. NOTE: Not all suffixes can be combined together.

(SUFFIX)	OPTION
-01	Standard Configuration
-14-	Side Vented Ball (Uni-Directional)
-21-	UHMWPE Seats
-24-	Graphite Packing, Spiral Wound Graphite Body Seal, RPTFE Bearing (API 607, 6th Edition, ISO 10497:2010)
-35-	PTFE Seats and Seals
-49-	No Lubrication. Assembled Dry
-57-	Oxygen Cleaned
-65-	MPTFE Seats and Graphite Packing (Fire Safe)
-67-	Cleaned for Industrial Gases
-69-	Drilled and Tapped Purge Ports with Plugs
-70-	Extended Bonnet
-73-	316 Stainless Steel Spiral Wound Gaskets with PTFE Filler
-76-	Live Loaded (Lever)
-77-	Live Loaded (Gear, Actuator)
-80-	TFM 1600 Seats, PTFE Chevron Packing, Spiral Wound PTFE Body Seal PEEK Bearing
-82-	Flat Face Flanges
-90-	Double Packed 4" Extended Bonnet
-9P-	Double Packed 4" Extended Bonnet with Monitoring Port
-CE-	CE Marking. See Page D-3 "Product Approvals" for Availability
-EF-	Graphite Packing (API 641 Compliant)
-EP-	Garlock EVSP Stem Packing with Spiral Wound Graphite Gasket (Fire Safe by Design)
-KF-	PCTFE Stem Bearing
-MG-	Gear Operator with Standard Handwheel
-MH-	Gear Operator with Standard Handwheel & Locking Device
-MJ-	Gear Operator with Oversize Handwheel
-MK-	Gear Operator with Oversize Handwheel & Locking Device
-MP-	Positive Material Identification
-TC-	With Test Certificate
-TD-	Tested to API Spec 6D
-UA-	AIS (American Iron & Steel) Compliant
-UL-	UL & CSA Listed (with Markings)
-ZP1-	Fugitive Emissions Packing (Viton)
-ZP2-	Fugitive Emissions Packing (Buna-N)
-ZP3-	Fugitive Emissions Packing (Kalrez)

Pressure/Temperature Ratings - Page M-32, Graph No. 48

DIMENSIONS

PART NO.	SIZE	A	B	C	D	E	F	G	H	I	J	K	L	M	N	WT.
87H-10A-01	4"	3.00	9.00	4.18	8.80	3.88	0.50	4.75	5.95	2.840	1.420	1.250	0.725	3/8-16	4.00	73
87H-10C-01	6"	4.00	10.50	4.69	9.99	5.13	0.50	5.94	7.13	2.840	1.420	1.250	0.725	3/8-16	6.00	117
87H-10E-01	8"	6.00	18.00	9.00	13.73	7.00	1.00	7.75	9.48	4.596	2.298	2.000	1.375	3/4-10	8.00	310

87H-100 SERIES

HASTELLOY C ASME CLASS 150 FLANGED STD. PORT BALL VALVE
10"

5 YEAR WARRANTY MADE IN USA

FOR STANDARDS COMPLIANCE AND STANDARD FEATURES REFER TO PAGE D-3.

STANDARD MATERIAL LIST

	PART	MATERIAL
1	Body	ASTM A494-CW12MW
2	Retainer	ASTM A494-CW12MW
3	Ball	ASTM B574-C276
4	Stem	ASTM B574-C276
5	Packing Gland	ASTM B574-C276
6	Stem Seals	PTFE
7	Seats	TFM 1700
8	Gland Screws	ASTM A193 B8 Class 1
9	Gland Plate	316 Stainless Steel
10	Stem Bearing	RPTFE
11	Body Seal	RPTFE
12	Body Joint Stud	ASTM A193 Grade B8M
13	Body Joint Nut	ASTM A194 Grade 8

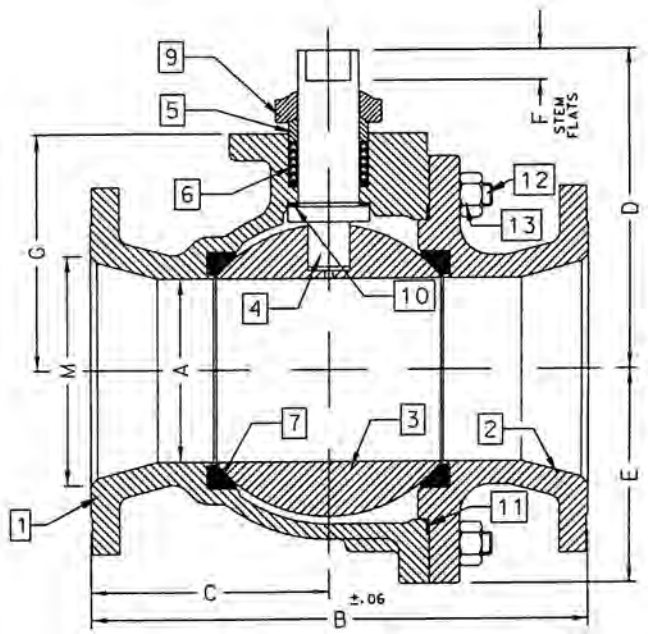

ACTUATOR MOUNTING

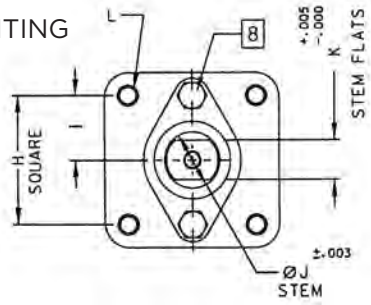

OPTIONS AVAILABLE

(MORE INFORMATION IN SECTION J)

- Minimum quantities apply.
- To specify an option, replace the "01" standard suffix with the suffix of the option.
- To specify multiple options, replace the "01" suffix with the desired suffixes in the numerical order shown below. NOTE: Not all suffixes can be combined together.

(SUFFIX)	OPTION
-01	Standard Configuration
-14-	Side Vented Ball (Uni-Directional)
-21-	UHMWPE Seats
-24-	Graphite Packing, Spiral Wound Graphite Body Seal, RPTFE Bearing (API 607, 6th Edition, ISO 10497:2010)
-35-	PTFE Seats and Seals
-49-	No Lubrication. Assembled Dry
-57-	Oxygen Cleaned
-65-	MPTFE Seats and Graphite Packing (Fire Safe)
-69-	Drilled and Tapped Purge Port with Plugs
-70-	4" Extended Bonnet
-77-	Live Loaded 87A/88A Series (Gear, Actuator)
-80-	TFM 1600 Seats, PTFE Chevron Packing, Spiral Wound PTFE Body Seal, PEEK Bearing
-82-	Flat Face Flanges
-90-	Double Packed 4" Extended Bonnet
-9P-	Double Packed 4" Extended Bonnet with Monitoring Port
-CE-	CE Marking. See Page D-3 "Product Approvals" for Availability
-EF-	Graphite Packing (API 641 Compliant)
-EP-	Garlock EVSP Stem Packing with Spiral Wound Graphite Gasket (Fire Safe by Design)
-KF-	PCTFE Stem Bearing
-MG-	Gear Operator with Standard Handwheel
-MH-	Gear Operator with Standard Handwheel & Locking Device
-MJ-	Gear Operator with Oversize Handwheel
-MK-	Gear Operator with Oversize Handwheel & Locking Device
-MP-	Positive Material Identification
-TC-	With Test Certificate
-TD-	Tested to API Spec 6D
-UA-	AIS (American Iron & Steel) Compliant
-UL-	UL & CSA Listed (with Markings)
-ZP1-	Fugitive Emissions Packing (Viton)
-ZP2-	Fugitive Emissions Packing (Buna-N)
-ZP3-	Fugitive Emissions Packing (Kalrez)

Pressure/Temperature Ratings - Page M-32, Graph No. 48

DIMENSIONS

PART NO.	SIZE	A	B	C	D	E	F	G	H	I	J	K	L	M	WT.
87H-10G-01	10"	8.00	21.00	10.37	12.83	9.18	1.00	10.22	4.596	2.298	2.000	1.375	3/4-10	10.00	526

aalberts integrated piping systems

87H-200 SERIES

HASTELLOY C ASME CLASS 150 FLANGED FULL PORT BALL VALVE
1/2" THRU 1"

5 YEAR WARRANTY MADE IN USA

FOR STANDARDS COMPLIANCE AND STANDARD FEATURES REFER TO PAGE D-3.

STANDARD MATERIAL LIST

	PART	MATERIAL
1	Body	ASTM A494-CW12MW
2	Retainer	ASTM A494-CW12MW
3	Ball	ASTM B574-C276
4	Stem	ASTM B574-C276
5	Packing Gland	ASTM B574-C276
6	Stem Seals	PTFE
7	Seats	TFM 1700
8	Gland Screws	ASTM A193 B8 Class 1
9	Gland Plate	302 or 304 Stainless Steel
10	Stem Nut	316 Stainless Steel
11	Lever	302 or 304 with Vinyl Grip
12	Stem Bearing	RPTFE
13	Stop	ASTM A276 Type 316
14	Stop Screw	18-8 Stainless Steel
15	Lock Plate	302 or 304 Stainless Steel
16	Body Seal	RPTFE
17	Lockwasher	302 or 304 Stainless Steel
18	Grounding Spring	Hastelloy C

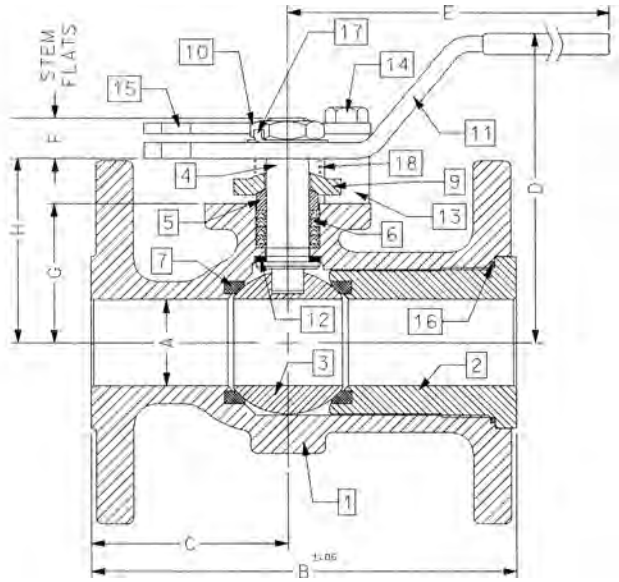

OPTIONS AVAILABLE

(MORE INFORMATION IN SECTION J)

- Minimum quantities apply.
- To specify an option, replace the "01" standard suffix with the suffix of the option.
- To specify multiple options, replace the "01" suffix with the desired suffixes in the numerical order shown below. NOTE: Not all suffixes can be combined together.

(SUFFIX)	OPTION
-01	Standard Configuration
-04-	2-1/4" Stem Extension (Carbon Steel, Zinc Plated)
-14-	Side Vented Ball (Uni-Directional)
-15-	Wheel Handle, Steel
-21-	UHMWPE Seats
-24-	Graphite Packing, Spiral Wound Graphite Body Seal, RPTFE Bearing (API 607, 6th Edition, ISO 10497:2010)
-35-	PTFE Seats and Seals
-38-	PEEK Seats and Graphite Packing
-49-	No Lubrication. Assembled Dry
-57-	Oxygen Cleaned
-65-	MPTFE Seats and Graphite Packing (Fire Safe)
-69-	Drilled and Tapped Purge Port with Plugs
-70-	4" Extended Bonnet
-73-	316 Stainless Steel Spiral Wound Gaskets with PTFE Filler
-76-	Live Loaded (Lever)
-77-	Live Loaded (Gear, Actuator)
-80-	TFM 1600 Seats, PTFE Chevron Packing, Spiral Wound PTFE Body Seal, PEEK Bearing
-82-	Flat Face Flanges
-90-	Double Packed 4" Extended Bonnet
-9P-	Double Packed 4" Extended Bonnet with Monitoring Port
-CE-	CE Marking. See Page D-3 "Product Approvals" for Availability
-EF-	Graphite Packing (API 641 Compliant) (Not Available on 1/2" Size)
-EP-	Garlock EVSP Stem Packing with Spiral Wound Graphite Gasket (Fire Safe by Design)
-KF-	PCTFE Stem Bearing
-MP-	Positive Material Identification
-TC-	With Test Certificate
-TD-	Tested to API Spec 6D
-UA-	AIS (American Iron & Steel) Compliant
-UL-	UL & CSA Listed (with Markings)
-ZP1-	Fugitive Emissions Packing (Viton)
-ZP2-	Fugitive Emissions Packing (Buna-N)
-ZP3-	Fugitive Emissions Packing (Kalrez)

Pressure/Temperature Ratings - Page M-32, Graph No. 48

ACTUATOR MOUNTING

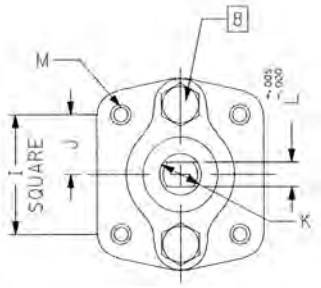

DIMENSIONS

PART NO.	SIZE	A	B	C	D	E	F	G	H	I	J	K	L	M	WT.
87H-203-01A	1/2"	0.50	4.25	2.06	2.74	5.12	0.24	1.09	1.44	1.00	0.500	0.375	0.245	10-24	5
87H-204-01A	3/4"	0.75	4.62	2.18	3.43	5.54	0.22	1.65	2.13	1.392	0.696	0.500	0.312	1/4-20	6
87H-205-01	1"	1.00	5.00	2.32	4.62	6.53	0.47	1.62	2.15	1.392	0.696	0.500	0.287	1/4-20	7

87H-200 SERIES

HASTELLOY C ASME CLASS 150 FLANGED FULL PORT BALL VALVE
1-1/2" THRU 2-1/2"

5 YR WARRANTY MADE IN USA

FOR STANDARDS COMPLIANCE AND STANDARD FEATURES REFER TO PAGE D-3.

STANDARD MATERIAL LIST

	PART	MATERIAL
1	Body	ASTM A494-CW12MW
2	Retainer	ASTM A494-CW12MW
3	Ball	ASTM B574-C276
4	Stem	ASTM B574-C276
5	Packing Gland	ASTM B574-C276
6	Stem Seals	PTFE
7	Seats	TFM 1700
8	Gland Screws	ASTM A193 B8 Class 1
9	Gland Plate	316 Stainless Steel
10	Adapter Screw	18-8 Stainless Steel
11	Lever	316 Stainless Steel
12	Stem Bearing	RPTFE
13	Stop	ASTM A276 Type 316
14	Stop Screw	316 Stainless Steel
15	Lock Plate	302 or 304 Stainless Steel
16	Body Seal	RPTFE
17	Grounding Spring	Hastelloy C
18	Body Joint Stud	ASTM A193 Grade B8M
19	Body Joint Nut	ASTM A194 Grade 8
20	Lockwasher	302 or 304 Stainless Steel

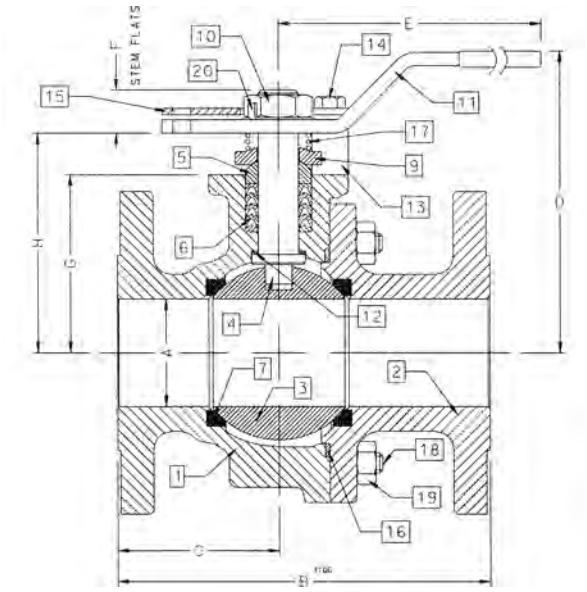

ACTUATOR MOUNTING

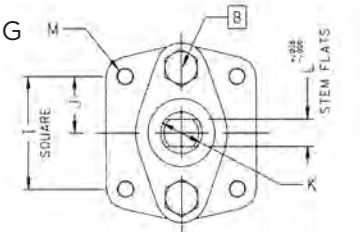

OPTIONS AVAILABLE

(MORE INFORMATION IN SECTION J)

- Minimum quantities apply.
- To specify an option, replace the "01" standard suffix with the suffix of the option.
- To specify multiple options, replace the "01" suffix with the desired suffixes in the numerical order shown below. NOTE: Not all suffixes can be combined together.

(SUFFIX)	OPTION
-01	Standard Configuration
-04-	2-1/4" Stem Extension (Carbon Steel, Zinc Plated) (up to 2-1/2")
-14-	Side Vented Ball (Uni-Directional)
-21-	UHMWPE Seats
-24-	Graphite Packing, Spiral Wound Graphite Body Seal, RPTFE Bearing (API 607, 6th Edition, ISO 10497:2010)
-35-	PTFE Seats and Seals
-38-	PEEK Seats and Graphite Packing
-49-	No Lubrication. Assembled Dry
-57-	Oxygen Cleaned
-65-	MPTFE Seats and Graphite Packing (Fire Safe)
-69-	Drilled and Tapped Purge Ports with Plugs
-70-	4" Extended Bonnet
-73-	316 Stainless Steel Spiral Wound Gaskets with PTFE Filler
-76-	Live Loaded (Lever)
-77-	Live Loaded (Gear, Actuator)
-80-	TFM 1600 Seats, PTFE Chevron Packing, Spiral Wound PTFE Body Seal, PEEK Bearing
-82-	Flat Face Flanges
-MG-	Gear Operator with Standard Handwheel
-90-	Double Packed 4" Extended Bonnet
-9P-	Double Packed 4" Extended Bonnet with Monitoring Port
-CE-	CE Marking. See Page D-3 "Product Approvals" for Availability
-EF-	Graphite Packing (API 641 Compliant)
-EP-	Garlock EVSP Stem Packing with Spiral Wound Graphite Gasket (Fire Safe by Design)
-KF-	PCTFE Stem Bearing
-MH-	Gear Operator with Standard Handwheel & Locking Device
-MJ-	Gear Operator with Oversize Handwheel
-MK-	Gear Operator with Oversize Handwheel & Locking Device
-MP-	Positive Material Identification
-TC-	With Test Certificate
-TD-	Tested to API Spec 6D
-UA-	AIS (American Iron & Steel) Compliant
-UL-	UL & CSA Listed (with Markings)
-ZP1-	Fugitive Emissions Packing (Viton)
-ZP2-	Fugitive Emissions Packing (Buna-N)
-ZP3-	Fugitive Emissions Packing (Kalrez)

Pressure/Temperature Ratings - Page M-32, Graph No. 48

DIMENSIONS

PART NO.	SIZE	A	B	C	D	E	F	G	H	I	J	K	L	M	WT.
87H-207-01	1-1/2"	1.50	6.50	3.00	4.62	6.65	0.72	2.41	3.09	1.949	0.974	0.625	0.412	5/16-18	14
87H-208-01	2"	2.00	7.00	3.04	5.61	8.41	0.80	3.31	4.08	1.949	0.974	0.750	0.477	5/16-18	25
87H-209-01	2-1/2"	2.50	7.50	3.34	6.24	8.41	0.80	3.94	4.71	1.949	0.974	0.750	0.477	5/16-18	30

aalberts integrated piping systems

87H-200 SERIES

HASTELLOY C ASME CLASS 150 FLANGED FULL PORT BALL VALVE
3" THRU 6"

5 YEAR WARRANTY MADE IN USA

FOR STANDARDS COMPLIANCE AND STANDARD FEATURES REFER TO PAGE D-3.

STANDARD MATERIAL LIST

	PART	MATERIAL
1	Body	ASTM A494-CW12MW
2	Retainer	ASTM A494-CW12MW
3	Ball	ASTM B574-C276
4	Stem	ASTM B574-C276
5	Packing Gland	ASTM B574-C276
6	Stem Seals	PTFE
7	Seats	TFM 1700
8	Gland Screws	ASTM A193 B8 Class 1
9	Gland Plate	316 Stainless Steel
10	Adapter Screw	18-8 Stainless Steel
11	Handle Adapter	316 with Vinyl Grip
12	Stem Bearing	RPTFE
13	Stop	ASTM A276 Type 316
14	Stop Screw	316 Stainless Steel
15	Lock Plate	302 or 304 Stainless Steel
16	Body Seal	RPTFE
17	Grounding Spring	Hastelloy C
18	Body Joint Stud	ASTM A193 Grade B8M
19	Body Joint Nut	ASTM A194 Grade 8
20	Pipe Handle	Galvanized Steel (not shown)

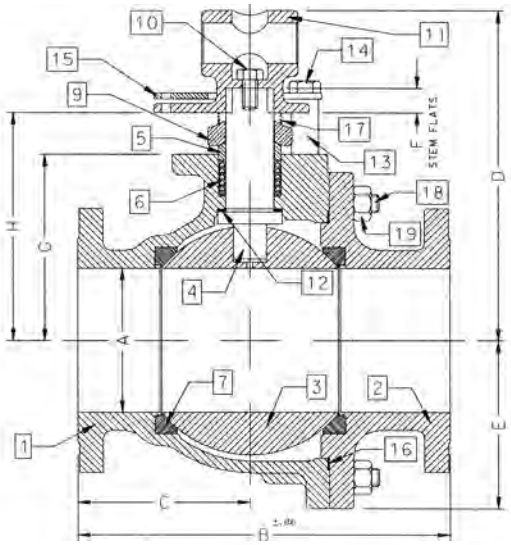

ACTUATOR MOUNTING

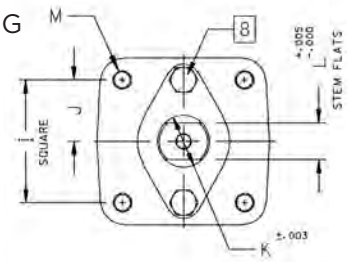

OPTIONS AVAILABLE

(MORE INFORMATION IN SECTION J)

- Minimum quantities apply.
- To specify an option, replace the "01" standard suffix with the suffix of the option
- To specify multiple options, replace the "01" suffix with the desired suffixes in the numerical order shown below. NOTE: Not all suffixes can be combined together.

(SUFFIX)	OPTION
-01	Standard Configuration
-14-	Side Vented Ball (Uni-Directional)
-21-	UHMWPE Seats
-24-	Graphite Packing, Spiral Wound Graphite Body Seal, RPTFE Bearing (API 607, 6th Edition, ISO 10497:2010)
-35-	PTFE Seats and Seals
-38-	PEEK Seatsand Graphite Packing
-49-	No Lubrication. Assembled Dry
-57-	Oxygen Cleaned
-65-	MPTFESeats and Graphite Packing (Fire Safe)
-69-	Drilled and Tapped Purge Ports with Plugs
-70-	4" Extended Bonnet
-73-	316Stainless Steel Spiral Wound Gaskets with PTFE Filler
-76-	Live Loaded (Lever)
-77-	Live Loaded (Gear,Actuator)
-80-	TFM 1600 Seats, PTFE Chevron Packing, Spiral Wound PTFE Body Seal, PEEK Bearing
-82-	Flat Face Flanges
-90-	Double Packed 4" Extended Bonnet
-9P-	Double Packed 4" Extended Bonnet with Monitoring Port
-CE-	CE Marking. See Page D-3 "Product Approvals" for Availability
-EF-	Graphite Packing (API 641 Compliant)
-EP-	Garlock EVSP Stem Packing with Spiral Wound Graphite Gasket (Fire Safe by Design)
-KF-	PCTFE Stem Bearing
-MG-	Gear Operator with Standard Handwheel
-MH-	Gear Operator with Standard Handwheel& Locking Device
-MJ-	Gear Operator with Oversize Handwheel
-MK-	Gear Operator with Oversize Handwheel & LockingDevice
-MP-	Positive Material Identification
-TC-	With Test Certificate
-TD-	Tested to API Spec 6D
-UA-	AIS (American Iron & Steel) Compliant
-UL-	UL & CSA Listed (with Markings)
-ZP1-	Fugitive Emissions Packing (Viton)
-ZP2-	Fugitive Emissions Packing (Buna-N)
-ZP3-	Fugitive Emissions Packing (Kalrez)

Pressure/Temperature Ratings - Page M-32, Graph No. 48

DIMENSIONS

PART NO.	SIZE	A	B	C	D	E	F	G	H	I	J	K	L	M	WT.
87H-200-01	3"	3.00	8.00	3.68	8.80	3.88	0.50	4.75	5.95	2.840	1.420	1.250	0.725	3/8-16	60
87H-20A-01	4"	4.00	9.00	3.94	9.99	5.13	0.50	5.94	7.13	2.840	1.420	1.250	0.725	3/8-16	91
87H-20C-01	6"	6.00	15.50	7.19	13.73	7.00	1.00	7.75	9.48	4.596	2.298	2.000	1.375	3/4-10	248

87H-200 SERIES

HASTELLOY C ASME CLASS 150 FLANGED FULL PORT BALL VALVE
8" THRU 12"

5 YEAR WARRANTY MADE IN USA

FOR STANDARDS COMPLIANCE AND STANDARD FEATURES REFER TO PAGE D-3.

STANDARD MATERIAL LIST

	PART	MATERIAL
1	Body	ASTM A494-CW12MW
2	Retainer	ASTM A494-CW12MW
3	Ball	ASTM B574-C276
4	Stem	ASTM B574-C276
5	Packing Gland	ASTM B574-C276
6	Stem Seals	PTFE
7	Seats	TFM 1700
8	Gland Screws	ASTM A193 B8 Class 1
9	Gland Plate	316 Stainless Steel
10	Stem Bearing	RPTFE
11	Body Seal	RPTFE
12	Body Joint Stud	ASTM A193 Grade B8M
13	Body Joint Nut	ASTM A194 Grade 8

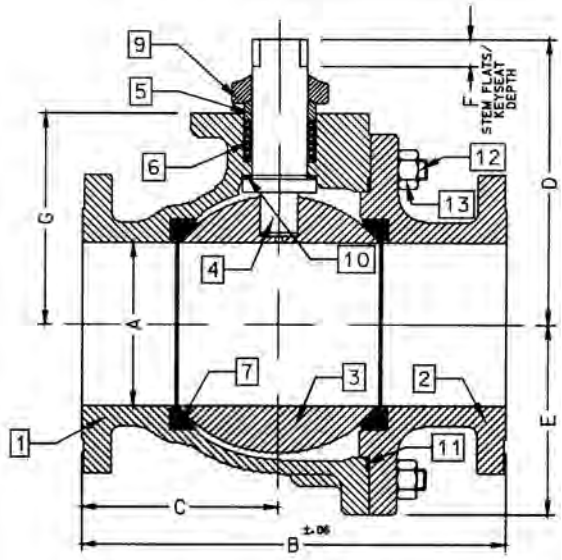

ACTUATOR MOUNTING

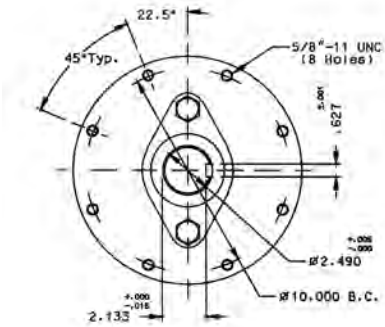

10" & 12"

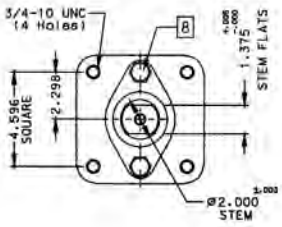

8"

OPTIONS AVAILABLE

(MORE INFORMATION IN SECTION J)

- Minimum quantities apply.
- To specify an option, replace the "01" standard suffix with the suffix of the option.
- To specify multiple options, replace the "01" suffix with the desired suffixes in the numerical order shown below. NOTE: Not all suffixes can be combined together.

(SUFFIX)	OPTION
-01	Standard Configuration
-14-	Side Vented Ball (Uni-Directional)
-21-	UHMWPE Seats
-24-	Graphite Packing, Spiral Wound Graphite Body Seal, RPTFE Bearing (API 607, 6th Edition, ISO 10497:2010)
-35-	PTFE Seats and Seals
-49-	No Lubrication. Assembled Dry
-57-	Oxygen Cleaned
-65-	MPTFE Seats and Graphite Packing (Fire Safe)
-69-	Drilled and Tapped Purge Ports with Plugs
-70-	4" Extended Bonnet (8" Only)
-77-	Live Loaded (Gear, Actuator)
-80-	TFM 1600 Seats, PTFE Chevron Packing, Spiral Wound PTFE Body Seal, PEEK Bearing
-82-	Flat Face Flanges
-90-	Double Packed 4" Extended Bonnet
-9P-	Double Packed 4" Extended Bonnet with Monitoring Port
-CE-	CE Marking. See Page D-3 "Product Approvals" for Availability
-EF-	Graphite Packing (API 641 Compliant)
-EP-	Garlock EVSP Stem Packing with Spiral Wound Graphite Gasket (Fire Safe by Design)
-KF-	PCTFE Stem Bearing
-MG-	Gear Operator with Standard Handwheel
-MH-	Gear Operator with Standard Handwheel & Locking Device
-MJ-	Gear Operator with Oversize Handwheel
-MK-	Gear Operator with Oversize Handwheel & Locking Device
-MP-	Positive Material Identification
-TC-	With Test Certificate
-TD-	Tested to API Spec 6D
-UA-	AIS (American Iron & Steel) Compliant
-UL-	UL & CSA Listed (with Markings)
-ZP1-	Fugitive Emissions Packing (Viton)
-ZP2-	Fugitive Emissions Packing (Buna-N)
-ZP3-	Fugitive Emissions Packing (Kalrez)

Pressure/Temperature Ratings - Page M-32, Graph No. 48

DIMENSIONS

PART NO.	SIZE	A	B	C	D	E	F	G
87H-20E-01	8"	8.00	18.00	8.88	12.83	9.18	1.00	10.22
87H-20G-01	10"	10.00	21.00	10.26	18.57	11.33	2.31	12.80
87H-20H-01	12"	12.00	24.00	12.09	20.31	13.40	2.31	14.92

aalberts integrated piping systems

87A-600 SERIES

ALLOY 20 ASME CLASS 300 FLANGED FULL PORT BALL VALVE
1/2" THRU 1"

5 YEAR WARRANTY MADE IN USA

FOR STANDARDS COMPLIANCE AND STANDARD FEATURES REFER TO PAGE D-3.

STANDARD MATERIAL LIST

	PART	MATERIAL
1	Body	ASTM A351 CN7M
2	Retainer	ASTM B473 (UNS N08020)
3	Ball	ASTM B473 (UNS N08020)
4	Stem	ASTM B473 (UNS N08020)
5	Packing Gland	ASTM A276 Type 316
6	Stem Seals	PTFE
7	Seats	TFM 1700
8	Gland Screws	ASTM A193 B8 Class 1
9	Gland Plate	302 or 304 Stainless Steel
10	Stem Nut	316 Stainless Steel
11	Lever	302 or 304 with Vinyl Grip
12	Stem Bearing	RPTFE
13	Stop	ASTM A276 Type 316
14	Stop Screw	18-8 Stainless Steel
15	Lock Plate	302 or 304 Stainless Steel
16	Body Seal	RPTFE
17	Lockwasher	302 or 304 Stainless Steel
18	Grounding Spring	Stainless Steel

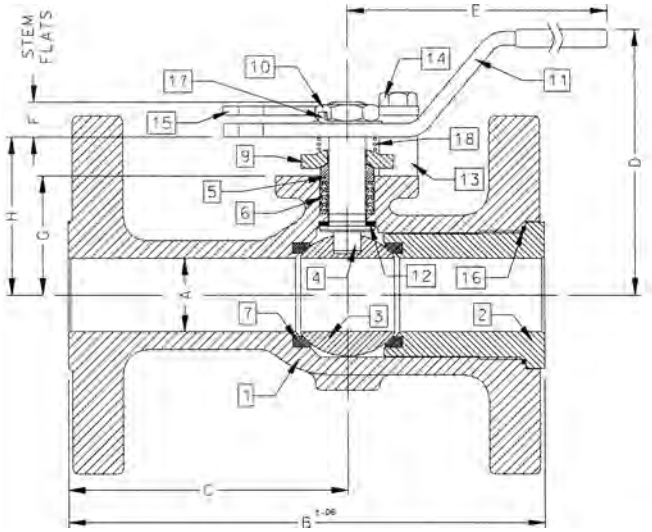

ACTUATOR MOUNTING

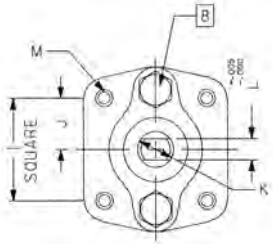

VARIATIONS AVAILABLE

- 87H - Hastelloy
- 87M - Monel
- 87N - Nickel
- 87S - 304L Stainless Steel

OPTIONS AVAILABLE

(MORE INFORMATION IN SECTION J)

- Minimum quantities apply.
- To specify an option, replace the "01" standard suffix with the suffix of the option.
- To specify multiple options, replace the "01" suffix with the desired suffixes in the numerical order shown below. NOTE: Not all suffixes can be combined together.

(SUFFIX)	OPTION
-01	Standard Configuration
-04-	2-1/4" Stem Extension (Carbon Steel, Zinc Plated)
-14-	Side Vented Ball (Uni-Directional)
-15-	Wheel Handle, Steel
-21-	UHMWPE Seats
-24-	Graphite Packing, Spiral Wound Graphite Body Seal, RPTFE Bearing (API 607, 6th Edition, ISO 10497:2010)
-35-	PTFE Seats and Seals
-38-	PEEK Seats and Graphite Packing
-49-	No Lubrication. Assembled Dry
-57-	Oxygen Cleaned
-65-	MPTFE Seats and Graphite Packing (Fire Safe)
-69-	Drilled and Tapped Purge Port with Plugs
-70-	4" Extended Bonnet
-73-	316 Stainless Steel Spiral Wound Gaskets with PTFE Filler
-76-	Live Loaded (Lever)
-77-	Live Loaded (Gear, Actuator)
-80-	TFM 1600 Seats, PTFE Chevron Packing, Spiral Wound PTFE Body Seal, PEEK Bearing
-82-	Flat Face Flanges
-90-	Double Packed 4" Extended Bonnet
-9P-	Double Packed 4" Extended Bonnet with Monitoring Port
-EF-	Graphite Packing (API 641 Compliant) (Not Available on 1/2" Size)
-CE-	CE Marking. See Page D-3 "Product Approvals" for Availability
-EP-	Garlock EVSP Stem Packing with Spiral Wound Graphite Gasket (Fire Safe by Design)
-KF-	PCTFE Stem Bearing
-MP-	Positive Material Identification
-TC-	With Test Certificate
-TD-	Tested to API Spec 6D
-UA-	AIS (American Iron & Steel) Compliant
-UL-	UL & CSA Listed (with Markings)
-ZP1-	Fugitive Emissions Packing (Viton)
-ZP2-	Fugitive Emissions Packing (Buna-N)
-ZP3-	Fugitive Emissions Packing (Kalrez)

Pressure/Temperature Ratings - Page M-31, Graph No. 47

DIMENSIONS

PART NO.	SIZE	A	B	C	D	E	F	G	H	I	J	K	L	M	WT.
87A-603-01A	1/2"	0.50	5.50	3.31	2.74	5.12	0.24	1.09	1.44	1.000	0.500	0.375	0.245	10-24	6
87A-604-01A	3/4"	0.75	6.00	3.56	3.43	5.54	0.22	1.65	2.13	1.392	0.696	0.500	0.287	1/4-20	9
87A-605-01	1"	1.00	6.50	3.82	4.62	6.53	0.47	1.62	2.15	1.392	0.696	0.500	0.287	1/4-20	11

87A-600 SERIES

ALLOY 20 ASME CLASS 300 FLANGED FULL PORT BALL VALVE
1-1/2" THRU 2-1/2"

5 YEAR WARRANTY MADE IN USA

FOR STANDARDS COMPLIANCE AND STANDARD FEATURES REFER TO PAGE D-3.

STANDARD MATERIAL LIST

	PART	MATERIAL
1	Body	ASTM A351 CN7M
2	Retainer	ASTM A351 CN7M
3	Ball	ASTM B473 (UNS N08020) or CN7M
4	Stem	ASTM B473 (UNS N08020)
5	Packing Gland	ASTM A276 Type 316
6	Stem Seals	PTFE
7	Seats	TFM 1700
8	Gland Screws	ASTM A193 B8 Class 1
9	Gland Plate	316 Stainless Steel
10	Stem Nut	18-8 Stainless Steel
11	Lever	316 Stainless Steel
12	Stem Bearing	RPTFE
13	Stop	ASTM A276 Type 316
14	Stop Screw	316 Stainless Steel
15	Lock Plate	302 or 304 Stainless Steel
16	Body Seal	RPTFE
17	Grounding Spring	Stainless Steel
18	Body Joint Stud	ASTM A193 Grade B8M
19	Body Joint Nut	ASTM A194 Grade 8
20	Lockwasher	302 or 304 Stainless Steel

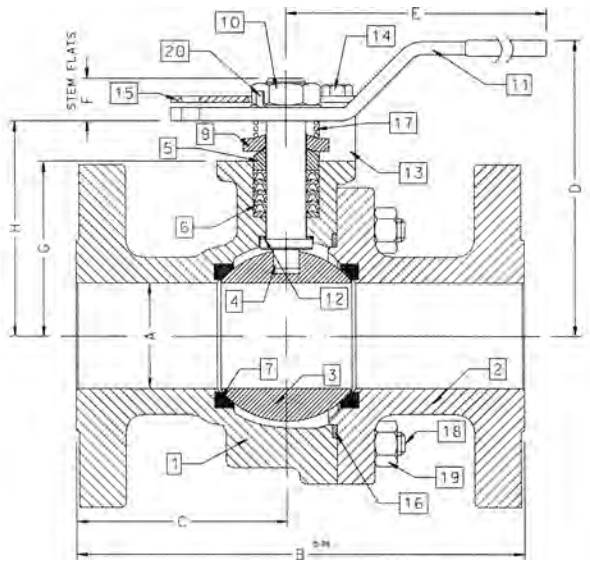

ACTUATOR MOUNTING

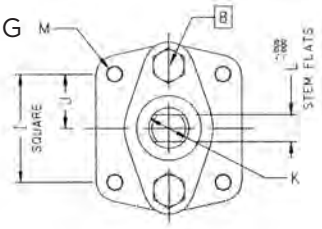

VARIATIONS AVAILABLE

- 87H - Hastelloy
- 87M - Monel
- 87N - Nickel
- 87S - 304L Stainless Steel

OPTIONS AVAILABLE

(MORE INFORMATION IN SECTION J)

- Minimum quantities apply.
- To specify an option, replace the "01" standard suffix with the suffix of the option.
- To specify multiple options, replace the "01" suffix with the desired suffixes in the numerical order shown below. NOTE: Not all suffixes can be combined together.

(SUFFIX)	OPTION
-01	Standard Configuration
-04-	2-1/4" Stem Extension (Carbon Steel, Zinc Plated)
-14-	Side Vented Ball (Uni-Directional)
-21-	UHMWPE Seats
-24-	Graphite Packing, Spiral Wound Graphite Body Seal, RPTFE Bearing (API 607, 6th Edition, ISO 10497:2010)
-35-	PTFE Seats and Seals
-38-	PEEK Seats and Graphite Packing (3" Only)
-49-	No Lubrication. Assembled Dry
-57-	Oxygen Cleaned
-65-	MPTFE Seats and Graphite Packing (Fire Safe)
-69-	Drilled and Tapped Purge Ports with Plugs
-70-	4" Extended Bonnet
-73-	316 Stainless Steel Spiral Wound Gaskets with PTFE Filler
-76-	Live Loaded (Lever)
-77-	Live Loaded (Gear, Actuator)
-80-	TFM 1600 Seats, PTFE Chevron Packing, Spiral Wound PTFE Body Seal, PEEK Bearing
-82-	Flat Face Flanges
-90-	Double Packed 4" Extended Bonnet
-9P-	Double Packed 4" Extended Bonnet with Monitoring Port
-CE-	CE Marking. See Page D-3 "Product Approvals" for Availability
-EF-	Graphite Packing (API 641 Compliant)
-EP-	Garlock EVSP Stem Packing with Spiral Wound Graphite Gasket (Fire Safe by Design)
-KF-	PCTFE Stem Bearing
-MG-	Gear Operator with Standard Handwheel
-MH-	Gear Operator with Standard Handwheel & Locking Device
-MJ-	Gear Operator with Oversize Handwheel
-MK-	Gear Operator with Oversize Handwheel & Locking Device
-MP-	Positive Material Identification
-TC-	With Test Certificate
-TD-	Tested to API Spec 6D
-UA-	AIS (American Iron & Steel) Compliant
-UL-	UL & CSA Listed (with Markings)
-ZP1-	Fugitive Emissions Packing (Viton)
-ZP2-	Fugitive Emissions Packing (Buna-N)
-ZP3-	Fugitive Emissions Packing (Kalrez)

Pressure/Temperature Ratings - Page M-31, Graph No. 47

DIMENSIONS

PART NO.	SIZE	A	B	C	D	E	F	G	H	I	J	K	L	M	WT.
87A-607-01	1-1/2"	1.50	7.50	3.50	4.62	6.65	0.72	2.41	3.09	1.949	0.974	0.625	0.412	5/16-18	21
87A-608-01	2"	2.00	8.50	4.00	5.61	8.41	0.80	3.31	4.08	1.949	0.974	0.750	0.477	5/16-18	37
87A-609-01	2-1/2"	2.50	9.50	4.44	6.24	8.41	0.80	3.94	4.71	1.949	0.974	0.750	0.477	5/16-18	57

aalberts integrated piping systems

87A-600 SERIES

ALLOY 20 ASME CLASS 300 FLANGED FULL PORT BALL VALVE
3" THRU 6"

5 YEAR WARRANTY MADE IN USA

FOR STANDARDS COMPLIANCE AND STANDARD FEATURES REFER TO PAGE D-3.

STANDARD MATERIAL LIST

	PART	MATERIAL
1	Body	ASTM A351 CN7M
2	Retainer	ASTM A351 CN7M
3	Ball	ASTM B473 (UNS N08020) or CN7M
4	Stem	ASTM B473 (UNS N08020)
5	Packing Gland	ASTM A276 Type 316
6	Stem Seals	PTFE
7	Seats	TFM 1700
8	Gland Screws	ASTM A193 B8 Class 1
9	Gland Plate	316 Stainless Steel
10	Adapter Screw	18-8 Stainless Steel
11	Handle Adapter	316 Stainless Steel
12	Stem Bearing	RPTFE
13	Stop	ASTM A276 Type 316
14	Stop Screw	316 Stainless Steel
15	Lock Plate	302 or 304 Stainless Steel
16	Body Seal	RPTFE
17	Grounding Spring	Stainless Steel
18	Body Joint Stud	ASTM A193 Grade B8M
19	Body Joint Nut	ASTM A194 Grade 8
20	Pipe Handle	Galvanized Steel (not shown)

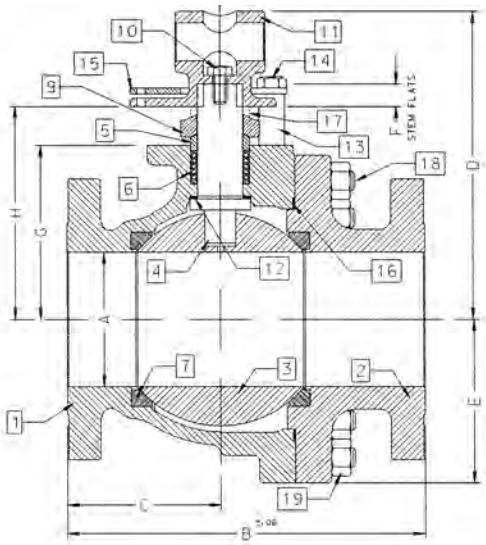

ACTUATOR MOUNTING

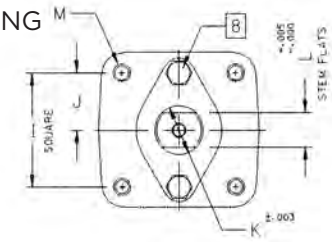

VARIATIONS AVAILABLE

- 87H - Hastelloy
- 87N - Nickel
- 87S - 304L Stainless Steel

OPTIONS AVAILABLE

(MORE INFORMATION IN SECTION J)

- Minimum quantities apply.
- To specify an option, replace the "01" standard suffix with the suffix of the option.
- To specify multiple options, replace the "01" suffix with the desired suffixes in the numerical order shown below. NOTE: Not all suffixes can be combined together.

(SUFFIX)	OPTION
-01	Standard Configuration
-14-	Side Vented Ball (Uni-Directional)
-21-	UHMWPE Seats
-24-	Graphite Packing, Spiral Wound Graphite Body Seal, RPTFE Bearing (API 607, 6th Edition, ISO 10497:2010)
-35-	PTFE Seats and Seals
-38-	PEEK Seats and Graphite Packing (3" Only)
-49-	No Lubrication. Assembled Dry
-57-	Oxygen Cleaned
-65-	MPTFE Seats and Graphite Packing (Fire Safe)
-69-	Drilled and Tapped Purge Port with Plugs
-70-	4" Extended Bonnet
-73-	316 Stainless Steel Spiral Wound Gaskets with PTFE Filler
-76-	Live Loaded (Lever)
-77-	Live Loaded (Gear, Actuator)
-80-	TFM 1600 Seats, PTFE Chevron Packing, Spiral Wound PTFE Body Seal, PEEK Bearing
-82-	Flat Face Flanges
-90-	Double Packed 4" Extended Bonnet
-9P-	Double Packed 4" Extended Bonnet with Monitoring Port
-CE-	CE Marking. See Page D-3 "Product Approvals" for Availability
-EF-	Graphite Packing (API 641 Compliant)
-EP-	Garlock EVSP Stem Packing with Spiral Wound Graphite Gasket (Fire Safe by Design)
-KF-	PCTFE Stem Bearing
-MG-	Gear Operator with Standard Handwheel
-MH-	Gear Operator with Standard Handwheel & Locking Device
-MJ-	Gear Operator with Oversize Handwheel
-MK-	Gear Operator with Oversize Handwheel & Locking Device
-MP-	Positive Material Identification
-TC-	With Test Certificate
-TD-	Tested to API Spec 6D
-UA-	AIS (American Iron & Steel) Compliant
-UL-	UL & CSA Listed (with Markings)
-ZP1-	Fugitive Emissions Packing (Viton)
-ZP2-	Fugitive Emissions Packing (Buna-N)
-ZP3-	Fugitive Emissions Packing (Kalrez)

Pressure/Temperature Ratings - Page M-31, Graph No. 47

DIMENSIONS

PART NO.	SIZE	A	B	C	D	E	F	G	H	I	J	K	L	M	WT.
87A-600-01	3"	3.00	11.12	5.24	8.80	4.06	0.50	4.75	5.95	2.840	1.420	1.250	0.725	3/8-16	78
87A-60A-01	4"	4.00	12.00	5.44	9.99	5.25	0.50	5.94	7.13	2.840	1.420	1.250	0.725	3/8-16	133
87A-60C-01	6"	6.00	15.88	6.82	13.73	7.30	1.00	7.75	9.48	4.596	2.298	2.000	1.375	3/4-10	329

87A-600 SERIES

ALLOY 20 ASME CLASS 300 FLANGED FULL PORT BALL VALVE
8" THRU 12"

5 YEAR WARRANTY MADE IN USA

FOR STANDARDS COMPLIANCE AND STANDARD FEATURES REFER TO PAGE D-3.

STANDARD MATERIAL LIST

	PART	MATERIAL
1	Body	ASTM A351 CN7M
2	Retainer	ASTM A351 CN7M
3	Ball	ASTM B473 (UNS N08020) or CN7M
4	Stem	ASTM B473 (UNS N08020)
5	Packing Gland	ASTM A276 Type 316
6	Stem Seals	PTFE
7	Seats	TFM 1700
8	Gland Screws	ASTM A193 B8 Class 1
9	Gland Plate	316 Stainless Steel
10	Stem Bearing	RPTFE
11	Body Seal	RPTFE
12	Body Joint Stud	ASTM A193 Grade B8M
13	Body Joint Nut	ASTM A194 Grade 8

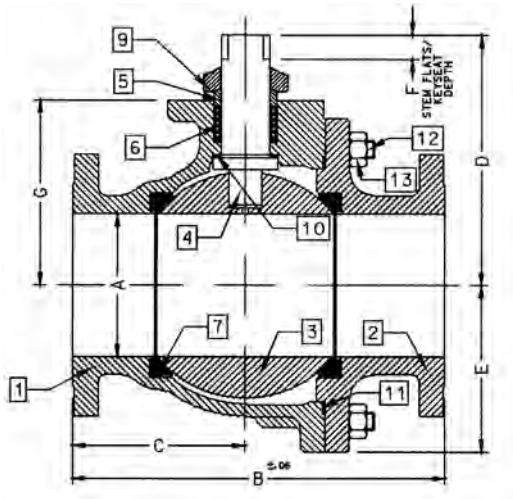

ACTUATOR MOUNTING

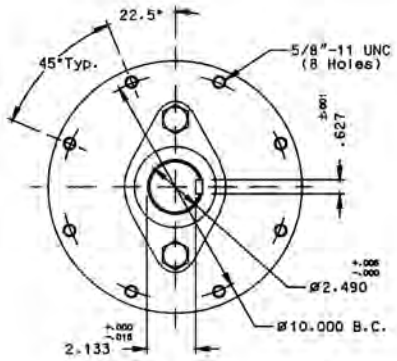

10" & 12"

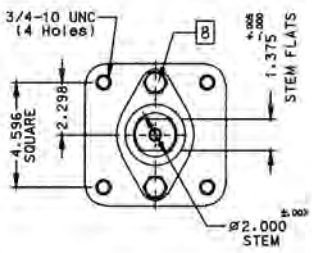

8"

VARIATIONS AVAILABLE

- 87H - Hastelloy
- 87N - Nickel
- 87S - 304L Stainless Steel

OPTIONS AVAILABLE

(MORE INFORMATION IN SECTION J)

- Minimum quantities apply.
- To specify an option, replace the "01" standard suffix with the suffix of the option.
- To specify multiple options, replace the "01" suffix with the desired suffixes in the numerical order shown below. NOTE: Not all suffixes can be combined together.

(SUFFIX)	OPTION
-01	Standard Configuration
-14-	Side Vented Ball (Uni-Directional)
-21-	UHMWPE Seats
-24-	Graphite Packing, Spiral Wound Graphite Body Seal, RPTFE Bearing (API 607, 6th Edition, ISO 10497:2010)
-35-	PTFE Seats and Seals
-49-	No Lubrication. Assembled Dry
-57-	Oxygen Cleaned
-65-	MPTFE Seats and Graphite Packing (Fire Safe)
-69-	Drilled and Tapped Purge Ports with Plugs
-70-	4" Extended Bonnet (8" Only)
-77-	Live Loaded (Gear, Actuator)
-80-	TFM 1600 Seats, PTFE Chevron Packing, Spiral Wound PTFE Body Seal, PEEK Bearing
-82-	Flat Face Flanges
-90-	Double Packed 4" Extended Bonnet
-9P-	Double Packed 4" Extended Bonnet with Monitoring Port
-CE-	CE Marking. See Page D-3 "Product Approvals" for Availability
-EF-	Graphite Packing (API 641 Compliant)
-EP-	Garlock EVSP Stem Packing with Spiral Wound Graphite Gasket (Fire Safe by Design)
-KF-	PCTFE Stem Bearing
-MG-	Gear Operator with Standard Handwheel
-MH-	Gear Operator with Standard Handwheel & Locking Device
-MJ-	Gear Operator with Oversize Handwheel
-MK-	Gear Operator with Oversize Handwheel & Locking Device
-MP-	Positive Material Identification
-TC-	With Test Certificate
-TD-	Tested to API Spec 6D
-UA-	AIS (American Iron & Steel) Compliant
-UL-	UL & CSA Listed (with Markings)
-ZP1-	Fugitive Emissions Packing (Viton)
-ZP2-	Fugitive Emissions Packing (Buna-N)
-ZP3-	Fugitive Emissions Packing (Kalrez)

Pressure/Temperature Ratings - Page M-31, Graph No. 47

DIMENSIONS

PART NO.	SIZE	A	B	C	D	E	F	G
87A-60E-01	8"	8.00	19.75	9.38	12.83	9.56	1.00	10.22
87A-60G-01	10"	10.00	22.38	10.95	18.57	11.33	2.31	12.80
87A-60H-01	12"	12.00	25.50	12.84	20.31	13.40	2.31	14.92

aalberts integrated piping systems

87H-700 SERIES

HASTELLOY C ASME CLASS 300 FLANGED STD. PORT BALL VALVE
1-1/2" THRU 2"

5 YEAR WARRANTY MADE IN USA

FOR STANDARDS COMPLIANCE AND STANDARD FEATURES REFER TO PAGE D-3.

STANDARD MATERIAL LIST

	PART	MATERIAL
1	Body	ASTM A494-CW12MW
2	Retainer	ASTM A494-CW12MW
3	Ball	ASTM B574-C276
4	Stem	ASTM B574-C276
5	Packing Gland	ASTM B574-C276
6	Stem Seals	PTFE
7	Seats	TFM 1700
8	Gland Screws	ASTM A193 B8 Class 1
9	Gland Plate	302 & 304 Stainless Steel
10	Stem Nut	316 Stainless Steel
11	Lever	302 & 304 Stainless Steel with Vinyl Grip
12	Stem Bearing	RPTFE
13	Stop	ASTM A276 Type 316
14	Stop Screw	18-8 Stainless Steel
15	Lock Plate	302 or 304 Stainless Steel
16	Body Seal	RPTFE
17	Lockwasher	302 or 304 Stainless Steel
18	Grounding Spring	Hastelloy C

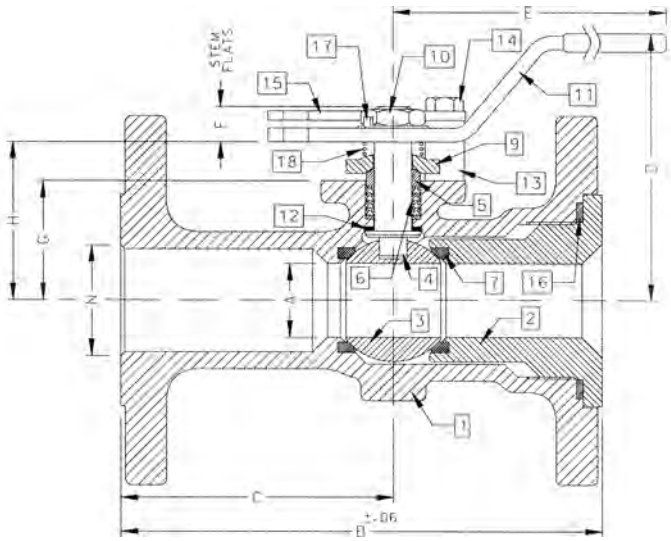

ACTUATOR MOUNTING

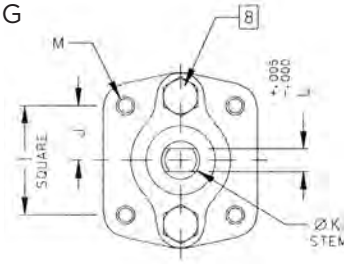

OPTIONS AVAILABLE

(MORE INFORMATION IN SECTION J)

- Minimum quantities apply.
- To specify an option, replace the "01" standard suffix with the suffix of the option.
- To specify multiple options, replace the "01" suffix with the desired suffixes in the numerical order shown below. NOTE: Not all suffixes can be combined together.

(SUFFIX)	OPTION
-01	Standard Configuration
-04-	2-1/4" Stem Extension (Carbon Steel, Zinc Plated)
-14-	Side Vented Ball (See Page J-2)
-15-	Wheel Handle, Steel
-21-	UHMWPE Seats
-24-	Graphite Packing, Spiral Wound Graphite Body Seal, RPTFE Bearing (API 607, 6th Edition, ISO 10497:2010)
-35-	PTFE Seats and Seals
-38-	PEEK Seats and Graphite Packing
-49-	No Lubrication. Assembled Dry
-57-	Oxygen Cleaned
-65-	MPTFE Seats and Graphite Packing (Fire Safe)
-69-	Drilled and Tapped Purge Ports with Plugs
-70-	4" Extended Bonnet
-73-	316 Stainless Steel Spiral Wound Gaskets with PTFE Filler
-76-	Live Loaded (Lever)
-77-	Live Loaded (Gear, Actuator)
-80-	TFM 1600 Seats, PTFE Chevron Packing, Spiral Wound PTFE Body Seal, PEEK Bearing
-82-	Flat Face Flanges
-90-	Double Packed 4" Extended Bonnet
-9P-	Double Packed 4" Extended Bonnet with Monitoring Port
-CE-	CE Marking. See Page D-3 "Product Approvals" for Availability
-EF-	Graphite Packing (API 641 Compliant)
-EP-	Garlock EVSP Stem Packing with Spiral Wound Graphite Gasket (Fire Safe by Design)
-KF-	PCTFE Stem Bearing
-MP-	Positive Material Identification
-TC-	With Test Certificate
-TD-	Tested to API Spec 6D
-UA-	AIS (American Iron & Steel) Compliant
-UL-	UL & CSA Listed (with Markings)
-ZP1-	Fugitive Emissions Packing (Viton)
-ZP2-	Fugitive Emissions Packing (Buna-N)
-ZP3-	Fugitive Emissions Packing (Kalrez)

Pressure/Temperature Ratings - Page M-32, Graph No. 49

DIMENSIONS

PART NO.	SIZE	A	B	C	D	E	F	G	H	I	J	K	L	M	N	WT.
87H-707-01A	1-1/2"	1.25	7.50	4.50	4.85	6.53	0.47	1.85	2.38	1.392	0.696	0.500	0.287	1/4-20	1.50	15.7
87H-708-01	2"	1.50	8.50	5.19	4.62	6.65	0.72	2.41	3.09	1.949	0.974	0.625	0.412	5/16-18	2.00	24.0

87H-700 SERIES

HASTELLOY C ASME CLASS 300 FLANGED STD. PORT BALL VALVE
2-1/2" THRU 3"

5 YEAR WARRANTY MADE IN USA

FOR STANDARDS COMPLIANCE AND STANDARD FEATURES REFER TO PAGE D-3.

STANDARD MATERIAL LIST

	PART	MATERIAL
1	Body	ASTM A494-CW12MW
2	Retainer	ASTM A494-CW12MW
3	Ball	ASTM B574-C276
4	Stem	ASTM B574-C276
5	Packing Gland	ASTM B574-C276
6	Stem Seals	PTFE
7	Seats	TFM 1700
8	Gland Screws	ASTM A193 B8 Class 1
9	Gland Plate	316 Stainless Steel
10	Stem Nut	18-8 Stainless Steel
11	Lever	316 with Vinyl Grip
12	Stem Bearing	RPTFE
13	Stop	ASTM A276 Type 316
14	Stop Screw	316 Stainless Steel
15	Lock Plate	302 or 304 Stainless Steel
16	Body Seal	RPTFE
17	Grounding Spring	Hastelloy C
18	Body Joint Stud	ASTM A193 Grade B8M
19	Body Joint Nut	ASTM A194 Grade 8
20	Lockwasher	302 or 304 Stainless Steel

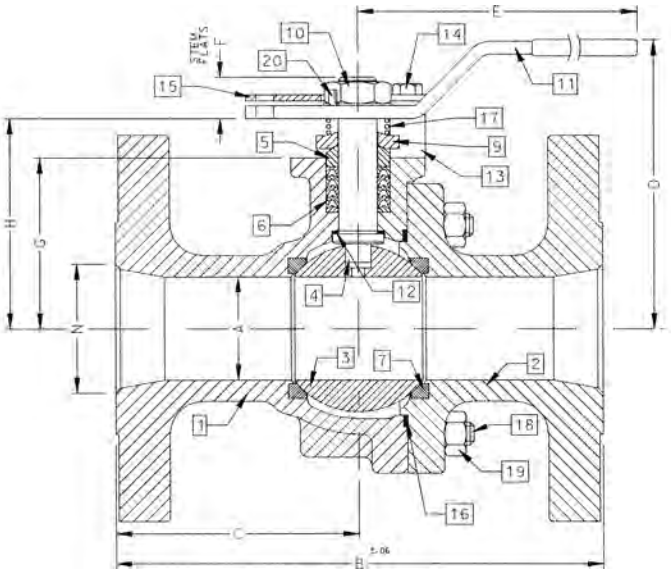

ACTUATOR MOUNTING

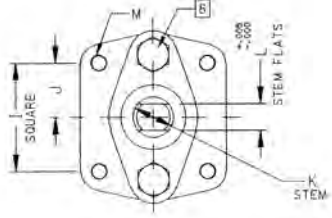

OPTIONS AVAILABLE

(MORE INFORMATION IN SECTION J)

- Minimum quantities apply.
- To specify an option, replace the "01" standard suffix with the suffix of the option.
- To specify multiple options, replace the "01" suffix with the desired suffixes in the numerical order shown below. NOTE: Not all suffixes can be combined together.

(SUFFIX)	OPTION
-01	Standard Configuration
-04-	2-1/4" Stem Extension (Carbon Steel, Zinc Plated) (2-1/2" only)
-14-	Side Vented Ball (Uni-Directional)
-21-	UHMWPE Seats
-24-	Graphite Packing, Spiral Wound Graphite Body Seal, RPTFE Bearing (API 607, 6th Edition, ISO 10497:2010)
-35-	PTFE Seats and Seals
-38-	PEEK Seats and Graphite Packing
-49-	No Lubrication. Assembled Dry
-57-	Oxygen Cleaned
-65-	MPTFE Seats and Graphite Packing (Fire Safe)
-69-	Drilled and Tapped Purge Ports with Plugs
-70-	4" Extended Bonnet
-73-	316 Stainless Steel Spiral Wound Gaskets with PTFE Filler
-76-	Live Loaded (Lever)
-77-	Live Loaded (Gear, Actuator)
-80-	TFM 1600 Seats, PTFE Chevron Packing, Spiral Wound PTFE Body Seal, PEEK Bearing
-82-	Flat Face Flanges
-90-	Double Packed 4" Extended Bonnet
-9P-	Double Packed 4" Extended Bonnet with Monitoring Port
-CE-	CE Marking. See Page D-3 "Product Approvals" for Availability
-EF-	Graphite Packing (API 641 Compliant)
-EP-	Garlock EVSP Stem Packing with Spiral Wound Graphite Gasket (Fire Safe by Design)
-KF-	PCTFE Stem Bearing
-MG-	Gear Operator with Standard Handwheel
-MH-	Gear Operator with Standard Handwheel & Locking Device
-MJ-	Gear Operator with Oversize Handwheel
-MK-	Gear Operator with Oversize Handwheel & Locking Device
-MP-	Positive Material Identification
-TC-	With Test Certificate
-TD-	Tested to API Spec 6D
-UA-	AIS (American Iron & Steel) Compliant
-UL-	UL & CSA Listed (with Markings)
-ZP1-	Fugitive Emissions Packing (Viton)
-ZP2-	Fugitive Emissions Packing (Buna-N)
-ZP3-	Fugitive Emissions Packing (Kalrez)

Pressure/Temperature Ratings - Page M-32, Graph No. 49

DIMENSIONS

PART NO.	SIZE	A	B	C	D	E	F	G	H	I	J	K	L	M	N	WT.
87H-709-01	2-1/2"	2.00	9.50	4.75	5.61	8.41	0.80	3.31	4.08	1.949	0.974	0.750	0.477	5/16-18	2.50	39
87H-700-01	3"	2.50	11.12	5.56	6.24	8.41	0.80	3.94	4.71	1.949	0.974	0.750	0.477	5/16-18	3.00	55

aalberts integrated piping systems

87H-700 SERIES

HASTELLOY C ASME CLASS 300 FLANGED STD. PORT BALL VALVE
4" THRU 8"

5 YEAR WARRANTY MADE IN USA

FOR STANDARDS COMPLIANCE AND STANDARD FEATURES REFER TO PAGE D-3.

STANDARD MATERIAL LIST

	PART	MATERIAL
1	Body	ASTM A494-CW12MW
2	Retainer	ASTM A494-CW12MW
3	Ball	ASTM B574-C276
4	Stem	ASTM B574-C276
5	Packing Gland	ASTM B574-C276
6	Stem Seals	PTFE
7	Seats	TFM 1700
8	Gland Screws	ASTM A193 B8 Class 1
9	Gland Plate	316 Stainless Steel
10	Adapter Screw	18-8 Stainless Steel
11	Handle Adapter	316 Stainless Steel
12	Stem Bearing	RPTFE
13	Stop	ASTM A276 Type 316
14	Stop Screw	316 Stainless Steel
15	Lock Plate	302 or 304 Stainless Steel
16	Body Seal	RPTFE
17	Grounding Spring	Hastelloy C
18	Body Joint Stud	ASTM A193 Grade B8M
19	Body Joint Nut	ASTM A194 Grade 8
20	Adapter Screw	18-8 Stainless Steel
21	Pipe Handle	Galvanized Steel (not shown)

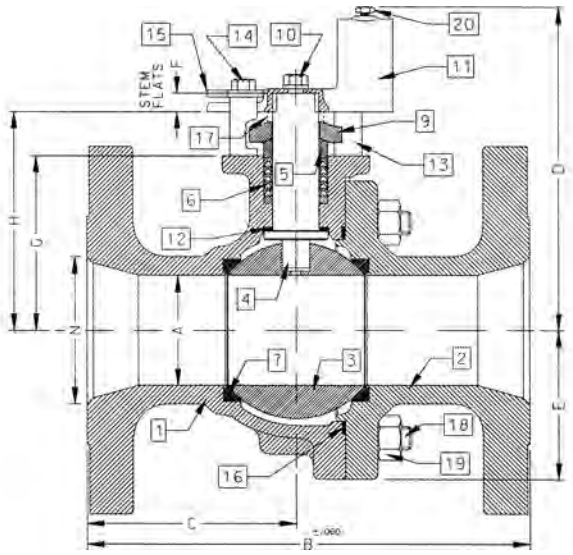

ACTUATOR MOUNTING

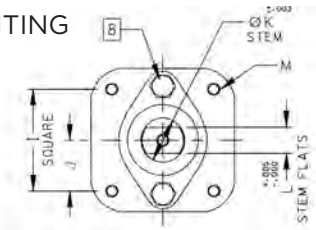

OPTIONS AVAILABLE

(MORE INFORMATION IN SECTION J)

- Minimum quantities apply.
- To specify an option, replace the "01" standard suffix with the suffix of the option.
- To specify multiple options, replace the "01" suffix with the desired suffixes in the numerical order shown below. NOTE: Not all suffixes can be combined together.

(SUFFIX)	OPTION
-01	Standard Configuration
-14-	Side Vented Ball (Uni-Directional)
-21-	UHMWPE Seats
-24-	Graphite Packing, Spiral Wound Graphite Body Seal, RPTFE Bearing (API 607, 6th Edition, ISO 10497:2010)
-35-	PTFE Seats and Seals
-49-	No Lubrication. Assembled Dry
-57-	Oxygen Cleaned
-65-	MPTFE Seats and Graphite Packing (Fire Safe)
-69-	Drilled and Tapped Purge Ports with Plugs
-70-	4" Extended Bonnet
-73-	316 Stainless Steel Spiral Wound Gaskets with PTFE Filler
-76-	Live Loaded (Lever)
-77-	Live Loaded (Gear, Actuator)
-80-	TFM 1600 Seats, PTFE Chevron Packing, Spiral Wound PTFE Body Seal, PEEK Bearing
-82-	Flat Face Flanges
-90-	Double Packed 4" Extended Bonnet
-9P-	Double Packed 4" Extended Bonnet with Monitoring Port
-CE-	CE Marking. See Page D-3 "Product Approvals" for Availability
-EF-	Graphite Packing (API 641 Compliant)
-EP-	Garlock EVSP Stem Packing with Spiral Wound Graphite Gasket (Fire Safe by Design)
-KF-	PCTFE Stem Bearing
-MG-	Gear Operator with Standard Handwheel
-MH-	Gear Operator with Standard Handwheel & Locking Device
-MJ-	Gear Operator with Oversize Handwheel
-MK-	Gear Operator with Oversize Handwheel & Locking Device
-MP-	Positive Material Identification
-TC-	With Test Certificate
-TD-	Tested to API Spec 6D
-UA-	AIS (American Iron & Steel) Compliant
-UL-	UL & CSA Listed (with Markings)
-ZP1-	Fugitive Emissions Packing (Viton)
-ZP2-	Fugitive Emissions Packing (Buna-N)
-ZP3-	Fugitive Emissions Packing (Kalrez)

Pressure/Temperature Ratings - Page M-32, Graph No. 49

DIMENSIONS

PART NO.	SIZE	A	B	C	D	E	F	G	H	I	J	K	L	M	N	WT.
87H-70A-01	4"	3.00	12.00	5.68	8.80	4.06	0.50	4.75	5.95	2.840	1.420	1.250	0.725	3/8-16	4.00	95
87H-70C-01	6"	4.00	15.88	7.38	9.99	5.25	0.50	5.94	7.13	2.840	1.420	1.250	0.725	3/8-16	6.00	187
87H-70E-01	8"	6.00	19.75	9.00	13.73	7.30	1.00	7.75	9.48	4.596	2.298	2.000	1.375	3/4-10	8.00	400

87A-700 SERIES

HASTELLOY C ASME CLASS 300 FLANGED STD. PORT BALL VALVE
10"

5 YEAR WARRANTY MADE IN USA

FOR STANDARDS COMPLIANCE AND STANDARD FEATURES REFER TO PAGE D-3.

STANDARD MATERIAL LIST

	PART	MATERIAL
1	Body	ASTM A494-CW12MW
2	Retainer	ASTM A494-CW12MW
3	Ball	ASTM B574-C276
4	Stem	ASTM B574-C276
5	Packing Gland	ASTM B574-C276
6	Stem Seals	PTFE
7	Seats	TFM 1700
8	Gland Screws	ASTM A193 B8 Class 1
9	Gland Plate	316 Stainless Steel
10	Stem Bearing	RPTFE
11	Body Seal	RPTFE
12	Body Joint Stud	ASTM A193 Grade B8M
13	Body Joint Nut	ASTM A194 Grade 8

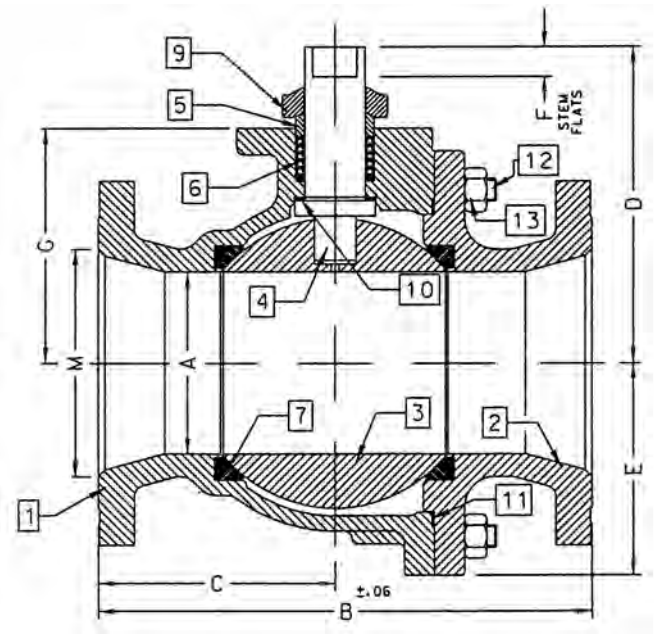

ACTUATOR MOUNTING

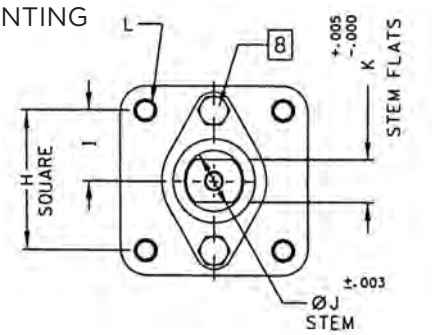

OPTIONS AVAILABLE

(MORE INFORMATION IN SECTION J)

- Minimum quantities apply.
- To specify an option, replace the "01" standard suffix with the suffix of the option.
- To specify multiple options, replace the "01" suffix with the desired suffixes in the numerical order shown below. NOTE: Not all suffixes can be combined together.

(SUFFIX)	OPTION
-01	Standard Configuration (Less Gear Operator)
-14-	Side Vented Ball (See Page J2)
-21-	UHMWPE Seats
-24-	Graphite Packing, Spiral Wound Graphite Body Seal, RPTFE Bearing (API 607, 6th Edition, ISO 10497:2010)
-35-	PTFE Seats and Seals
-49-	No Lubrication. Assembled Dry
-57-	Oxygen Cleaned
-65-	MPTFE Seats and Graphite Packing (Fire Safe)
-69-	Drilled and Tapped Purge Ports with Plugs
-70-	4" Extended Bonnet
-77-	Live Loaded 87A/88A Series (Gear, Actuator)
-80-	TFM 1600 Seats, PTFE Chevron Packing, Spiral Wound PTFE Body Seal PEEK Bearing
-82-	Flat Face Flanges
-90-	Double Packed 4" Extended Bonnet
-9P-	Double Packed 4" Extended Bonnet with Monitoring Port
-CE-	CE Marking. See Page D-3 "Product Approvals" for Availability
-EF-	Graphite Packing (API 641 Compliant)
-EP-	Garlock EVSP Stem Packing with Spiral Wound Graphite Gasket (Fire Safe by Design)
-KF-	PCTFE Stem Bearing
-MG-	Gear Operator with Standard Handwheel
-MH-	Gear Operator with Standard Handwheel & Locking Device
-MJ-	Gear Operator with Oversize Handwheel
-MK-	Gear Operator with Oversize Handwheel & Locking Device
-MP-	Positive Material Identification
-TC-	With Test Certificate
-TD-	Tested to API Spec 6D
-UA-	AIS (American Iron & Steel) Compliant
-UL-	UL & CSA Listed (with Markings)
-ZP1-	Fugitive Emissions Packing (Viton)
-ZP2-	Fugitive Emissions Packing (Buna-N)
-ZP3-	Fugitive Emissions Packing (Kalrez)

Pressure/Temperature Ratings - Page M-32, Graph No. 49

DIMENSIONS

PART NO.	SIZE	A	B	C	D	E	F	G	H	I	J	K	L	M
87H-70G-01	10"	8.00	22.38	10.69	12.83	9.56	1.00	10.22	4.596	2.298	2.000	1.375	3/4-10	10.00

aalberts integrated piping systems

87H-900 SERIES

HASTELLOY C ASME CLASS 300 FLANGED FULL PORT BALL VALVE
1/2" THRU 1"

5 YEAR WARRANTY MADE IN USA

FOR STANDARDS COMPLIANCE AND STANDARD FEATURES REFER TO PAGE D-3.

STANDARD MATERIAL LIST

	PART	MATERIAL
1	Body	ASTM A494-CW12MW
2	Retainer	ASTM A494-CW12MW
3	Ball	ASTM B574-C276
4	Stem	ASTM B574-C276
5	Packing Gland	ASTM B574-C276
6	Stem Seals	PTFE
7	Seats	TFM 1700
8	Gland Screws	ASTM A193 B8 Class 1
9	Gland Plate	302 or 304 Stainless Steel
10	Stem Nut	316 Stainless Steel
11	Lever	302 or 304 with Vinyl Grip
12	Stem Bearing	RPTFE
13	Stop	ASTM A276 Type 316
14	Stop Screw	18-8 Stainless Steel
15	Lock Plate	302 or 304 Stainless Steel
16	Body Seal	RPTFE
17	Lockwasher	302 or 304 Stainless Steel
18	Grounding Spring	Hastelloy C

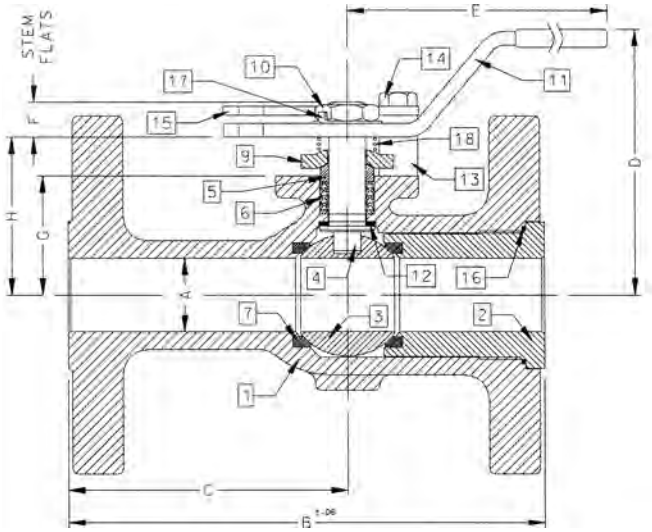

ACTUATOR MOUNTING

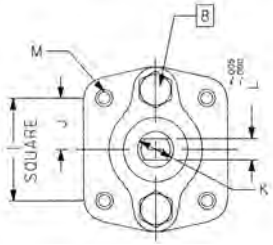

OPTIONS AVAILABLE

(MORE INFORMATION IN SECTION J)

- Minimum quantities apply.
- To specify an option, replace the "01" standard suffix with the suffix of the option.
- To specify multiple options, replace the "01" suffix with the desired suffixes in the numerical order shown below. NOTE: Not all suffixes can be combined together.

(SUFFIX)	OPTION
-01	Standard Configuration
-04-	2-1/4" Stem Extension (Carbon Steel, Zinc Plated)
-14-	Side Vented Ball (Uni-Directional)
-15-	Wheel Handle, Steel
-21-	UHMWPE Seats
-24-	Graphite Packing, Spiral Wound Graphite Body Seal, RPTFE Bearing (API 607, 6th Edition, ISO 10497:2010)
-35-	PTFE Seats and Seals
-38-	PEEK Seats and Graphite Packing
-49-	No Lubrication. Assembled Dry
-57-	Oxygen Cleaned
-65-	MPTFE Seats and Graphite Packing (Fire Safe)
-69-	Drilled and Tapped Purge Port with Plugs
-70-	4" Extended Bonnet
-73-	316 Stainless Steel Spiral Wound Gaskets with PTFE Filler
-76-	Live Loaded (Lever)
-77-	Live Loaded (Gear, Actuator)
-80-	TFM 1600 Seats, PTFE Chevron Packing, Spiral Wound PTFE Body Seal, PEEK Bearing
-82-	Flat Face Flanges
-90-	Double Packed 4" Extended Bonnet
-9P-	Double Packed 4" Extended Bonnet with Monitoring Port
-EF-	Graphite Packing (API 641 Compliant) (Not Available on 1/2" Size)
-CE-	CE Marking. See Page D-3 "Product Approvals" for Availability
-EP-	Garlock EVSP Stem Packing with Spiral Wound Graphite Gasket (Fire Safe by Design)
-KF-	PCTFE Stem Bearing
-MP-	Positive Material Identification
-TC-	With Test Certificate
-TD-	Tested to API Spec 6D
-UA-	AIS (American Iron & Steel) Compliant
-UL-	UL & CSA Listed (with Markings)
-ZP1-	Fugitive Emissions Packing (Viton)
-ZP2-	Fugitive Emissions Packing (Buna-N)
-ZP3-	Fugitive Emissions Packing (Kalrez)

Pressure/Temperature Ratings - Page M-32, Graph No. 49

DIMENSIONS

PART NO.	SIZE	A	B	C	D	E	F	G	H	I	J	K	L	M	WT.
87H-903-01A	1/2"	0.50	5.50	3.31	2.74	5.12	0.24	1.09	1.44	1.000	0.500	0.375	0.245	10-24	6
87H-904-01A	3/4"	0.75	6.00	3.56	3.43	5.54	0.22	1.65	2.13	1.392	0.696	0.500	0.287	1/4-20	9
87H-905-01	1"	1.00	6.50	3.82	4.62	6.53	0.47	1.62	2.15	1.392	0.696	0.500	0.287	1/4-20	11

87H-900 SERIES

HASTELLOY C ASME CLASS 300 FLANGED FULL PORT BALL VALVE
1-1/2" THRU 2-1/2"

5 YEAR WARRANTY MADE IN USA

FOR STANDARDS COMPLIANCE AND STANDARD FEATURES REFER TO PAGE D-3.

STANDARD MATERIAL LIST

	PART	MATERIAL
1	Body	ASTM A494-CW12MW
2	Retainer	ASTM A494-CW12MW
3	Ball	ASTM B574-C276
4	Stem	ASTM B574-C276
5	Packing Gland	ASTM B574-C276
6	Stem Seals	PTFE
7	Seats	TFM 1700
8	Gland Screws	ASTM A193 B8 Class 1
9	Gland Plate	316 Stainless Steel
10	Stem Nut	18-8 Stainless Steel
11	Lever	316 Stainless Steel
12	Stem Bearing	RPTFE
13	Stop	ASTM A276 Type 316
14	Stop Screw	316 Stainless Steel
15	Lock Plate	302 or 304 Stainless Steel
16	Body Seal	RPTFE
17	Grounding Spring	Hastelloy C
18	Body Joint Stud	ASTM A193 Grade B8M
19	Body Joint Nut	ASTM A194 Grade 8
20	Lockwasher	302 or 304 Stainless Steel

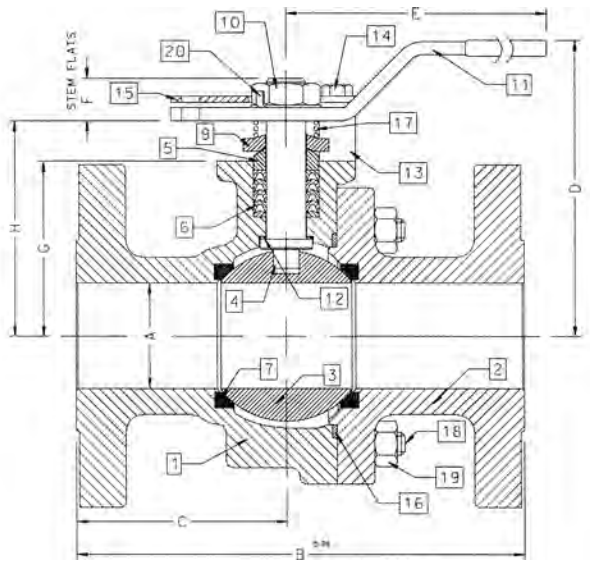

ACTUATOR MOUNTING

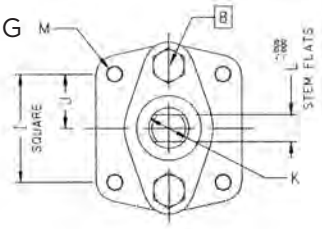

OPTIONS AVAILABLE

(MORE INFORMATION IN SECTION J)

- Minimum quantities apply.
- To specify an option, replace the "01" standard suffix with the suffix of the option.
- To specify multiple options, replace the "01" suffix with the desired suffixes in the numerical order shown below. NOTE: Not all suffixes can be combined together.

(SUFFIX)	OPTION
-01	Standard Configuration
-04-	2-1/4" Stem Extension (Carbon Steel, Zinc Plated)
-14-	Side Vented Ball (Uni-Directional)
-21-	UHMWPE Seats
-24-	Graphite Packing, Spiral Wound Graphite Body Seal, RPTFE Bearing (API 607, 6th Edition, ISO 10497:2010)
-35-	PTFE Seats and Seals
-38-	PEEK Seats and Graphite Packing (3" Only)
-49-	No Lubrication. Assembled Dry
-57-	Oxygen Cleaned
-65-	MPTFE Seats and Graphite Packing (Fire Safe)
-69-	Drilled and Tapped Purge Ports with Plugs
-70-	4" Extended Bonnet
-73-	316 Stainless Steel Spiral Wound Gaskets with PTFE Filler
-76-	Live Loaded (Lever)
-77-	Live Loaded (Gear, Actuator)
-80-	TFM 1600 Seats, PTFE Chevron Packing, Spiral Wound PTFE Body Seal, PEEK Bearing
-82-	Flat Face Flanges
-90-	Double Packed 4" Extended Bonnet
-9P-	Double Packed 4" Extended Bonnet with Monitoring Port
-CE-	CE Marking. See Page D-3 "Product Approvals" for Availability
-EF-	Graphite Packing (API 641 Compliant)
-EP-	Garlock EVSP Stem Packing with Spiral Wound Graphite Gasket (Fire Safe by Design)
-KF-	PCTFE Stem Bearing
-MG-	Gear Operator with Standard Handwheel
-MH-	Gear Operator with Standard Handwheel & Locking Device
-MJ-	Gear Operator with Oversize Handwheel
-MK-	Gear Operator with Oversize Handwheel & Locking Device
-MP-	Positive Material Identification
-TC-	With Test Certificate
-TD-	Tested to API Spec 6D
-UA-	AIS (American Iron & Steel) Compliant
-UL-	UL & CSA Listed (with Markings)
-ZP1-	Fugitive Emissions Packing (Viton)
-ZP2-	Fugitive Emissions Packing (Buna-N)
-ZP3-	Fugitive Emissions Packing (Kalrez)

Pressure/Temperature Ratings - Page M-32, Graph No. 49

DIMENSIONS

PART NO.	SIZE	A	B	C	D	E	F	G	H	I	J	K	L	M	WT.
87H-907-01	1-1/2"	1.50	7.50	3.50	4.62	6.65	0.72	2.41	3.09	1.949	0.974	0.625	0.412	5/16-18	21
87H-908-01	2"	2.00	8.50	4.00	5.61	8.41	0.80	3.31	4.08	1.949	0.974	0.750	0.477	5/16-18	37
87H-909-01	2-1/2"	2.50	9.50	4.44	6.24	8.41	0.80	3.94	4.71	1.949	0.974	0.750	0.477	5/16-18	57

REV. 18JUL19

aalberts integrated piping systems

87H-900 SERIES

HASTELLOY C ASME CLASS 300 FLANGED FULL PORT BALL VALVE
3" THRU 6"

5 YEAR WARRANTY MADE IN USA

FOR STANDARDS COMPLIANCE AND STANDARD FEATURES REFER TO PAGE D-3.

STANDARD MATERIAL LIST

	PART	MATERIAL
1	Body	ASTM A494-CW12MW
2	Retainer	ASTM A494-CW12MW
3	Ball	ASTM B574-C276
4	Stem	ASTM B574-C276
5	Packing Gland	ASTM B574-C276
6	Stem Seals	PTFE
7	Seats	TFM 1700
8	Gland Screws	ASTM A193 B8 Class 1
9	Gland Plate	316 Stainless Steel
10	Adapter Screw	18-8 Stainless Steel
11	Handle Adapter	316 Stainless Steel
12	Stem Bearing	RPTFE
13	Stop	ASTM A276 Type 316
14	Stop Screw	316 Stainless Steel
15	Lock Plate	302 or 304 Stainless Steel
16	Body Seal	RPTFE
17	Grounding Spring	Hastelloy C
18	Body Joint Stud	ASTM A193 Grade B8M
19	Body Joint Nut	ASTM A194 Grade 8
20	Pipe Handle	Galvanized Steel (not shown)

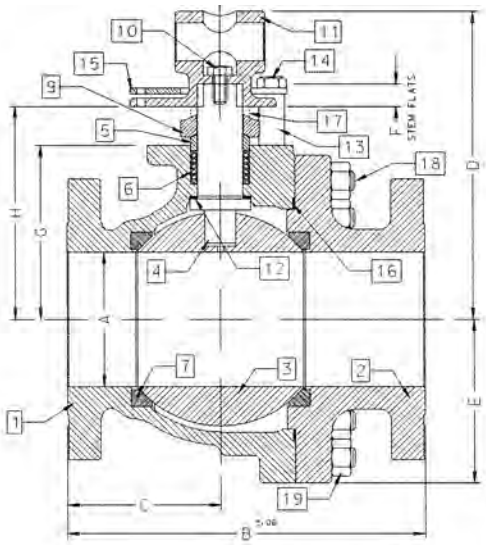

ACTUATOR MOUNTING

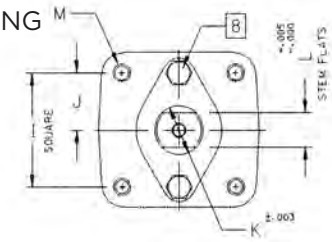

OPTIONS AVAILABLE

(MORE INFORMATION IN SECTION J)

- Minimum quantities apply.
- To specify an option, replace the "01" standard suffix with the suffix of the option.
- To specify multiple options, replace the "01" suffix with the desired suffixes in the numerical order shown below. NOTE: Not all suffixes can be combined together.

(SUFFIX)	OPTION
-01	Standard Configuration
-14-	Side Vented Ball (Uni-Directional)
-21-	UHMWPE Seats
-24-	Graphite Packing, Spiral Wound Graphite Body Seal, RPTFE Bearing (API 607, 6th Edition, ISO 10497:2010)
-35-	PTFE Seats and Seals
-38-	PEEK Seats and Graphite Packing (3" Only)
-49-	No Lubrication. Assembled Dry
-57-	Oxygen Cleaned
-65-	MPTFE Seats and Graphite Packing (Fire Safe)
-69-	Drilled and Tapped Purge Port with Plugs
-70-	4" Extended Bonnet
-73-	316 Stainless Steel Spiral Wound Gaskets with PTFE Filler
-76-	Live Loaded (Lever)
-77-	Live Loaded (Gear, Actuator)
-80-	TFM 1600 Seats, PTFE Chevron Packing, Spiral Wound PTFE Body Seal, PEEK Bearing
-82-	Flat Face Flanges
-90-	Double Packed 4" Extended Bonnet
-9P-	Double Packed 4" Extended Bonnet with Monitoring Port
-CE-	CE Marking. See Page D-3 "Product Approvals" for Availability
-EF-	Graphite Packing (API 641 Compliant)
-EP-	Garlock EVSP Stem Packing with Spiral Wound Graphite Gasket (Fire Safe by Design)
-KF-	PCTFE Stem Bearing
-MG-	Gear Operator with Standard Handwheel
-MH-	Gear Operator with Standard Handwheel & Locking Device
-MJ-	Gear Operator with Oversize Handwheel
-MK-	Gear Operator with Oversize Handwheel & Locking Device
-MP-	Positive Material Identification
-TC-	With Test Certificate
-TD-	Tested to API Spec 6D
-UA-	AIS (American Iron & Steel) Compliant
-UL-	UL & CSA Listed (with Markings)
-ZP1-	Fugitive Emissions Packing (Viton)
-ZP2-	Fugitive Emissions Packing (Buna-N)
-ZP3-	Fugitive Emissions Packing (Kalrez)

Pressure/Temperature Ratings - Page M-32, Graph No. 49

DIMENSIONS

PART NO.	SIZE	A	B	C	D	E	F	G	H	I	J	K	L	M	WT.
87H-900-01	3"	3.00	11.12	5.24	8.80	4.06	0.50	4.75	5.95	2.840	1.420	1.250	0.725	3/8-16	78
87H-90A-01	4"	4.00	12.00	5.44	9.99	5.25	0.50	5.94	7.13	2.840	1.420	1.250	0.725	3/8-16	133
87H-90C-01	6"	6.00	15.88	6.82	13.73	7.30	1.00	7.75	9.48	4.596	2.298	2.000	1.375	3/4-10	329

REV. 18JUL19

87H-900 SERIES

HASTELLOY C ASME CLASS 300 FLANGED FULL PORT BALL VALVE
8" THRU 12"

5 YEAR WARRANTY MADE IN USA

FOR STANDARDS COMPLIANCE AND STANDARD FEATURES REFER TO PAGE D-3.

STANDARD MATERIAL LIST

	PART	MATERIAL
1	Body	ASTM A494-CW12MW
2	Retainer	ASTM A494-CW12MW
3	Ball	ASTM B574-C276
4	Stem	ASTM B574-C276
5	Packing Gland	ASTM B574-C276
6	Stem Seals	PTFE
7	Seats	TFM 1700
8	Gland Screws	ASTM A193 B8 Class 1
9	Gland Plate	316 Stainless Steel
10	Stem Bearing	RPTFE
11	Body Seal	RPTFE
12	Body Joint Stud	ASTM A193 Grade B8M
13	Body Joint Nut	ASTM A194 Grade 8

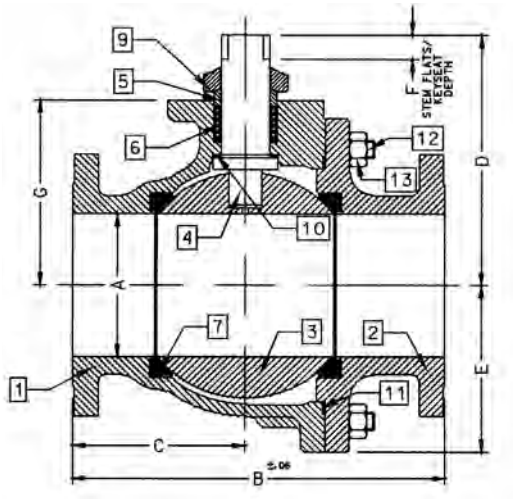

ACTUATOR MOUNTING

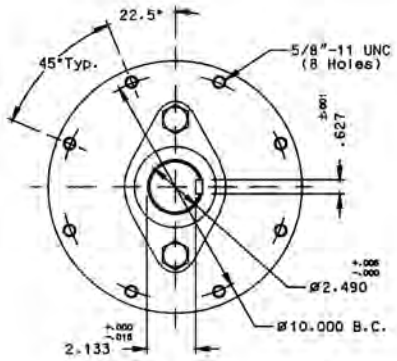

10" & 12"

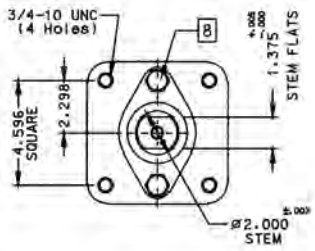

8"

OPTIONS AVAILABLE

(MORE INFORMATION IN SECTION J)

- Minimum quantities apply.
- To specify an option, replace the "01" standard suffix with the suffix of the option.
- To specify multiple options, replace the "01" suffix with the desired suffixes in the numerical order shown below. NOTE: Not all suffixes can be combined together.

(SUFFIX)	OPTION
-01	Standard Configuration
-14-	Side Vented Ball (Uni-Directional)
-21-	UHMWPE Seats
-24-	Graphite Packing, Spiral Wound Graphite Body Seal, RPTFE Bearing (API 607, 6th Edition, ISO 10497:2010)
-35-	PTFE Seats and Seals
-49-	No Lubrication. Assembled Dry
-57-	Oxygen Cleaned
-65-	MPTFE Seats and Graphite Packing (Fire Safe)
-69-	Drilled and Tapped Purge Ports with Plugs
-70-	4" Extended Bonnet (8" Only)
-77-	Live Loaded (Gear, Actuator)
-80-	TFM 1600 Seats, PTFE Chevron Packing, Spiral Wound PTFE Body Seal, PEEK Bearing
-82-	Flat Face Flanges
-90-	Double Packed 4" Extended Bonnet
-9P-	Double Packed 4" Extended Bonnet with Monitoring Port
-CE-	CE Marking. See Page D-3 "Product Approvals" for Availability
-EF-	Graphite Packing (API 641 Compliant)
-EP-	Garlock EVSP Stem Packing with Spiral Wound Graphite Gasket (Fire Safe by Design)
-KF-	PCTFE Stem Bearing
-MG-	Gear Operator with Standard Handwheel
-MH-	Gear Operator with Standard Handwheel & Locking Device
-MJ-	Gear Operator with Oversize Handwheel
-MK-	Gear Operator with Oversize Handwheel & Locking Device
-MP-	Positive Material Identification
-TC-	With Test Certificate
-TD-	Tested to API Spec 6D
-UA-	AIS (American Iron & Steel) Compliant
-UL-	UL & CSA Listed (with Markings)
-ZP1-	Fugitive Emissions Packing (Viton)
-ZP2-	Fugitive Emissions Packing (Buna-N)
-ZP3-	Fugitive Emissions Packing (Kalrez)

Pressure/Temperature Ratings - Page M-32, Graph No. 49

DIMENSIONS

PART NO.	SIZE	A	B	C	D	E	F	G
87H-90E-01	8"	8.00	19.75	9.38	12.83	9.56	1.00	10.22
87H-90G-01	10"	10.00	22.38	10.95	18.57	11.33	2.31	12.80
87H-90H-01	12"	12.00	25.50	12.84	20.31	13.40	2.31	14.92

aalberts integrated piping systems

87A-F00 SERIES

STAINLESS STEEL ASME CLASS 600 FLANGED FULL PORT BALL VALVE
1”

5 YEAR WARRANTY MADE IN USA

FOR STANDARDS COMPLIANCE AND STANDARD FEATURES REFER TO PAGE D-3.

STANDARD MATERIAL LIST

	PART	MATERIAL
1	Body	ASTM A351-CF8M
2	Retainer	ASTM A276 Type 316
3	Ball	ASTM A351-CF8M or ASTM A276 Type 316
4	Stem	ASTM A276 Type 316
5	Seats	Defined by Seat Suffix Selected See “95” or “80” also “38” & “21”
6	Body Seal	Defined by Seat Suffix Selected
7	Stem Seals	Defined by Seat Suffix Selected
8	Stem Bearing	Defined by Seat Suffix Selected
9	Grounding Spring	316 Stainless Steel
10	Grounding Spring	316 Stainless Steel
11	Packing Gland	ASTM A276 Type 316
12	Stem Screw	Steel Zinc Plated
13	Lever & Grip	316 Stainless Steel with Vinyl Grip
14	Gland Plate	316 Stainless Steel
15	Stops	ASTM A276 Type 316
16	Lock Plate	302 or 304 Stainless Steel
17	Spacer	ASTM A276 type 316
18	Stop Screws	316 Stainless Steel
19	Gland Plate Screws	ASTM A193-B8

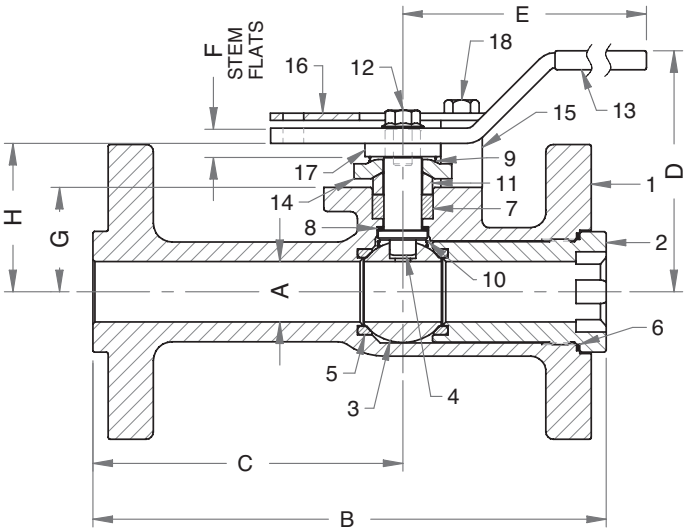

ACTUATOR MOUNTING

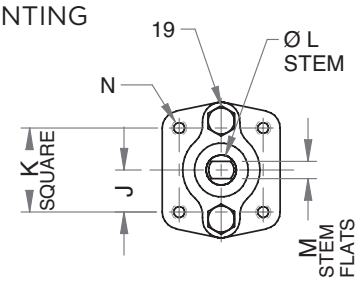

OPTIONS AVAILABLE

(MORE INFORMATION IN SECTION J)

- Complete the product number by adding a suffix (or multiple suffixes) to the base product number. A suffix for seat & seal materials must be selected.
- To specify multiple options, add the desired suffixes in the numerical order shown below. NOTE: Not all suffixes can be combined together.
- Minimum quantities may apply.

(SUFFIX)	OPTION
-04-	2-1/4” Stem Extension (Carbon Steel, Zinc Plated) (1” - 2”)
-14-	Side Vented Ball (Uni-Directional)
-21-	UHMWPE Seats, Graphite Packing, Spiral Wound Graphite Body Seal, PEEK Bearing
-24-	Graphite Packing, Spiral Wound Graphite Body Seal, RPTFE Bearing (API 607, 6th Edition, ISO 10497:2010)
-38-	PEEK Seats, Graphite Packing, Spiral Wound Graphite Body Seal, PEEK Bearing
-45-	Less Lever and Nut (Bare Stem)
-49-	No Lubrication. Assembled Dry
-57-	Oxygen Cleaned
-69-	Drilled & Tapped Purge Port with Plugs
-70-	4” Extended Bonnet
-76-	Live Loaded (Lever)
-77-	Live Loaded (Gear, Actuator)
-80-	TFM 1600 Seats, PTFE Chevron Packing, Spiral Wound PTFE Body Seal, PEEK Bearing
-82-	Flat Face Flanges
-90-	Double Packed 4” Extended Bonnet
-95-	Devlon® Seats, Graphite Packing, Spiral Wound Graphite Body Seal, PEEK Bearing
-9P-	Double Packed 4” Extended Bonnet with Monitoring Port
-CE-	CE Marking. See Page D-3 “Product Approvals” for Availability
-EF-	Graphite Packing (API 641 Compliant)
-EP-	Garlock EVSP Stem Packing with Spiral Wound Graphite Gasket (Fire Safe by Design)
-KB-	Kolsterised Ball
-MG-	Gear Operator with Standard Handwheel
-MH-	Gear Operator with Standard Handwheel & Locking Device
-MJ-	Gear Operator with Oversize Handwheel
-MK-	Gear Operator with Oversize Handwheel & Locking Device
-MP-	Positive Material Indentification
-PH-	17-4 PH Stem
-TC-	Hydrostatic Test with Certified Report
-TD-	API 6D Test (Hydrostatic Testing)
-TR-	Hydrostatic Test with Certified Report & MTR
-TW-	Hydrostatic Test with Certified Report & Witnessed
-ZP1-	Fugitive Emissions Packing (Viton)
-ZP2-	Fugitive Emissions Packing (Buna-N)
-ZP3-	Fugitive Emissions Packing (Kalrez)

Pressure/Temperature Ratings - Page M-25, Graph No. 34

DIMENSIONS

PART NO.	SIZE	A	B	C	D	E	F	G	H	J	K	L	M	N	WT.
87A-F05-XX	1”	1.00	8.50	5.13	3.99	6.65	0.45	a1.730	2.460	0.98	1.95	0.625	0.412	5/16-18	13.0

REV. 08JUL19

87A-F00 SERIES

STAINLESS STEEL ASME CLASS 600 FLANGED FULL PORT BALL VALVE
1-1/2" THRU 2-1/2"

5 YEAR WARRANTY MADE IN USA

FOR STANDARDS COMPLIANCE AND STANDARD FEATURES REFER TO PAGE D-3.

STANDARD MATERIAL LIST

	PART	MATERIAL
1	Body	ASTM A351-CF8M
2	Retainer	ASTM A351-CF8M
3	Ball	ASTM A351-CF8M or ASTM A276 Type 316
4	Stem	ASTM A276 Type 316
5	Seats	Defined by Seat Suffix Selected See "95" or "80" also "38" & "21"
6	Body Seal	Defined by Seat Suffix Selected
7	Stem Seals	Defined by Seat Suffix Selected
8	Stem Bearing	Defined by Seat Suffix Selected
9	Grounding Spring	316 Stainless Steel
10	Grounding Spring	316 Stainless Steel
11	Packing Gland	ASTM A276 Type 316
12	Stem Nut	ASTM A194 Grade 8
13	Lever & Grip	316 Stainless Steel with Vinyl Grip
14	Gland Plate	316 Stainless Steel
15	Stops	ASTM A276 Type 316
16	Lock Plate	302 or 304 Stainless Steel
17	Stop Screws	18-8 Stainless Steel
18	Gland Plate Screws	ASTM A193-B8
19	Body Joint Stud	ASTM A193-B8 Grade B8M
20	Body Joint Nut	ASTM A194-Grade 8
21	Lock Washer	302 or 304 Stainless Steel

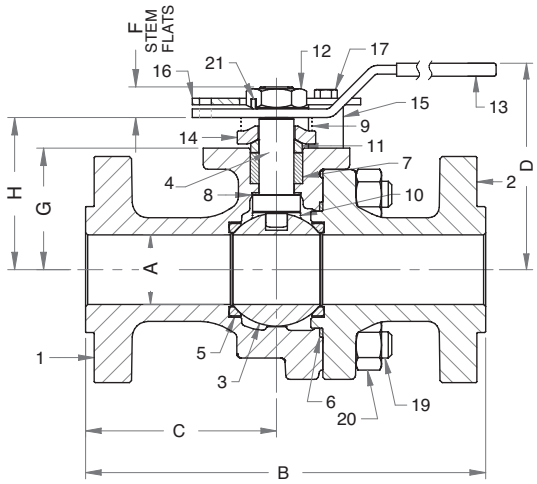

ACTUATOR MOUNTING

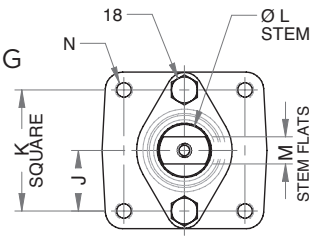

OPTIONS AVAILABLE

(MORE INFORMATION IN SECTION J)

- Complete the product number by adding a suffix (or multiple suffixes) to the base product number. A suffix for seat & seal materials must be selected.
- To specify multiple options, add the desired suffixes in the numerical order shown below. NOTE: Not all suffixes can be combined together.
- Minimum quantities may apply.

(SUFFIX)	OPTION
-04-	2-1/4" Stem Extension (Carbon Steel, Zinc Plated) (1" - 2")
-14-	Side Vented Ball (Uni-Directional)
-21-	UHMWPE Seats, Graphite Packing, Spiral Wound Graphite Body Seal, PEEK Bearing
-24-	Graphite Packing, Spiral Wound Graphite Body Seal, RPTFE Bearing (API 607, 6th Edition, ISO 10497:2010)
-38-	PEEK Seats, Graphite Packing, Spiral Wound Graphite Body Seal, PEEK Bearing
-45-	Less Lever and Nut (Bare Stem)
-49-	No Lubrication. Assembled Dry
-57-	Oxygen Cleaned
-69-	Drilled & Tapped Purge Port with Plugs
-70-	4" Extended Bonnet
-76-	Live Loaded (Lever)
-77-	Live Loaded (Gear, Actuator)
-80-	TFM 1600 Seats, PTFE Chevron Packing, Spiral Wound PTFE Body Seal, PEEK Bearing
-82-	Flat Face Flanges
-90-	Double Packed 4" Extended Bonnet
-95-	Devlon® Seats, Graphite Packing, Spiral Wound Graphite Body Seal, PEEK Bearing
-9P-	Double Packed 4" Extended Bonnet with Monitoring Port
-CE-	CE Marking. See Page D-3 "Product Approvals" for Availability
-EF-	Graphite Packing (API 641 Compliant)
-EP-	Garlock EVSP Stem Packing with Spiral Wound Graphite Gasket (Fire Safe by Design)
-KB-	Kolsterised Ball
-MG-	Gear Operator with Standard Handwheel
-MH-	Gear Operator with Standard Handwheel & Locking Device
-MJ-	Gear Operator with Oversize Handwheel
-MK-	Gear Operator with Oversize Handwheel & Locking Device
-MP-	Positive Material Indentification
-PH-	17-4 PH Stem
-TC-	Hydrostatic Test with Certified Report
-TD-	API 6D Test (Hydrostatic Testing)
-TR-	Hydrostatic Test with Certified Report & MTR
-TW-	Hydrostatic Test with Certified Report & Witnessed
-ZP1-	Fugitive Emissions Packing (Viton)
-ZP2-	Fugitive Emissions Packing (Buna-N)
-ZP3-	Fugitive Emissions Packing (Kalrez)

Pressure/Temperature Ratings - Page M-25, Graph Nos. 34 & 35

DIMENSIONS

PART NO.	SIZE	A	B	C	D	E	F	G	H	J	K	L	M	N	WT.
87A-F07-XX	1-1/2"	1.50	9.50	3.62	5.03	8.40	0.74	2.730	3.500	0.98	1.95	0.750	0.477	5/16-18	31.5
87A-F08-XX	2"	2.00	11.50	5.49	6.06	12.06	0.84	3.490	4.370	1.42	2.84	1.000	0.620	3/8-16	53.0
87A-F09-XX	2-1/2"	2.50	13.00	6.02	6.63	12.06	0.84	4.190	5.070	1.42	2.84	1.000	0.620	3/8-16	65.0

REV. 08JUL19

aalberts integrated piping systems

87A-F00 SERIES

STAINLESS STEEL ASME CLASS 600 FLANGED FULL PORT BALL VALVE
3" THRU 4"

5 YEAR WARRANTY MADE IN USA

FOR STANDARDS COMPLIANCE AND STANDARD FEATURES REFER TO PAGE D-3.

STANDARD MATERIAL LIST

	PART	MATERIAL
1	Body	ASTM A351-CF8M
2	Retainer	ASTM A351-CF8M
3	Ball	ASTM A351-CF8M or ASTM A276 Type 316
4	Stem	ASTM A276 Type 316
5	Seats	Defined by Seat Suffix Selected See "95" or "80" also "38" & "21"
6	Body Seal	Defined by Seat Suffix Selected
7	Stem Seals	Defined by Seat Suffix Selected
8	Stem Bearing	Defined by Seat Suffix Selected
9	Grounding Spring	316 Stainless Steel
10	Grounding Spring	316 Stainless Steel
11	Packing Gland	ASTM A276 Type 316
12	Stem Screw	304 Stainless Steel
13	Handle Adapter	316 Stainless Steel
14	Pipe Handle	Galvanized Steel
15	Gland Plate	ASTM A351-CF8M
16	Stops	ASTM A276 Type 316
17	Lock Plate	302 or 304 Stainless Steel
18	Stop Screws	18-8 Stainless Steel
19	Gland Plate Screws	ASTM A193-B8
20	Body Joint Stud	ASTM A193-B8M
21	Body Joint Nut	ASTM A194 Grade 8
22	Adapter Screw	18-8 Stainless Steel

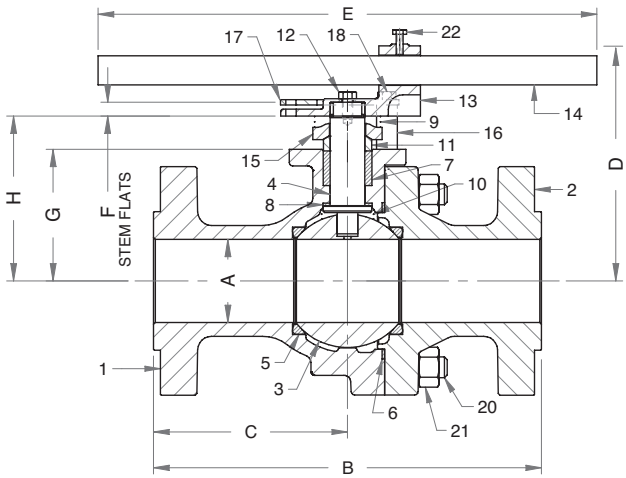

ACTUATOR MOUNTING

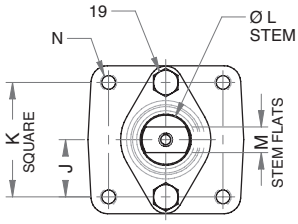

OPTIONS AVAILABLE

(MORE INFORMATION IN SECTION J)

- Complete the product number by adding a suffix (or multiple suffixes) to the base product number. A suffix for seat & seal materials must be selected.
- To specify multiple options, add the desired suffixes in the numerical order shown below. NOTE: Not all suffixes can be combined together.
- Minimum quantities may apply.

(SUFFIX)	OPTION
-14-	Side Vented Ball (Uni-Directional)
-21-	UHMWPE Seats, Graphite Packing, Spiral Wound Graphite Body Seal, PEEK Bearing
-24-	Graphite Packing, Spiral Wound Graphite Body Seal, RPTFE Bearing (API 607, 6th Edition, ISO 10497:2010)
-38-	PEEK Seats, Graphite Packing, Spiral Wound Graphite Body Seal, PEEK Bearing
-45-	Less Lever and Nut (Bare Stem)
-49-	No Lubrication. Assembled Dry
-57-	Oxygen Cleaned
-69-	Drilled & Tapped Purge Port with Plugs
-70-	4" Extended Bonnet
-76-	Live Loaded (Lever)
-77-	Live Loaded (Gear, Actuator)
-80-	TFM 1600 Seats, PTFE Chevron Packing, Spiral Wound PTFE Body Seal, PEEK Bearing
-82-	Flat Face Flanges
-90-	Double Packed 4" Extended Bonnet
-95-	Devlon® Seats, Graphite Packing, Spiral Wound Graphite Body Seal, PEEK Bearing
-9P-	Double Packed 4" Extended Bonnet with Monitoring Port
-CE-	CE Marking. See Page D-3 "Product Approvals" for Availability
-EF-	Graphite Packing (API 641 Compliant)
-EP-	Garlock EVSP Stem Packing with Spiral Wound Graphite Gasket (Fire Safe by Design)
-KB-	Kolsterised Ball
-MG-	Gear Operator with Standard Handwheel
-MH-	Gear Operator with Standard Handwheel & Locking Device
-MJ-	Gear Operator with Oversize Handwheel
-MK-	Gear Operator with Oversize Handwheel & Locking Device
-MP-	Positive Material Indentification
-PH-	17-4 PH Stem
-TC-	Hydrostatic Test with Certified Report
-TD-	API 6D Test (Hydrostatic Testing)
-TR-	Hydrostatic Test with Certified Report & MTR
-TW-	Hydrostatic Test with Certified Report & Witnessed
-ZP1-	Fugitive Emissions Packing (Viton)
-ZP2-	Fugitive Emissions Packing (Buna-N)
-ZP3-	Fugitive Emissions Packing (Kalrez)

Pressure/Temperature Ratings - Page M-25, Graph No. 35

DIMENSIONS

PART NO.	SIZE	A	B	C	D	E	F	G	H	J	K	L	M	N	WT.
87A-F00-XX	3"	3.00	14.00	7.00	8.55	18.00	0.50	4.750	5.946	1.42	2.84	1.250	0.725	3/8-16	101.0
87A-F0A-XX	4"	4.00	17.00	7.19	11.20	34.00	0.75	6.630	8.081	1.74	3.48	1.500	0.780	1/2-13	194.0

REV. 08JUL19

87A-F00 SERIES

STAINLESS STEEL ASME CLASS 600 FLANGED FULL PORT BALL VALVE
6”

5 YEAR WARRANTY MADE IN USA

FOR STANDARDS COMPLIANCE AND STANDARD FEATURES REFER TO PAGE D-3.

STANDARD MATERIAL LIST

	PART	MATERIAL
1	Body	ASTM A351-CF8M
2	Retainer	ASTM A351-CF8M
3	Ball	ASTM A351-CF8M or ASTM A276 Type 316
4	Stem	ASTM A276 Type 316
5	Seats	Defined by Seat Suffix Selected See “95” or “80” also “38” & “21”
6	Body Seal	Defined by Seat Suffix Selected
7	Stem Seals	Defined by Seat Suffix Selected
8	Stem Bearing	Defined by Seat Suffix Selected
9	Grounding Spring	316 Stainless Steel
10	Grounding Spring	316 Stainless Steel
11	Packing Gland	ASTM A276 Type 316
12	Stem Screw	304 Stainless Steel
13	Handle Adapter	316 Stainless Steel
14	Pipe Handle	Galvanized Steel
15	Gland Plate	316 Stainless Steel
16	Stops	ASTM A276 Type 316
17	Lock Plate	302 or 304 Stainless Steel
18	Stop Screws	316 Stainless Steel
19	Gland Plate Screws	ASTM A193-B8
20	Body Joint Stud	ASTM A193-B8M
21	Body Joint Nut	ASTM A194 Grade 8
22	Adapter Screw	18-8 Stainless Steel

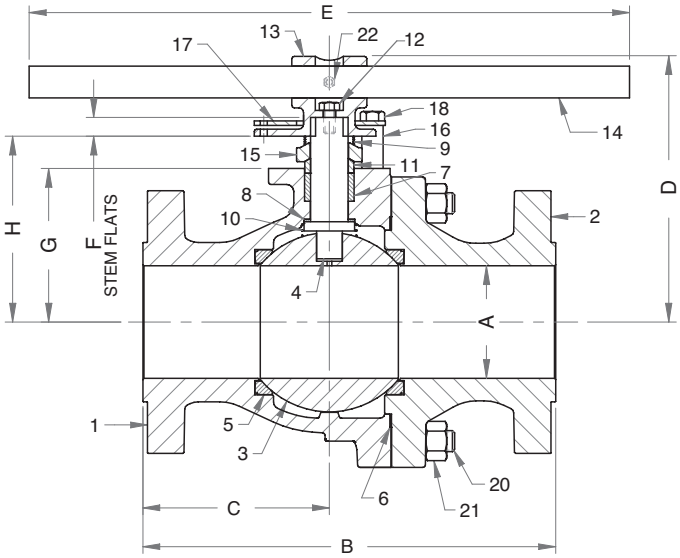

ACTUATOR MOUNTING

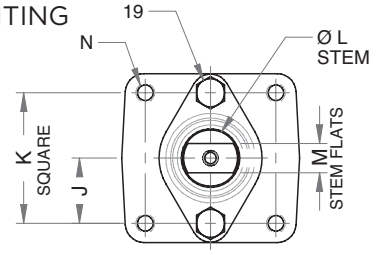

OPTIONS AVAILABLE

(MORE INFORMATION IN SECTION J)

- Complete the product number by adding a suffix (or multiple suffixes) to the base product number. A suffix for seat & seal materials must be selected.
- To specify multiple options, add the desired suffixes in the numerical order shown below. NOTE: Not all suffixes can be combined together.
- Minimum quantities may apply.

(SUFFIX)	OPTION
-14-	Side Vented Ball (Uni-Directional)
-21-	UHMWPE Seats, Graphite Packing, Spiral Wound Graphite Body Seal, PEEK Bearing
-24-	Graphite Packing, Spiral Wound Graphite Body Seal, RPTFE Bearing (API 607, 6th Edition, ISO 10497:2010)
-38-	PEEK Seats, Graphite Packing, Spiral Wound Graphite Body Seal, PEEK Bearing
-45-	Less Lever and Nut (Bare Stem)
-49-	No Lubrication. Assembled Dry
-57-	Oxygen Cleaned
-69-	Drilled & Tapped Purge Port with Plugs
-70-	4” Extended Bonnet
-76-	Live Loaded (Lever)
-77-	Live Loaded (Gear, Actuator)
-80-	TFM 1600 Seats, PTFE Chevron Packing, Spiral Wound PTFE Body Seal, PEEK Bearing
-82-	Flat Face Flanges
-90-	Double Packed 4” Extended Bonnet
-95-	Devlon® Seats, Graphite Packing, Spiral Wound Graphite Body Seal, PEEK Bearing
-9P-	Double Packed 4” Extended Bonnet with Monitoring Port
-CE-	CE Marking. See Page D-3 “Product Approvals” for Availability
-EF-	Graphite Packing (API 641 Compliant)
-EP-	Garlock EVSP Stem Packing with Spiral Wound Graphite Gasket (Fire Safe by Design)
-KB-	Kolsterised Ball
-MG-	Gear Operator with Standard Handwheel
-MH-	Gear Operator with Standard Handwheel & Locking Device
-MJ-	Gear Operator with Oversize Handwheel
-MK-	Gear Operator with Oversize Handwheel & Locking Device
-MP-	Positive Material Indentification
-PH-	17-4 PH Stem
-TC-	Hydrostatic Test with Certified Report
-TD-	API 6D Test (Hydrostatic Testing)
-TR-	Hydrostatic Test with Certified Report & MTR
-TW-	Hydrostatic Test with Certified Report & Witnessed
-ZP1-	Fugitive Emissions Packing (Viton)
-ZP2-	Fugitive Emissions Packing (Buna-N)
-ZP3-	Fugitive Emissions Packing (Kalrez)

Pressure/Temperature Ratings - Page M-26, Graph No. 36

DIMENSIONS

PART NO.	SIZE	A	B	C	D	E	F	G	H	J	K	L	M	N	WT.
87A-F0C-XX	6”	6.00	22.00	9.94	14.17	45.00	1.00	8.190	9.915	2.298	4.59	2.00	1.375	3/4-10	500.0

REV. 08JUL19

aalberts integrated piping systems

87A-F00 SERIES

STAINLESS STEEL ASME CLASS 600 FLANGED FULL PORT BALL VALVE
8”

5 YEAR WARRANTY MADE IN USA

FOR STANDARDS COMPLIANCE AND STANDARD FEATURES REFER TO PAGE D-3.

STANDARD MATERIAL LIST

	PART	MATERIAL
1	Body	ASTM A351-CF8M
2	Retainer	ASTM A351-CF8M
3	Ball	ASTM A351-CF8M or ASTM A276 Type 316
4	Stem	ASTM A276 Type 316
5	Seats	Defined by Seat Suffix Selected See “95” or “80” also “38” & “21”
6	Body Seal	Defined by Seat Suffix Selected
7	Stem Seals	Defined by Seat Suffix Selected
8	Stem Bearing	Defined by Seat Suffix Selected
9	Grounding Spring	316 Stainless Steel
10	Grounding Spring	316 Stainless Steel
11	Packing Gland	ASTM A276 Type 316
12	Gland Plate	316 Stainless Steel
13	Gland Plate Screws	ASTM A193-B8
14	Body Joint Stud	ASTM A193 Grade B8M
15	Body Joint Nut	ASTM A194 Grade 8

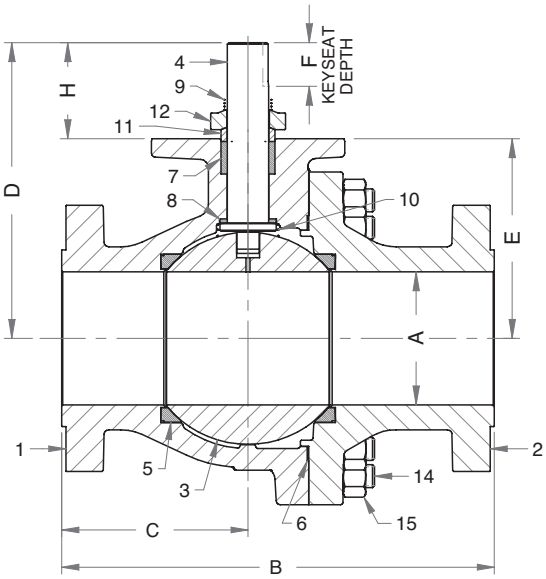

ACTUATOR MOUNTING

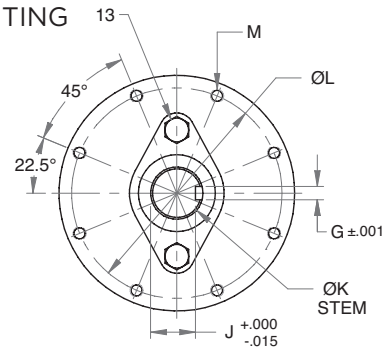

OPTIONS AVAILABLE

(MORE INFORMATION IN SECTION J)

- Complete the product number by adding a suffix (or multiple suffixes) to the base product number. A suffix for seat & seal materials must be selected.
- To specify multiple options, add the desired suffixes in the numerical order shown below. NOTE: Not all suffixes can be combined together.
- Minimum quantities may apply.

(SUFFIX)	OPTION
-14-	Side Vented Ball (Uni-Directional)
-21-	UHMWPE Seats, Graphite Packing, Spiral Wound Graphite Body Seal, PEEK Bearing
-24-	Graphite Packing, Spiral Wound Graphite Body Seal, RPTFE Bearing (API 607, 6th Edition, ISO 10497:2010)
-38-	PEEK Seats, Graphite Packing, Spiral Wound Graphite Body Seal, PEEK Bearing
-45-	Less Lever and Nut (Bare Stem)
-49-	No Lubrication. Assembled Dry
-57-	Oxygen Cleaned
-69-	Drilled & Tapped Purge Port with Plugs
-70-	4” Extended Bonnet
-76-	Live Loaded (Lever)
-77-	Live Loaded (Gear, Actuator)
-80-	TFM 1600 Seats, PTFE Chevron Packing, Spiral Wound PTFE Body Seal, PEEK Bearing
-82-	Flat Face Flanges
-90-	Double Packed 4” Extended Bonnet
-95-	Devlon® Seats, Graphite Packing, Spiral Wound Graphite Body Seal, PEEK Bearing
-9P-	Double Packed 4” Extended Bonnet with Monitoring Port
-CE-	CE Marking. See Page D-3 “Product Approvals” for Availability
-EF-	Graphite Packing (API 641 Compliant)
-EP-	Garlock EVSP Stem Packing with Spiral Wound Graphite Gasket (Fire Safe by Design)
-KB-	Kolsterised Ball
-MG-	Gear Operator with Standard Handwheel
-MH-	Gear Operator with Standard Handwheel & Locking Device
-MJ-	Gear Operator with Oversize Handwheel
-MK-	Gear Operator with Oversize Handwheel & Locking Device
-MP-	Positive Material Indentification
-PH-	17-4 PH Stem
-TC-	Hydrostatic Test with Certified Report
-TD-	API 6D Test (Hydrostatic Testing)
-TR-	Hydrostatic Test with Certified Report & MTR
-TW-	Hydrostatic Test with Certified Report & Witnessed
-ZP1-	Fugitive Emissions Packing (Viton)
-ZP2-	Fugitive Emissions Packing (Buna-N)
-ZP3-	Fugitive Emissions Packing (Kalrez)

Pressure/Temperature Ratings - Page M-26, Graph No. 36

DIMENSIONS

PART NO.	SIZE	A	B	C	D	E	F	G	H	J	K	L	M	WT.
87A-F0E-XX	8”	8.00	26.00	11.20	17.77	12.00	2.25*	0.627	5.77	2.133	2.49	10.00	5/8-11	920.0

** Keyway Length*

REV. 08JUL19

88A-F00 SERIES

CARBON STEEL ASME CLASS 600 FLANGED FULL PORT BALL VALVE
1"

5 YEAR WARRANTY MADE IN USA

FOR STANDARDS COMPLIANCE AND STANDARD FEATURES REFER TO PAGE D-3.

STANDARD MATERIAL LIST

	PART	MATERIAL
1	Body	ASTM A216-WCB
2	Retainer	ASTM A108 Type 1018
3	Ball	ASTM A108 Type 1215 Chrome Plated
4	Stem	ASTM A108 Type 1215
5	Seats	Defined by Seat Suffix Selected See "95" or "80" also "38" & "21"
6	Body Seal	Defined by Seat Suffix Selected
7	Stem Seals	Defined by Seat Suffix Selected
8	Stem Bearing	Defined by Seat Suffix Selected
9	Grounding Spring	316 Stainless Steel
10	Grounding Spring	316 Stainless Steel
11	Packing Gland	ASTM A108 Type 1215
12	Stem Screw	Steel Zinc Plated
13	Lever & Grip	ASTM A366 Steel with Vinyl Grip
14	Gland Plate	302 or 304 Stainless Steel
15	Stops	ASTM A108 Type 1215
16	Lock Plate	ASTM A366 Steel
17	Spacer	ASTM A276 Type 316
18	Stop Screws	SAE J429 Grade 2 Steel Zinc Plated
19	Gland Plate Screws	ASTM A193-B7

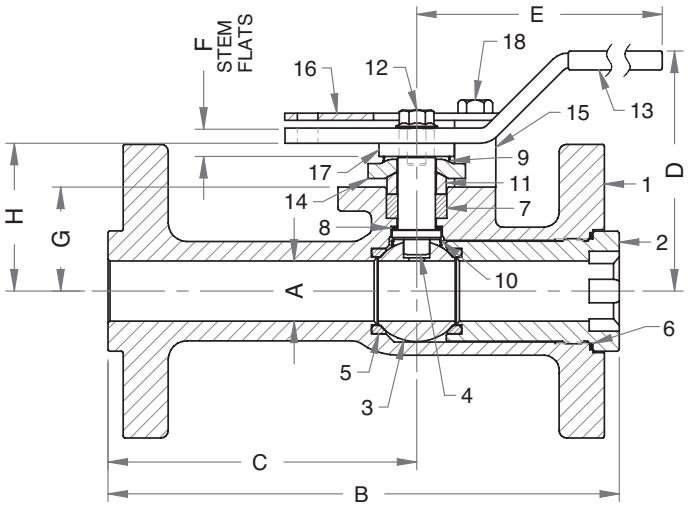

ACTUATOR MOUNTING 19

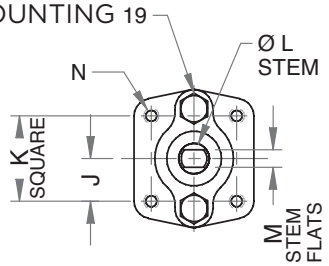

VARIATIONS AVAILABLE

- 88A-F40 Series (316 Stainless Steel Ball & Stem)

OPTIONS AVAILABLE

(MORE INFORMATION IN SECTION J)

- Complete the product number by adding a suffix (or multiple suffixes) to the base product number. A suffix for seat & seal materials must be selected.
- To specify multiple options, add the desired suffixes in the numerical order shown below. NOTE: Not all suffixes can be combined together.
- Minimum quantities may apply.

(SUFFIX)	OPTION
-04-	2-1/4" Stem Extension (Carbon Steel, Zinc Plated) (1" - 2")
-14-	Side Vented Ball (Uni-Directional). Not Available with Plated CS Ball
-21-	UHMWPE Seats, Graphite Packing, Spiral Wound Graphite Body Seal, PEEK Bearing
-24-	Graphite Packing, Spiral Wound Graphite Body Seal, RPTFE Bearing (API 607, 6th Edition, ISO 10497:2010)
-26-	Chlorine Service. Vented. Special Cleaning. Assembled Dry. (for CS, Hastelloy and Ni-Cu Valves. Ball Must be Hastelloy or Ni-CU)
-38-	PEEK Seats, Graphite Packing, Spiral Wound Graphite Body Seal, PEEK Bearing
-45-	Less Lever and Nut (Bare Stem)
-49-	No Lubrication. Assembled Dry
-67-	Cleaned for Industrial Gas (CS Only)
-69-	Drilled & Tapped Purge Port with Plugs
-70-	4" Extended Bonnet
-76-	Live Loaded (Lever)
-77-	Live Loaded (Gear, Actuator)
-80-	TFM 1600 Seats, PTFE Chevron Packing, Spiral Wound PTFE Body Seal, PEEK Bearing
-82-	Flat Face Flanges
-90-	Double Packed 4" Extended Bonnet
-95-	Devlon® Seats, Graphite Packing, Spiral Wound Graphite Body Seal, PEEK Bearing
-9P-	Double Packed 4" Extended Bonnet with Monitoring Port
-CE-	CE Marking. See Page D-3 "Product Approvals" for Availability
-EF-	Graphite Packing (API 641 Compliant)
-EP-	Garlock EVSP Stem Packing with Spiral Wound Graphite Gasket (Fire Safe by Design)
-KB-	Kolsterised Ball
-MG-	Gear Operator with Standard Handwheel
-MH-	Gear Operator with Standard Handwheel & Locking Device
-MJ-	Gear Operator with Oversize Handwheel
-MK-	Gear Operator with Oversize Handwheel & Locking Device
-PH-	17-4 PH Stem
-TC-	Hydrostatic Test with Certified Report
-TD-	API 6D Test (Hydrostatic Testing)
-TR-	Hydrostatic Test with Certified Report & MTR
-TW-	Hydrostatic Test with Certified Report & Witnessed
-ZP1-	Fugitive Emissions Packing (Viton)
-ZP2-	Fugitive Emissions Packing (Buna-N)
-ZP3-	Fugitive Emissions Packing (Kalrez)

Pressure/Temperature Ratings - Page M-25, Graph No. 34

DIMENSIONS

PART NO.	SIZE	A	B	C	D	E	F	G	H	J	K	L	M	N	WT.
88A-F05-XX	1"	1.00	8.50	5.13	3.99	6.65	0.45	1.730	2.460	0.98	1.95	0.625	0.412	5/16-18	13.0

REV. 08JUL19

aalberts integrated piping systems

88A-F00 SERIES

CARBON STEEL ASME CLASS 600 FLANGED FULL PORT BALL VALVE
1-1/2" THRU 2-1/2"

5 YEAR WARRANTY MADE IN USA

FOR STANDARDS COMPLIANCE AND STANDARD FEATURES REFER TO PAGE D-3.

STANDARD MATERIAL LIST

	PART	MATERIAL
1	Body	ASTM A216-WCB
2	Retainer	ASTM A216-WCB
3	Ball	ASTM A108 Type 1215 or A216-WCB Chrome Plated
4	Stem	ASTM A108 Type 1215
5	Seats	Defined by Seat Suffix Selected See "95" or "80" also "38" & "21"
6	Body Seal	Defined by Seat Suffix Selected
7	Stem Seals	Defined by Seat Suffix Selected
8	Stem Bearing	Defined by Seat Suffix Selected
9	Grounding Spring	316 Stainless Steel
10	Grounding Spring	316 Stainless Steel
11	Packing Gland	ASTM A108 Type 1215
12	Stem Nut	ASTM A194 Grade 8
13	Lever & Grip	ASTM A366 Steel with Vinyl Grip
14	Gland Plate	302 & 304 Stainless Steel
15	Stops	ASTM A108 Type 1215
16	Lock Plate	ASTM A366 Steel
17	Stop Screws	SAE J429 Grade 2
18	Gland Plate Screws	ASTM A193-B7
19	Body Joint Stud	ASTM A193-Grade B7
20	Body Joint Nut	ASTM A194-Grade 2H
21	Lock Washer	302 or 304 Stainless Steel

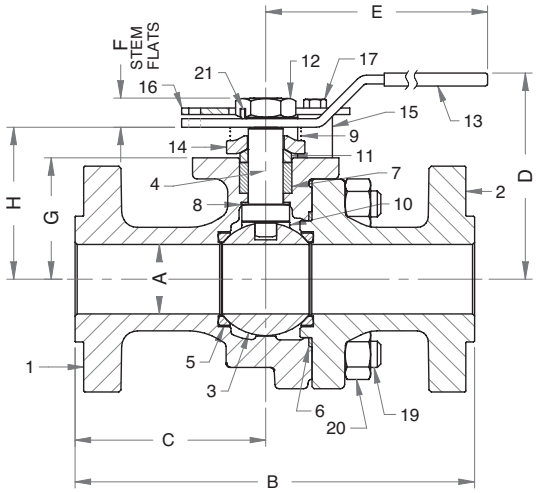

ACTUATOR MOUNTING

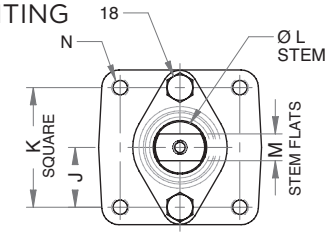

VARIATIONS AVAILABLE

- 88A-F40 Series (316 Stainless Steel Ball & Stem)

OPTIONS AVAILABLE

(MORE INFORMATION IN SECTION J)

- Complete the product number by adding a suffix (or multiple suffixes) to the base product number. A suffix for seat & seal materials must be selected.
- To specify multiple options, add the desired suffixes in the numerical order shown below. NOTE: Not all suffixes can be combined together.
- Minimum quantities may apply.

(SUFFIX)	OPTION
-04-	2-1/4" Stem Extension (Carbon Steel, Zinc Plated) (1" - 2")
-14-	Side Vented Ball (Uni-Directional). Not Available with Plated CS Ball
-21-	UHMWPE Seats, Graphite Packing, Spiral Wound Graphite Body Seal, PEEK Bearing
-24-	Graphite Packing, Spiral Wound Graphite Body Seal, RPTFE Bearing (API 607, 6th Edition, ISO 10497:2010)
-26-	Chlorine Service. Vented. Special Cleaning. Assembled Dry. (for CS, Hastelloy and Ni-Cu Valves. Ball Must be Hastelloy or Ni-CU)
-38-	PEEK Seats, Graphite Packing, Spiral Wound Graphite Body Seal, PEEK Bearing
-45-	Less Lever and Nut (Bare Stem)
-49-	No Lubrication. Assembled Dry
-67-	Cleaned for Industrial Gas (CS Only)
-69-	Drilled & Tapped Purge Port with Plugs
-70-	4" Extended Bonnet
-76-	Live Loaded (Lever)
-77-	Live Loaded (Gear, Actuator)
-80-	TFM 1600 Seats, PTFE Chevron Packing, Spiral Wound PTFE Body Seal, PEEK Bearing
-82-	Flat Face Flanges
-90-	Double Packed 4" Extended Bonnet
-95-	Devlon® Seats, Graphite Packing, Spiral Wound Graphite Body Seal, PEEK Bearing
-9P-	Double Packed 4" Extended Bonnet with Monitoring Port
-CE-	CE Marking. See Page D-3 "Product Approvals" for Availability
-EF-	Graphite Packing (API 641 Compliant)
-EP-	Garlock EVSP Stem Packing with Spiral Wound Graphite Gasket (Fire Safe by Design)
-KB-	Kolsterised Ball
-MG-	Gear Operator with Standard Handwheel
-MH-	Gear Operator with Standard Handwheel & Locking Device
-MJ-	Gear Operator with Oversize Handwheel
-MK-	Gear Operator with Oversize Handwheel & Locking Device
-PH-	17-4 PH Stem
-TC-	Hydrostatic Test with Certified Report
-TD-	API 6D Test (Hydrostatic Testing)
-TR-	Hydrostatic Test with Certified Report & MTR
-TW-	Hydrostatic Test with Certified Report & Witnessed
-ZP1-	Fugitive Emissions Packing (Viton)
-ZP2-	Fugitive Emissions Packing (Buna-N)
-ZP3-	Fugitive Emissions Packing (Kalrez)

Pressure/Temperature Ratings - Page M-25, Graph Nos. 34 & 35

DIMENSIONS

PART NO.	SIZE	A	B	C	D	E	F	G	H	J	K	L	M	N	WT.
88A-F07-XX	1-1/2"	1.50	9.50	3.62	5.03	8.40	0.74	2.730	3.500	0.98	1.95	0.750	0.477	5/16-18	31.5
88A-F08-XX	2"	2.00	11.50	5.49	6.06	12.06	0.84	3.490	4.370	1.42	2.84	1.000	0.620	3/8-16	53.0
88A-F09-XX	2-1/2"	2.50	13.00	6.02	6.63	12.06	0.84	4.190	5.070	1.42	2.84	1.000	0.620	3/8-16	65.0

REV. 08JUL19

88A-F00 SERIES

CARBON STEEL ASME CLASS 600 FLANGED FULL PORT BALL VALVE
3" THRU 4"

5 YEAR WARRANTY MADE IN USA

FOR STANDARDS COMPLIANCE AND STANDARD FEATURES REFER TO PAGE D-3.

STANDARD MATERIAL LIST

	PART	MATERIAL
1	Body	ASTM A216-WCB
2	Retainer	ASTM A216-WCB
3	Ball	ASTM A108 Type 1215 or A216-WCB Chrome Plated
4	Stem	ASTM A108 Type 1215
5	Seats	Defined by Seat Suffix Selected See "95" or "80" also "38" & "21"
6	Body Seal	Defined by Seat Suffix Selected
7	Stem Seals	Defined by Seat Suffix Selected
8	Stem Bearing	Defined by Seat Suffix Selected
9	Grounding Spring	316 Stainless Steel
10	Grounding Spring	316 Stainless Steel
11	Packing Gland	ASTM A108 Type 1215
12	Stem Screw	304 Stainless Steel
13	Handle Adapter	ASTM A366 Steel with Vinyl Grip
14	Pipe Handle	Galvanized Steel (not shown)
15	Gland Plate	316 Stainless Steel
16	Stops	ASTM A108 Type 1215
17	Lock Plate	ASTM A366 Steel
18	Stop Screws	SAE J429 Grade 2
19	Gland Plate Screws	ASTM A193-B7
20	Body Joint Stud	ASTM A193- Grade B7
21	Body Joint Nut	ASTM A194- Grade 2H
22	Adapter Screw	18-8 Stainless Steel

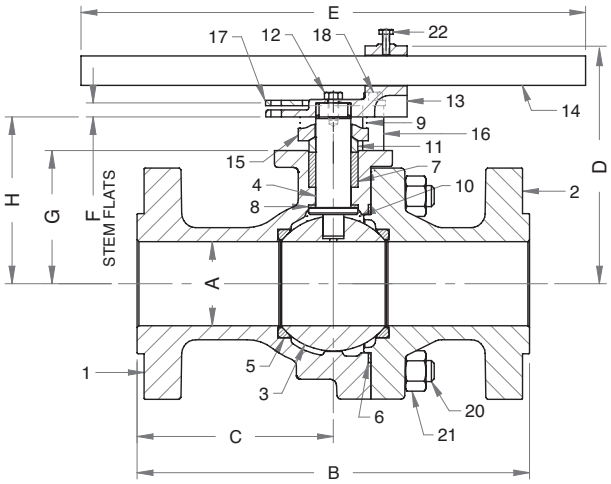

ACTUATOR MOUNTING

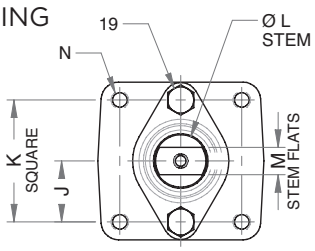

VARIATIONS AVAILABLE

- 88A-F40 Series (316 Stainless Steel Ball & Stem)

OPTIONS AVAILABLE

(MORE INFORMATION IN SECTION J)

- Complete the product number by adding a suffix (or multiple suffixes) to the base product number. A suffix for seat & seal materials must be selected.
- To specify multiple options, add the desired suffixes in the numerical order shown below. NOTE: Not all suffixes can be combined together.
- Minimum quantities may apply.

(SUFFIX)	OPTION
-14-	Side Vented Ball (Uni-Directional). Not Available with Plated CS Ball
-21-	UHMWPE Seats, Graphite Packing, Spiral Wound Graphite Body Seal, PEEK Bearing
-24-	Graphite Packing, Spiral Wound Graphite Body Seal, RPTFE Bearing (API 607, 6th Edition, ISO 10497:2010)
-26-	Chlorine Service. Vented. Special Cleaning. Assembled Dry. (for CS, Hastelloy and Ni-Cu Valves. Ball Must be Hastelloy or Ni-CU)
-38-	PEEK Seats, Graphite Packing, Spiral Wound Graphite Body Seal, PEEK Bearing
-45-	Less Lever and Nut (Bare Stem)
-49-	No Lubrication. Assembled Dry
-67-	Cleaned for Industrial Gas (CS Only)
-69-	Drilled & Tapped Purge Port with Plugs
-70-	4" Extended Bonnet
-76-	Live Loaded (Lever)
-77-	Live Loaded (Gear, Actuator)
-80-	TFM 1600 Seats, PTFE Chevron Packing, Spiral Wound PTFE Body Seal, PEEK Bearing
-82-	Flat Face Flanges
-90-	Double Packed 4" Extended Bonnet
-95-	Devlon® Seats, Graphite Packing, Spiral Wound Graphite Body Seal, PEEK Bearing
-9P-	Double Packed 4" Extended Bonnet with Monitoring Port
-CE-	CE Marking. See Page D-3 "Product Approvals" for Availability
-EF-	Graphite Packing (API 641 Compliant)
-EP-	Garlock EVSP Stem Packing with Spiral Wound Graphite Gasket (Fire Safe by Design)
-KB-	Kolsterised Ball
-MG-	Gear Operator with Standard Handwheel
-MH-	Gear Operator with Standard Handwheel & Locking Device
-MJ-	Gear Operator with Oversize Handwheel
-MK-	Gear Operator with Oversize Handwheel & Locking Device
-PH-	17-4 PH Stem
-TC-	Hydrostatic Test with Certified Report
-TD-	API 6D Test (Hydrostatic Testing)
-TR-	Hydrostatic Test with Certified Report & MTR
-TW-	Hydrostatic Test with Certified Report & Witnessed
-ZP1-	Fugitive Emissions Packing (Viton)
-ZP2-	Fugitive Emissions Packing (Buna-N)
-ZP3-	Fugitive Emissions Packing (Kalrez)

Pressure/Temperature Ratings - Page M-25, Graph No. 35

DIMENSIONS

PART NO.	SIZE	A	B	C	D	E	F	G	H	J	K	L	M	N	WT.
88A-F00-XX	3"	3.00	14.00	7.00	8.55	18.00	0.50	4.750	5.946	1.42	2.84	1.250	0.725	3/8-16	101.0
88A-F0A-XX	4"	4.00	17.00	7.19	11.20	34.00	0.75	6.630	8.081	1.74	3.48	1.500	0.780	1/2-13	194.0

REV. 08JUL19

aalberts integrated piping systems

88A-F00 SERIES

CARBON STEEL ASME CLASS 600 FLANGED FULL PORT BALL VALVE
6”

5 YEAR WARRANTY MADE IN USA

FOR STANDARDS COMPLIANCE AND STANDARD FEATURES REFER TO PAGE D-3.

STANDARD MATERIAL LIST

	PART	MATERIAL
1	Body	ASTM A216-WCB
2	Retainer	ASTM A216-WCB
3	Ball	ASTM A108 Type 1215 or A216-WCB Chrome Plated
4	Stem	ASTM A108 Type 1215
5	Seats	Defined by Seat Suffix Selected See “95” or “80” also “38” & “21”
6	Body Seal	Defined by Seat Suffix Selected
7	Stem Seals	Defined by Seat Suffix Selected
8	Stem Bearing	Defined by Seat Suffix Selected
9	Grounding Spring	316 Stainless Steel
10	Grounding Spring	316 Stainless Steel
11	Packing Gland	ASTM A108 Type 1215
12	Stem Screw	304 Stainless Steel
13	Handle Adapter	316 Stainless Steel
14	Pipe Handle	Galvanized Steel (not shown)
15	Gland Plate	316 Stainless Steel
16	Stops	ASTM A108 Type 1215
17	Lock Plate	ASTM A366 Steel
18	Stop Screws	SAE J429 Grade 2
19	Gland Plate Screws	ASTM A193-B7
20	Body Joint Stud	ASTM A193-Grade B7
21	Body Joint Nut	ASTM A194-Grade 2H
22	Adapter Screw	18-8 Stainless Steel

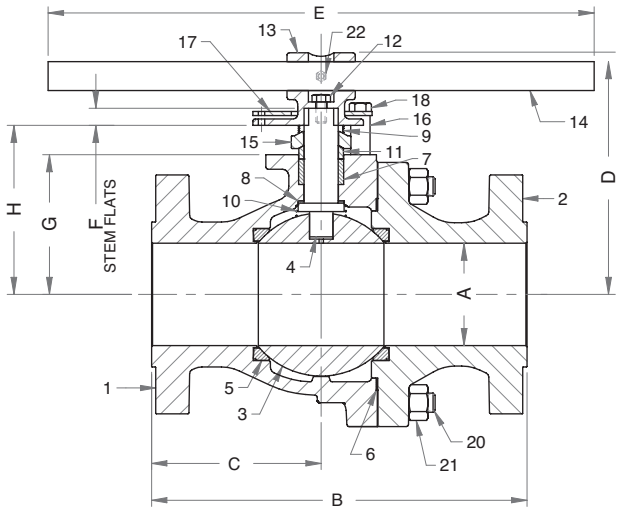

ACTUATOR MOUNTING

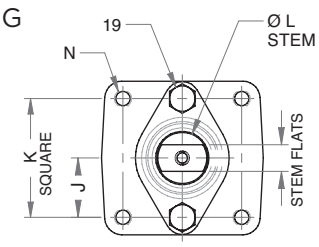

VARIATIONS AVAILABLE

- 88A-F40 Series (316 Stainless Steel Ball & Stem)

OPTIONS AVAILABLE

(MORE INFORMATION IN SECTION J)

- Complete the product number by adding a suffix (or multiple suffixes) to the base product number. A suffix for seat & seal materials must be selected.
- To specify multiple options, add the desired suffixes in the numerical order shown below. NOTE: Not all suffixes can be combined together.
- Minimum quantities may apply.

(SUFFIX)	OPTION
-14-	Side Vented Ball (Uni-Directional). Not Available with Plated CS Ball
-21-	UHMWPE Seats, Graphite Packing, Spiral Wound Graphite Body Seal, PEEK Bearing
-24-	Graphite Packing, Spiral Wound Graphite Body Seal, RPTFE Bearing (API 607, 6th Edition, ISO 10497:2010)
-26-	Chlorine Service. Vented. Special Cleaning. Assembled Dry. (for CS, Hastelloy and Ni-Cu Valves. Ball Must be Hastelloy or Ni-CU)
-38-	PEEK Seats, Graphite Packing, Spiral Wound Graphite Body Seal, PEEK Bearing
-45-	Less Lever and Nut (Bare Stem)
-49-	No Lubrication. Assembled Dry
-67-	Cleaned for Industrial Gas (CS Only)
-69-	Drilled & Tapped Purge Port with Plugs
-70-	4” Extended Bonnet
-76-	Live Loaded (Lever)
-77-	Live Loaded (Gear, Actuator)
-80-	TFM 1600 Seats, PTFE Chevron Packing, Spiral Wound PTFE Body Seal, PEEK Bearing
-82-	Flat Face Flanges
-90-	Double Packed 4” Extended Bonnet
-95-	Devlon® Seats, Graphite Packing, Spiral Wound Graphite Body Seal, PEEK Bearing
-9P-	Double Packed 4” Extended Bonnet with Monitoring Port
-CE-	CE Marking. See Page D-3 “Product Approvals” for Availability
-EF-	Graphite Packing (API 641 Compliant)
-EP-	Garlock EVSP Stem Packing with Spiral Wound Graphite Gasket (Fire Safe by Design)
-KB-	Kolsterised Ball
-MG-	Gear Operator with Standard Handwheel
-MH-	Gear Operator with Standard Handwheel & Locking Device
-MJ-	Gear Operator with Oversize Handwheel
-MK-	Gear Operator with Oversize Handwheel & Locking Device
-PH-	17-4 PH Stem
-TC-	Hydrostatic Test with Certified Report
-TD-	API 6D Test (Hydrostatic Testing)
-TR-	Hydrostatic Test with Certified Report & MTR
-TW-	Hydrostatic Test with Certified Report & Witnessed
-ZP1-	Fugitive Emissions Packing (Viton)
-ZP2-	Fugitive Emissions Packing (Buna-N)
-ZP3-	Fugitive Emissions Packing (Kalrez)

Pressure/Temperature Ratings - Page M-26, Graph No. 36

DIMENSIONS

PART NO.	SIZE	A	B	C	D	E	F	G	H	J	K	L	M	N	WT.
88A-F0C-XX	6”	6.00	22.00	9.94	14.17	45.00	1.00	8.190	9.915	2.298	3.48	2.000	1.375	3/4-10	500.0

REV. 08JUL19

88A-F00 SERIES

CARBON STEEL ASME CLASS 600 FLANGED FULL PORT BALL VALVE
8"

5 YEAR WARRANTY MADE IN USA

FOR STANDARDS COMPLIANCE AND STANDARD FEATURES REFER TO PAGE D-3.

STANDARD MATERIAL LIST

	PART	MATERIAL
1	Body	ASTM A216-WCB
2	Retainer	ASTM A216-WCB
3	Ball	ASTM A108 Type 1215 or ASTM A216-WCB Chrome Plated
4	Stem	ASTM A108 Type 1215
5	Seats	Defined by Seat Suffix Selected See "95" or "80" also "38" & "21"
6	Body Seal	Defined by Seat Suffix Selected
7	Stem Seals	Defined by Seat Suffix Selected
8	Stem Bearing	Defined by Seat Suffix Selected
9	Grounding Spring	316 Stainless Steel
10	Grounding Spring	316 Stainless Steel
11	Packing Gland	ASTM A108 Type 1215
12	Gland Plate	316 Stainless Steel
13	Gland Plate Screws	ASTM A193-B7
14	Body Joint Stud	ASTM A193 Grade B7
15	Body Joint Nut	ASTM A194 Grade 2H

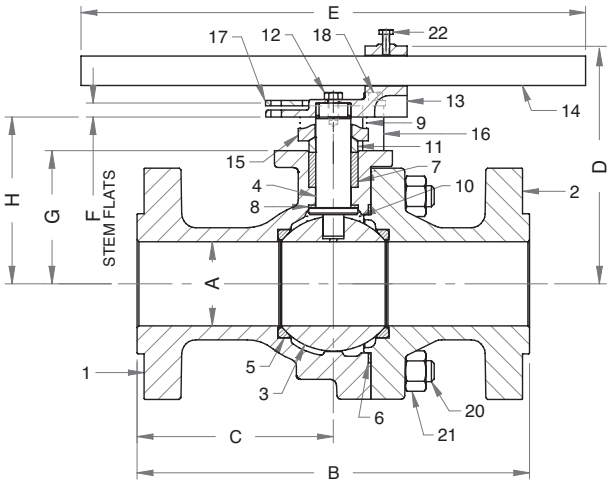

ACTUATOR MOUNTING

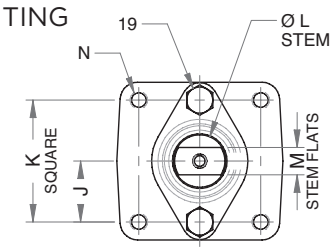

VARIATIONS AVAILABLE

- 88A-F40 Series (316 Stainless Steel Ball & Stem)

OPTIONS AVAILABLE

(MORE INFORMATION IN SECTION J)

- Complete the product number by adding a suffix (or multiple suffixes) to the base product number. A suffix for seat & seal materials must be selected.
- To specify multiple options, add the desired suffixes in the numerical order shown below. NOTE: Not all suffixes can be combined together.
- Minimum quantities may apply.

(SUFFIX)	OPTION
-14-	Side Vented Ball (Uni-Directional). Not Available with Plated CS Ball
-21-	UHMWPE Seats, Graphite Packing, Spiral Wound Graphite Body Seal, PEEK Bearing
-24-	Graphite Packing, Spiral Wound Graphite Body Seal, RPTFE Bearing (API 607, 6th Edition, ISO 10497:2010)
-26-	Chlorine Service. Vented. Special Cleaning. Assembled Dry. (for CS, Hastelloy and Ni-Cu Valves. Ball Must be Hastelloy or Ni-CU)
-38-	PEEK Seats, Graphite Packing, Spiral Wound Graphite Body Seal, PEEK Bearing
-45-	Less Lever and Nut (Bare Stem)
-49-	No Lubrication. Assembled Dry
-67-	Cleaned for Industrial Gas (CS Only)
-69-	Drilled & Tapped Purge Port with Plugs
-70-	4" Extended Bonnet
-76-	Live Loaded (Lever)
-77-	Live Loaded (Gear, Actuator)
-80-	TFM 1600 Seats, PTFE Chevron Packing, Spiral Wound PTFE Body Seal, PEEK Bearing
-82-	Flat Face Flanges
-90-	Double Packed 4" Extended Bonnet
-95-	Devlon® Seats, Graphite Packing, Spiral Wound Graphite Body Seal, PEEK Bearing
-9P-	Double Packed 4" Extended Bonnet with Monitoring Port
-CE-	CE Marking. See Page D-3 "Product Approvals" for Availability
-EF-	Graphite Packing (API 641 Compliant)
-EP-	Garlock EVSP Stem Packing with Spiral Wound Graphite Gasket (Fire Safe by Design)
-KB-	Kolsterised Ball
-MG-	Gear Operator with Standard Handwheel
-MH-	Gear Operator with Standard Handwheel & Locking Device
-MJ-	Gear Operator with Oversize Handwheel
-MK-	Gear Operator with Oversize Handwheel & Locking Device
-PH-	17-4 PH Stem
-TC-	Hydrostatic Test with Certified Report
-TD-	API 6D Test (Hydrostatic Testing)
-TR-	Hydrostatic Test with Certified Report & MTR
-TW-	Hydrostatic Test with Certified Report & Witnessed
-ZP1-	Fugitive Emissions Packing (Viton)
-ZP2-	Fugitive Emissions Packing (Buna-N)
-ZP3-	Fugitive Emissions Packing (Kalrez)

Pressure/Temperature Ratings - Page M-26, Graph No. 36

DIMENSIONS

PART NO.	SIZE	A	B	C	D	E	F	G	H	J	K	L	M	WT.
88A-F0E-XX	8"	8.00	26.00	11.20	17.77	12.00	2.25*	0.627	5.77	2.133	2.49	10.00	5/8-11	920.0

** Keyway Length*

REV. 08JUL19

aalberts integrated piping systems

88L-F40 SERIES

LOW TEMP. CARBON STEEL ASME CLASS 600 FLANGED FULL PORT BALL VALVE
1"

5 YEAR WARRANTY MADE IN USA

FOR STANDARDS COMPLIANCE AND STANDARD FEATURES REFER TO PAGE D-3 AND RATED TO -50°F (-46°C).

STANDARD MATERIAL LIST

	PART	MATERIAL
1	Body	ASTM A352-LCC
2	Retainer	ASTM A352-LCC
3	Ball	ASTM A276-316
4	Stem	ASTM A276-316
5	Seats	Defined by Seat Suffix Selected See "95" or "80" also "38" & "21"
6	Body Seal	Defined by Seat Suffix Selected
7	Stem Seals	Defined by Seat Suffix Selected
8	Stem Bearing	Defined by Seat Suffix Selected
9	Grounding Spring	316 Stainless Steel
10	Grounding Spring	316 Stainless Steel
11	Packing Gland	See Options Available
12	Stem Screw	Steel, Zinc Plated
13	Lever	ASTM A366 Steel with Vinyl Grip
14	Gland Plate	302 or 304 Stainless Steel
15	Stop	ASTM A108 Type 1215
16	Lock Plate	ASTM A366 Steel
17	Spacer	ASTM A276 Type 216
18	Stop Screw	SAE J429 Grade 2 Steel Zinc Plated
19	Gland Plate Screws	ASTM A193 B7

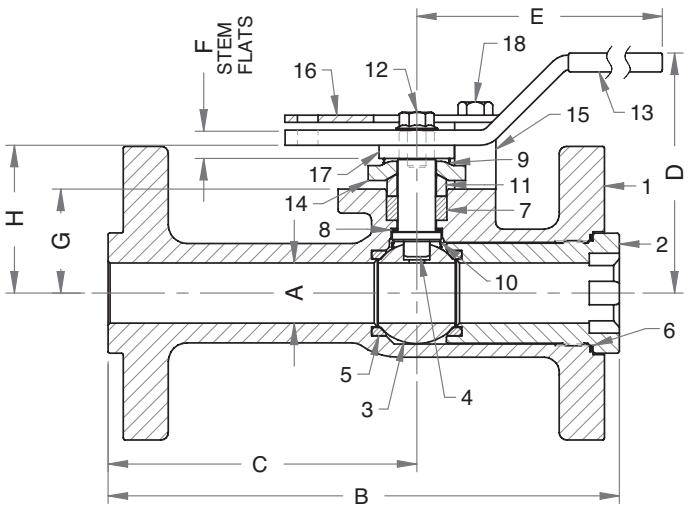

ACTUATOR MOUNTING

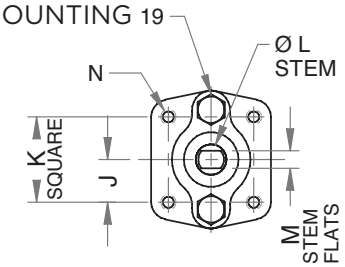

OPTIONS AVAILABLE

(MORE INFORMATION IN SECTION J)

- Complete the product number by adding a suffix (or multiple suffixes) to the base product number. A suffix for seat & seal materials must be selected.
- To specify multiple options, add the desired suffixes in the numerical order shown below. NOTE: Not all suffixes can be combined together.
- Minimum quantities may apply.

(SUFFIX)	OPTION
-04-	2-1/4" Stem Extension (Carbon Steel, Zinc Plated) (1" - 2")
-14-	Side Vented Ball (Uni-Directional). Not Available with Plated CS Ball
-21-	UHMWPE Seats, Graphite Packing, Spiral Wound Graphite Body Seal, PEEK Bearing
-24-	Graphite Packing, Spiral Wound Graphite Body Seal, RPTFE Bearing (API 607, 6th Edition, ISO 10497:2010)
-26-	Chlorine Service. Vented. Special Cleaning. Assembled Dry. (for CS, Hastelloy and Ni-Cu Valves. Ball Must be Hastelloy or Ni-CU)
-38-	PEEK Seats, Graphite Packing, Spiral Wound Graphite Body Seal, PEEK Bearing
-45-	Less Lever and Nut (Bare Stem)
-49-	No Lubrication. Assembled Dry
-67-	Cleaned for Industrial Gas (CS Only)
-69-	Drilled & Tapped Purge Port with Plugs
-70-	4" Extended Bonnet
-76-	Live Loaded (Lever)
-77-	Live Loaded (Gear, Actuator)
-80-	TFM 1600 Seats, PTFE Chevron Packing, Spiral Wound PTFE Body Seal, PEEK Bearing
-82-	Flat Face Flanges
-90-	Double Packed 4" Extended Bonnet
-95-	Devlon® Seats, Graphite Packing, Spiral Wound Graphite Body Seal, PEEK Bearing
-9P-	Double Packed 4" Extended Bonnet with Monitoring Port
-CE-	CE Marking. See Page D-3 "Product Approvals" for Availability
-EF-	Graphite Packing (API 641 Compliant)
-EP-	Garlock EVSP Stem Packing with Spiral Wound Graphite Gasket (Fire Safe by Design)
-KB-	Kolsterised Ball
-MG-	Gear Operator with Standard Handwheel
-MH-	Gear Operator with Standard Handwheel & Locking Device
-MJ-	Gear Operator with Oversize Handwheel
-MK-	Gear Operator with Oversize Handwheel & Locking Device
-PH-	17-4 PH Stem
-TC-	Hydrostatic Test with Certified Report
-TD-	API 6D Test (Hydrostatic Testing)
-TR-	Hydrostatic Test with Certified Report & MTR
-TW-	Hydrostatic Test with Certified Report & Witnessed
-ZP1-	Fugitive Emissions Packing (Viton)
-ZP2-	Fugitive Emissions Packing (Buna-N)
-ZP3-	Fugitive Emissions Packing (Kalrez)

Pressure/Temperature Ratings - Page M-26, Graph No. 36

DIMENSIONS

PART NO.	SIZE	A	B	C	D	E	F	G	H	J	K	L	M	N	WT.
88L-F45-XX	1"	1.00	8.50	5.13	3.99	6.65	0.45	1.730	2.460	0.98	1.95	0.625	0.412	5/16-18	13.0

REV. 08JUL19

88L-F40 SERIES

LOW TEMP. CARBON STEEL ASME CLASS 600 FLANGED FULL PORT BALL VALVE
1-1/2" THRU 2-1/2"

5 YEAR WARRANTY MADE IN USA

FOR STANDARDS COMPLIANCE AND STANDARD FEATURES REFER TO PAGE D-3 AND RATED TO -50°F (-46°C).

STANDARD MATERIAL LIST

	PART	MATERIAL
1	Body	ASTM A352-LCC
2	Retainer	ASTM A352-LCC
3	Ball	ASTM A276-316 or A351-CF8M
4	Stem	ASTM A276-316
5	Seats	Defined by Seat Suffix Selected See "95" or "80" also "38" & "21"
6	Body Seal	Defined by Seat Suffix Selected
7	Stem Seals	Defined by Seat Suffix Selected
8	Stem Bearing	Defined by Seat Suffix Selected
9	Grounding Spring	316 Stainless Steel
10	Grounding Spring	316 Stainless Steel
11	Packing Gland	ASTM A108 Type 1215
12	Stem Nut	ASTM A194 Grade 8
13	Lever	ASTM A366 Steel with Vinyl Grip
14	Gland Plate	302 or 304 Stainless Steel
15	Stop	ASTM A108 Type 1215
16	Lock Plate	ASTM A366 Steel
17	Stop Screw	SAE J429 Grade 2
18	Gland Plate Screws	ASTM A193 B7
19	Body Joint Stud	ASTM A193 Grade B7
20	Body Joint Nut	ASTM A194 Grade 2H
21	Lock Washer	302 or 304 Stainless Steel

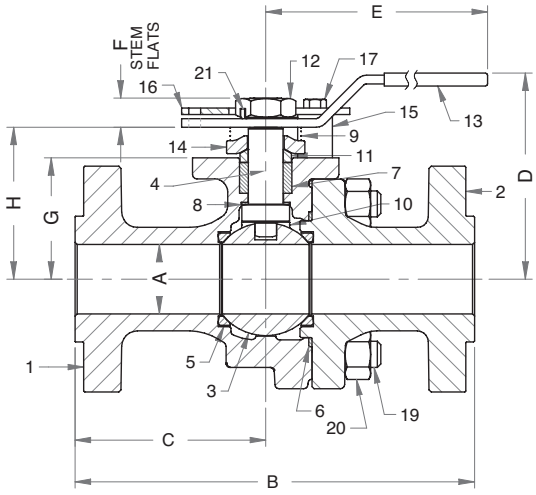

ACTUATOR MOUNTING

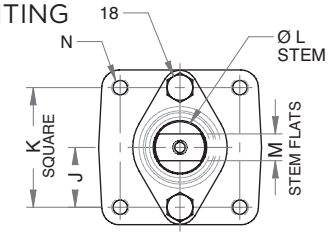

OPTIONS AVAILABLE

(MORE INFORMATION IN SECTION J)

- Complete the product number by adding a suffix (or multiple suffixes) to the base product number. A suffix for seat & seal materials must be selected.
- To specify multiple options, add the desired suffixes in the numerical order shown below. NOTE: Not all suffixes can be combined together.
- Minimum quantities may apply.

(SUFFIX)	OPTION
-14-	Side Vented Ball (Uni-Directional). Not Available with Plated CS Ball
-21-	UHMWPE Seats, Graphite Packing, Spiral Wound Graphite Body Seal, PEEK Bearing
-24-	Graphite Packing, Spiral Wound Graphite Body Seal, RPTFE Bearing (API 607, 6th Edition, ISO 10497:2010)
-26-	Chlorine Service. Vented. Special Cleaning. Assembled Dry. (for CS, Hastelloy and Ni-Cu Valves. Ball Must be Hastelloy or Ni-CU)
-38-	PEEK Seats, Graphite Packing, Spiral Wound Graphite Body Seal, PEEK Bearing
-45-	Less Lever and Nut (Bare Stem)
-49-	No Lubrication. Assembled Dry
-67-	Cleaned for Industrial Gas (CS Only)
-69-	Drilled & Tapped Purge Port with Plugs
-70-	4" Extended Bonnet
-76-	Live Loaded (Lever)
-77-	Live Loaded (Gear, Actuator)
-80-	TFM 1600 Seats, PTFE Chevron Packing, Spiral Wound PTFE Body Seal, PEEK Bearing
-82-	Flat Face Flanges
-90-	Double Packed 4" Extended Bonnet
-95-	Devlon® Seats, Graphite Packing, Spiral Wound Graphite Body Seal, PEEK Bearing
-9P-	Double Packed 4" Extended Bonnet with Monitoring Port
-CE-	CE Marking. See Page D-3 "Product Approvals" for Availability
-EF-	Graphite Packing (API 641 Compliant)
-EP-	Garlock EVSP Stem Packing with Spiral Wound Graphite Gasket (Fire Safe by Design)
-KB-	Kolsterised Ball
-MG-	Gear Operator with Standard Handwheel
-MH-	Gear Operator with Standard Handwheel & Locking Device
-MJ-	Gear Operator with Oversize Handwheel
-MK-	Gear Operator with Oversize Handwheel & Locking Device
-PH-	17-4 PH Stem
-TC-	Hydrostatic Test with Certified Report
-TD-	API 6D Test (Hydrostatic Testing)
-TR-	Hydrostatic Test with Certified Report & MTR
-TW-	Hydrostatic Test with Certified Report & Witnessed
-ZP1-	Fugitive Emissions Packing (Viton)
-ZP2-	Fugitive Emissions Packing (Buna-N)
-ZP3-	Fugitive Emissions Packing (Kalrez)

Pressure/Temperature Ratings -
Page M-26 & M-27, Graph Nos. 37 & 38

DIMENSIONS

PART NO.	SIZE	A	B	C	D	E	F	G	H	J	K	L	M	N	WT.
88L-F47-XX	1-1/2"	1.50	9.50	3.62	5.03	8.40	0.74	2.730	3.500	0.98	1.95	0.750	0.477	5/16-18	31.5
88L-F48-XX	2"	2.00	11.50	5.49	6.06	12.06	0.84	3.490	4.370	1.42	2.84	1.000	0.620	3/8-16	53.0
88L-F49-XX	2-1/2"	2.50	13.00	6.02	6.63	12.06	0.84	4.190	5.070	1.42	2.84	1.000	0.620	3/8-16	65.0

REV. 08JUL19

aalberts integrated piping systems

88L-F40 SERIES

LOW TEMP. CARBON STEEL ASME CLASS 600 FLANGED FULL PORT BALL VALVE
3" THRU 4"

5 YEAR WARRANTY MADE IN USA

FOR STANDARDS COMPLIANCE AND STANDARD FEATURES REFER TO PAGE D-3 AND RATED TO -50°F (-46°C).

STANDARD MATERIAL LIST

	PART	MATERIAL
1	Body	ASTM A352-LCC
2	Retainer	ASTM A352-LCC
3	Ball	ASTM A276-316 or A351-CF8M
4	Stem	ASTM A276 Type 316
5	Seats	Defined by Seat Suffix Selected See "95" or "80" also "38" & "21"
6	Body Seal	Defined by Seat Suffix Selected
7	Stem Seals	Defined by Seat Suffix Selected
8	Stem Bearing	Defined by Seat Suffix Selected
9	Grounding Spring	316 Stainless Steel
10	Grounding Spring	316 Stainless Steel
11	Packing Gland	ASTM A108 Type 1215
12	Stem Screw	304 Stainless Steel
13	Handle Adapter	ASTM A366 Steel with Vinyl Grip
14	Pipe Handle	Galvanized Steel (not shown)
15	Gland Plate	316 Stainless Steel
16	Stops	ASTM A108 Type 1215
17	Lock Plate	ASTM A366 Steel
18	Stop Screws	SAE J429 Grade 2
19	Gland Plate Screws	ASTM A193-B7
20	Body Joint Stud	ASTM A193 Grade B7
21	Body Joint Nut	ASTM A194 Grade 2H
22	Adapter Screw	18-8 Stainless Steel

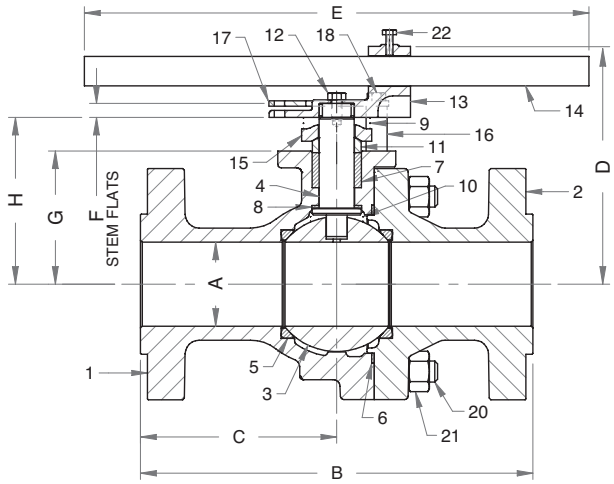

ACTUATOR MOUNTING

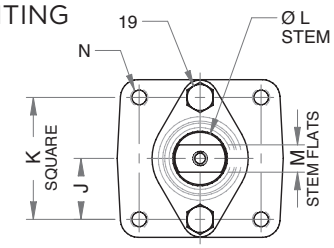

OPTIONS AVAILABLE

(MORE INFORMATION IN SECTION J)

- Complete the product number by adding a suffix (or multiple suffixes) to the base product number. A suffix for seat & seal materials must be selected.
- To specify multiple options, add the desired suffixes in the numerical order shown below. NOTE: Not all suffixes can be combined together.
- Minimum quantities may apply.

(SUFFIX)	OPTION
-14-	Side Vented Ball (Uni-Directional). Not Available with Plated CS Ball
-21-	UHMWPE Seats, Graphite Packing, Spiral Wound Graphite Body Seal, PEEK Bearing
-24-	Graphite Packing, Spiral Wound Graphite Body Seal, RPTFE Bearing (API 607, 6th Edition, ISO 10497:2010)
-26-	Chlorine Service. Vented. Special Cleaning. Assembled Dry. (for CS, Hastelloy and Ni-Cu Valves. Ball Must be Hastelloy or Ni-CU)
-38-	PEEK Seats, Graphite Packing, Spiral Wound Graphite Body Seal, PEEK Bearing
-45-	Less Lever and Nut (Bare Stem)
-49-	No Lubrication. Assembled Dry
-67-	Cleaned for Industrial Gas (CS Only)
-69-	Drilled & Tapped Purge Port with Plugs
-70-	4" Extended Bonnet
-76-	Live Loaded (Lever)
-77-	Live Loaded (Gear, Actuator)
-80-	TFM 1600 Seats, PTFE Chevron Packing, Spiral Wound PTFE Body Seal, PEEK Bearing
-82-	Flat Face Flanges
-90-	Double Packed 4" Extended Bonnet
-95-	Devlon® Seats, Graphite Packing, Spiral Wound Graphite Body Seal, PEEK Bearing
-9P-	Double Packed 4" Extended Bonnet with Monitoring Port
-CE-	CE Marking. See Page D-3 "Product Approvals" for Availability
-EF-	Graphite Packing (API 641 Compliant)
-EP-	Garlock EVSP Stem Packing with Spiral Wound Graphite Gasket (Fire Safe by Design)
-KB-	Kolsterised Ball
-MG-	Gear Operator with Standard Handwheel
-MH-	Gear Operator with Standard Handwheel & Locking Device
-MJ-	Gear Operator with Oversize Handwheel
-MK-	Gear Operator with Oversize Handwheel & Locking Device
-PH-	17-4 PH Stem
-TC-	Hydrostatic Test with Certified Report
-TD-	API 6D Test (Hydrostatic Testing)
-TR-	Hydrostatic Test with Certified Report & MTR
-TW-	Hydrostatic Test with Certified Report & Witnessed
-ZP1-	Fugitive Emissions Packing (Viton)
-ZP2-	Fugitive Emissions Packing (Buna-N)
-ZP3-	Fugitive Emissions Packing (Kalrez)

Pressure/Temperature Ratings - Page M-27, Graph No. 38

DIMENSIONS

PART NO.	SIZE	A	B	C	D	E	F	G	H	J	K	L	M	N	WT.
88L-F40-XX	3"	3.00	14.00	7.00	8.55	18.00	0.50	4.750	5.946	1.42	2.84	1.250	0.725	3/8-16	101.0
88L-F4A-XX	4"	4.00	17.00	7.19	11.20	34.00	0.75	6.630	8.081	1.74	3.48	1.500	0.780	1/2-13	194.0

REV. 08JUL19

88L-F40 SERIES

LOW TEMP. CARBON STEEL ASME CLASS 600 FLANGED FULL PORT BALL VALVE
6"

5 YEAR WARRANTY MADE IN USA

FOR STANDARDS COMPLIANCE AND STANDARD FEATURES REFER TO PAGE D-3 AND RATED TO -50°F (-46°C).

STANDARD MATERIAL LIST

	PART	MATERIAL
1	Body	ASTM A352-LCC
2	Retainer	ASTM A352-LCC
3	Ball	ASTM A276-316 or A351-CF8M
4	Stem	ASTM A276-316
5	Seats	Defined by Seat Suffix Selected See "95" or "80" also "38" & "21"
6	Body Seal	Defined by Seat Suffix Selected
7	Stem Seals	Defined by Seat Suffix Selected
8	Stem Bearing	Defined by Seat Suffix Selected
9	Grounding Spring	316 Stainless Steel
10	Grounding Spring	316 Stainless Steel
11	Packing Gland	ASTM A108 Type 1215
12	Stem Screw	304 Stainless Steel
13	Handle Adapter	ASTM A366 Steel with Vinyl Grip
14	Pipe Handle	Galvanized Steel (not shown)
15	Gland Plate	316 Stainless Steel
16	Stops	ASTM A108 Type 1215
17	Lock Plate	ASTM A366 Steel
18	Stop Screws	SAE J429 Grade 2
19	Gland Plate Screws	ASTM A193-B7
20	Body Joint Stud	ASTM A193-Grade B7
21	Body Joint Nut	ASTM A194-Grade 2H
22	Adapter Screw	18-8 Stainless Steel

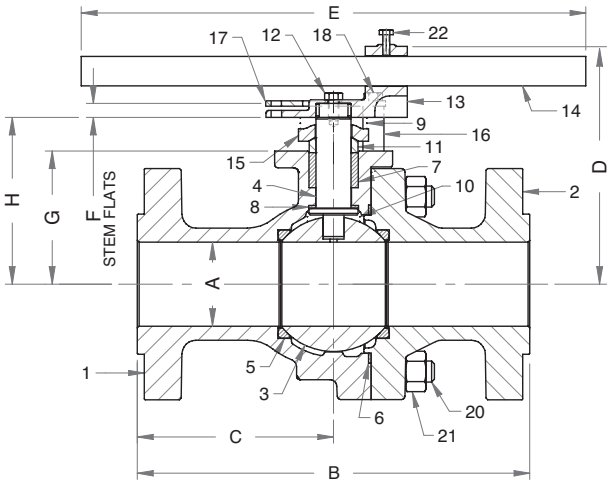

ACTUATOR MOUNTING

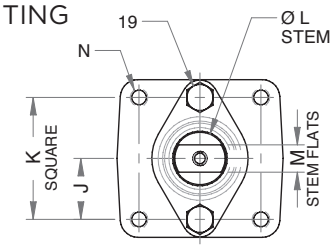

OPTIONS AVAILABLE

(MORE INFORMATION IN SECTION J)

- Complete the product number by adding a suffix (or multiple suffixes) to the base product number. A suffix for seat & seal materials must be selected.
- To specify multiple options, add the desired suffixes in the numerical order shown below. NOTE: Not all suffixes can be combined together.
- Minimum quantities may apply.

(SUFFIX)	OPTION
-14-	Side Vented Ball (Uni-Directional). Not Available with Plated CS Ball
-21-	UHMWPE Seats, Graphite Packing, Spiral Wound Graphite Body Seal, PEEK Bearing
-24-	Graphite Packing, Spiral Wound Graphite Body Seal, RPTFE Bearing (API 607, 6th Edition, ISO 10497:2010)
-26-	Chlorine Service. Vented. Special Cleaning. Assembled Dry. (for CS, Hastelloy and Ni-Cu Valves. Ball Must be Hastelloy or Ni-CU)
-38-	PEEK Seats, Graphite Packing, Spiral Wound Graphite Body Seal, PEEK Bearing
-45-	Less Lever and Nut (Bare Stem)
-49-	No Lubrication. Assembled Dry
-67-	Cleaned for Industrial Gas (CS Only)
-69-	Drilled & Tapped Purge Port with Plugs
-70-	4" Extended Bonnet
-76-	Live Loaded (Lever)
-77-	Live Loaded (Gear, Actuator)
-80-	TFM 1600 Seats, PTFE Chevron Packing, Spiral Wound PTFE Body Seal, PEEK Bearing
-82-	Flat Face Flanges
-90-	Double Packed 4" Extended Bonnet
-95-	Devlon® Seats, Graphite Packing, Spiral Wound Graphite Body Seal, PEEK Bearing
-9P-	Double Packed 4" Extended Bonnet with Monitoring Port
-CE-	CE Marking. See Page D-3 "Product Approvals" for Availability
-EF-	Graphite Packing (API 641 Compliant)
-EP-	Garlock EVSP Stem Packing with Spiral Wound Graphite Gasket (Fire Safe by Design)
-KB-	Kolsterised Ball
-MG-	Gear Operator with Standard Handwheel
-MH-	Gear Operator with Standard Handwheel & Locking Device
-MJ-	Gear Operator with Oversize Handwheel
-MK-	Gear Operator with Oversize Handwheel & Locking Device
-PH-	17-4 PH Stem
-TC-	Hydrostatic Test with Certified Report
-TD-	API 6D Test (Hydrostatic Testing)
-TR-	Hydrostatic Test with Certified Report & MTR
-TW-	Hydrostatic Test with Certified Report & Witnessed
-ZP1-	Fugitive Emissions Packing (Viton)
-ZP2-	Fugitive Emissions Packing (Buna-N)
-ZP3-	Fugitive Emissions Packing (Kalrez)

Pressure/Temperature Ratings - Page M-27, Graph No. 39

DIMENSIONS

PART NO.	SIZE	A	B	C	D	E	F	G	H	J	K	L	M	N	WT.
88L-F4C-XX	6"	6.00	22.00	9.94	13.64	45.00	1.00	8.190	9.915	2.298	3.48	2.000	1.375	3/4-10	500.0

REV. 08JUL19

aalberts integrated piping systems

88L-F40 SERIES

LOW TEMP. CARBON STEEL ASME CLASS 600 FLANGED FULL PORT BALL VALVE
8"

5 YEAR WARRANTY MADE IN USA

FOR STANDARDS COMPLIANCE AND STANDARD FEATURES REFER TO PAGE D-3 AND RATED TO -50°F (-46°C).

STANDARD MATERIAL LIST

	PART	MATERIAL
1	Body	ASTM A352-LCC
2	Retainer	ASTM A352-LCC
3	Ball	ASTM A276-316 or A351-CF8M
4	Stem	ASTM A276-316
5	Seats	Defined by Seat Suffix Selected See "95" or "80" also "38" & "21"
6	Body Seal	Defined by Seat Suffix Selected
7	Stem Seals	Defined by Seat Suffix Selected
8	Stem Bearing	Defined by Seat Suffix Selected
9	Grounding Spring	316 Stainless Steel
10	Grounding Spring	316 Stainless Steel
11	Packing Gland	ASTM A108 Type 1215
12	Gland Plate	316 Stainless Steel
13	Gland Plate Screws	ASTM A193-B7
14	Body Joint Stud	ASTM A193 Grade B7
15	Body Joint Nut	ASTM A194 Grade 2H

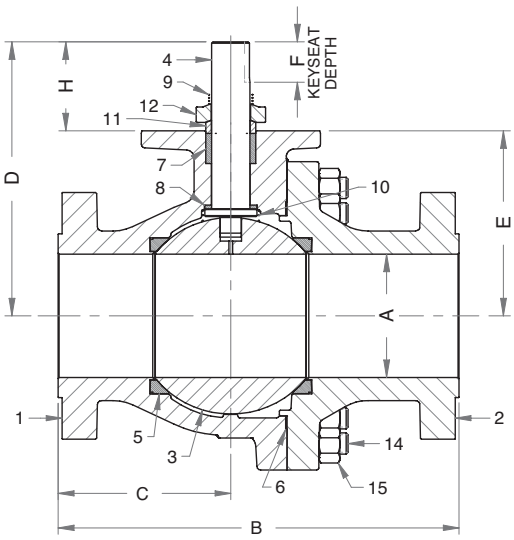

ACTUATOR MOUNTING

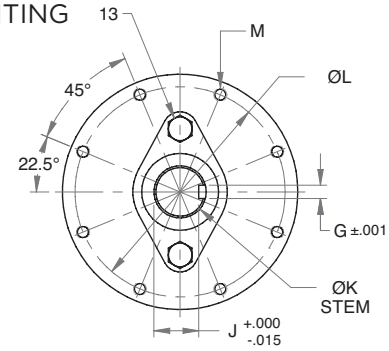

OPTIONS AVAILABLE

(MORE INFORMATION IN SECTION J)

- Complete the product number by adding a suffix (or multiple suffixes) to the base product number. A suffix for seat & seal materials must be selected.
- To specify multiple options, add the desired suffixes in the numerical order shown below. NOTE: Not all suffixes can be combined together.
- Minimum quantities may apply.

(SUFFIX)	OPTION
-14-	Side Vented Ball (Uni-Directional). Not Available with Plated CS Ball
-21-	UHMWPE Seats, Graphite Packing, Spiral Wound Graphite Body Seal, PEEK Bearing
-24-	Graphite Packing, Spiral Wound Graphite Body Seal, RPTFE Bearing (API 607, 6th Edition, ISO 10497:2010)
-26-	Chlorine Service. Vented. Special Cleaning. Assembled Dry. (for CS, Hastelloy and Ni-Cu Valves. Ball Must be Hastelloy or Ni-CU)
-38-	PEEK Seats, Graphite Packing, Spiral Wound Graphite Body Seal, PEEK Bearing
-45-	Less Lever and Nut (Bare Stem)
-49-	No Lubrication. Assembled Dry
-67-	Cleaned for Industrial Gas (CS Only)
-69-	Drilled & Tapped Purge Port with Plugs
-70-	4" Extended Bonnet
-76-	Live Loaded (Lever)
-77-	Live Loaded (Gear, Actuator)
-80-	TFM 1600 Seats, PTFE Chevron Packing, Spiral Wound PTFE Body Seal, PEEK Bearing
-82-	Flat Face Flanges
-90-	Double Packed 4" Extended Bonnet
-95-	Devlon® Seats, Graphite Packing, Spiral Wound Graphite Body Seal, PEEK Bearing
-9P-	Double Packed 4" Extended Bonnet with Monitoring Port
-CE-	CE Marking. See Page D-3 "Product Approvals" for Availability
-EF-	Graphite Packing (API 641 Compliant)
-EP-	Garlock EVSP Stem Packing with Spiral Wound Graphite Gasket (Fire Safe by Design)
-KB-	Kolsterised Ball
-MG-	Gear Operator with Standard Handwheel
-MH-	Gear Operator with Standard Handwheel & Locking Device
-MJ-	Gear Operator with Oversize Handwheel
-MK-	Gear Operator with Oversize Handwheel & Locking Device
-PH-	17-4 PH Stem
-TC-	Hydrostatic Test with Certified Report
-TD-	API 6D Test (Hydrostatic Testing)
-TR-	Hydrostatic Test with Certified Report & MTR
-TW-	Hydrostatic Test with Certified Report & Witnessed
-ZP1-	Fugitive Emissions Packing (Viton)
-ZP2-	Fugitive Emissions Packing (Buna-N)
-ZP3-	Fugitive Emissions Packing (Kalrez)

Pressure/Temperature Ratings - Page M-27, Graph No. 39

DIMENSIONS

PART NO.	SIZE	A	B	C	D	E	F	G	H	J	K	L	M	WT.
88L-F4E-XX	8"	8.00	26.00	11.20	17.77	12.00	2.25*	0.627	5.77	2.133	2.49	10.00	5/8-11	920.0

** Keyway Length*

REV. 08JUL19

SECTION D

REVISIONS

PAGE	DATE	DESCRIPTION
D-5 THRU D-22	18JUL19	Added "-UA" (AIS (American Iron & Steel) Compliant) suffix option
D-5 THRU D-54	08JUL19	Changed option suffix "-80" to TFM 1600 Seats, PTFE Chevron Packing, Spiral Wound PTFE Body Seal, PEEK Bearing
	29APR19	Changed seat material to TFM 1700 Added suffix "-EF", "-ZP1", "-ZP2", "-ZP3" API 641 Compliant Packings
	04MAY17	Added suffix "-CE" CE Marking
	12APR16	Added suffix "-KF". PCTFE Stem Bearing
D-9, D-17, D-27, D-35, D-43, D-51, D-59, D-67, D-77, D-85, D-92	10SEP19	Changed 1/2" & 3/4" Dimensions - D, E, F, H; added "A" to end of Part No.
	29APR19	Removed 1/2" & 3/4" Standard Materials List and drawing. All sizes now have the same design.
D-55 THRU D-72	18JUL19	Added "-UA" (AIS (American Iron & Steel) Compliant) suffix option
D-55 THRU D-88	08JUL19	Changed option suffix "-80" to TFM 1600 Seats, PTFE Chevron Packing, Spiral Wound PTFE Body Seal, PEEK Bearing
	29APR19	Changed seat material to TFM 1700 Added suffix "-EF", "-ZP1", "-ZP2", "-ZP3" API 641 Compliant Packings
	04MAY17	Added suffix "-CE" CE Marking
	29JUN16	Changed option suffix "-14" to Side Vented Ball (Uni-Directional). Not Available with Plated CS Ball Changed option suffix "-26" to Chlorine Service. Vented. Special Cleaning. Assembled Dry. (for CS, Hastelloy and Ni-Cu Valves. Ball Must be Hastelloy or Ni-CU)
	12APR16	Added suffix "-KF". PCTFE Stem Bearing
D-95 THRU D-102	08JUL19	Changed option suffix "-80" to TFM 1600 Seats, PTFE Chevron Packing, Spiral Wound PTFE Body Seal, PEEK Bearing
	29APR19	Changed seat material to TFM 1700 Added suffix "-EF", "-ZP1", "-ZP2", "-ZP3" API 641 Compliant Packings
	04MAY17	Added suffix "-CE" CE Marking
	12APR16	Added suffix "-KF". PCTFE Stem Bearing
D-115 THRU D-119	08JUL19	Changed option suffix "-80" to TFM 1600 Seats, PTFE Chevron Packing, Spiral Wound PTFE Body Seal, PEEK Bearing
	29APR19	Added suffix "-EF", "-ZP1", "-ZP2", "-ZP3" API 641 Compliant Packings
	04MAY17	Added suffix "-CE" CE Marking Clarified the text under Options Available Header
D-120 THRU D-129	18JUL19	Changed option suffix "-80" to TFM 1600 Seats, PTFE Chevron Packing, Spiral Wound PTFE Body Seal, PEEK Bearing
	29APR19	Added suffix "-EF", "-ZP1", "-ZP2", "-ZP3" API 641 Compliant Packings
	04MAY17	Added suffix "-CE" CE Marking Clarified the text under Options Available Header
	08MAR17	Removed "-MP" option
	29JUN16	Changed option suffix "-14" to Side Vented Ball (Uni-Directional). Not Available with Plated CS Ball Changed option suffix "-26" to Chlorine Service. Vented. Special Cleaning. Assembled Dry. (for CS, Hastelloy and Ni-Cu Valves. Ball Must be Hastelloy or Ni-CU)

87S-100 SERIES

304L STAINLESS STEEL ASME CLASS 150 FLANGED STD. PORT BALL VALVE
1-1/2" THRU 2"

5 YEAR WARRANTY MADE IN USA

FOR STANDARDS COMPLIANCE AND STANDARD FEATURES REFER TO PAGE D-3.

STANDARD MATERIAL LIST

	PART	MATERIAL
1	Body	304L Stainless Steel
2	Retainer	304L Stainless Steel
3	Ball	304L Stainless Steel
4	Stem	304L Stainless Steel
5	Packing Gland	304L Stainless Steel
6	Stem Seals	PTFE
7	Seats	TFM 1700
8	Gland Screws	ASTM A193 B8 Class 1
9	Gland Plate	302 or 304 Stainless Steel
10	Stem Nut	316 Stainless Steel
11	Lever	302 or 304 Stainless Steel with Vinyl Grip
12	Stem Bearing	RPTFE
13	Stop	ASTM A276 Type 316
14	Stop Screw	18-8 Stainless Steel
15	Lock Plate	302 or 304 Stainless Steel
16	Body Seal	RPTFE
17	Lockwasher	302 or 304 Stainless Steel
18	Grounding Spring	Stainless Steel

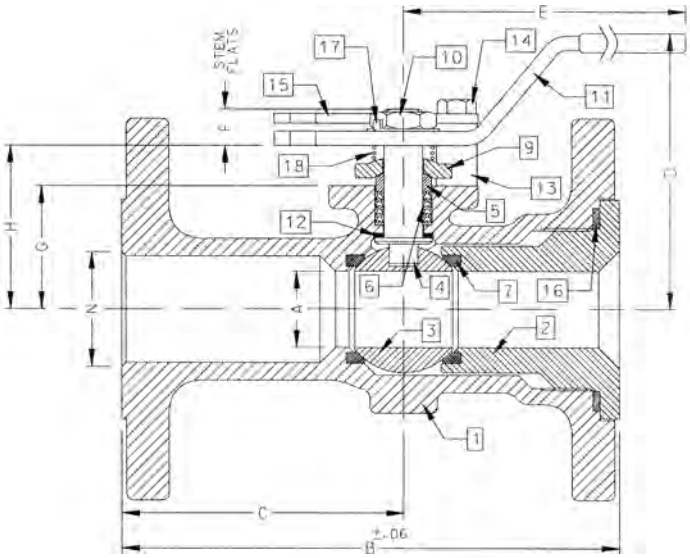

ACTUATOR MOUNTING

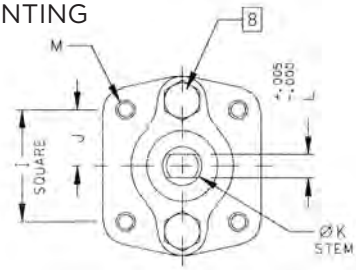

OPTIONS AVAILABLE

(MORE INFORMATION IN SECTION J)

- Minimum quantities apply.
- To specify an option, replace the "01" standard suffix with the suffix of the option.
- To specify multiple options, replace the "01" suffix with the desired suffixes in the numerical order shown below. NOTE: Not all suffixes can be combined together.

(SUFFIX)	OPTION
-01	Standard Configuration
-04-	2-1/4" Stem Extension (Carbon Steel, Zinc Plated)
-14-	Side Vented Ball (Uni-Directional)
-15-	Wheel Handle, Steel
-21-	UHMWPE Seats
-24-	Graphite Packing, Spiral Wound Graphite Body Seal, RPTFE Bearing (API 607, 6th Edition, ISO 10497:2010)
-35-	PTFE Seats and Seals
-38-	PEEK Seats and Graphite Packing
-49-	No Lubrication. Assembled Dry
-57-	Oxygen Cleaned
-65-	MPTFE Seats and Graphite Packing (Fire Safe)
-69-	Drilled and Tapped Purge Port with Plug
-70-	4" Extended Bonnet
-73-	316 Stainless Steel Spiral Wound Gaskets with PTFE Filler
-76-	Live Loaded (Lever)
-77-	Live Loaded (Gear, Actuator)
-80-	TFM 1600 Seats, PTFE Chevron Packing, Spiral Wound PTFE Body Seal PEEK Bearing
-82-	Flat Face Flanges
-90-	Double Packed 4" Extended Bonnet
-9P-	Double Packed 4" Extended Bonnet with Monitoring Port
-CE-	CE Marking. See Page D-3 "Product Approvals" for Availability
-EF-	Graphite Packing (API 641 Compliant)
-EP-	Garlock EVSP Stem Packing with Spiral Wound Graphite Gasket (Fire Safe by Design)
-KF-	PCTFE Stem Bearing
-MP-	Positive Material Identification
-TC-	With Test Certificate
-TD-	Tested to API Spec 6D
-UA-	AIS (American Iron & Steel) Compliant
-UL-	UL & CSA Listed (with Markings)
-ZP1-	Fugitive Emissions Packing (Viton)
-ZP2-	Fugitive Emissions Packing (Buna-N)
-ZP3-	Fugitive Emissions Packing (Kalrez)

Pressure/Temperature Ratings - Page M-9, Graph No. 2

DIMENSIONS

PART NO.	SIZE	A	B	C	D	E	F	G	H	I	J	K	L	M	N	WT.
87S-107-01	1-1/2"	1.25	6.50	3.50	4.85	6.53	0.47	1.85	2.38	1.392	0.696	0.500	0.287	1/4-20	1.50	9
87S-108-01	2"	1.50	7.00	3.69	4.62	6.65	0.72	2.41	3.09	1.949	0.974	0.625	0.412	5/16-18	2.00	18

87S-200 SERIES

304L STAINLESS STEEL ASME CLASS 150 FLANGED FULL PORT BALL VALVE
1/2" THRU 1"

5 YEAR WARRANTY MADE IN USA

FOR STANDARDS COMPLIANCE AND STANDARD FEATURES REFER TO PAGE D-3.

STANDARD MATERIAL LIST

	PART	MATERIAL
1	Body	304L Stainless Steel
2	Retainer	304L Stainless Steel
3	Ball	304L Stainless Steel
4	Stem	304L Stainless Steel
5	Packing Gland	304L Stainless Steel
6	Stem Seals	PTFE
7	Seats	TFM 1700
8	Gland Screws	ASTM A193 B8 Class 1
9	Gland Plate	302 or 304 Stainless Steel
10	Stem Nut	316 Stainless Steel
11	Lever	302 or 304 with Vinyl Grip
12	Stem Bearing	RPTFE
13	Stop	ASTM A276 Type 316
14	Stop Screw	18-8 Stainless Steel
15	Lock Plate	302 or 304 Stainless Steel
16	Body Seal	RPTFE
17	Lockwasher	302 or 304 Stainless Steel
18	Grounding Spring	Stainless Steel

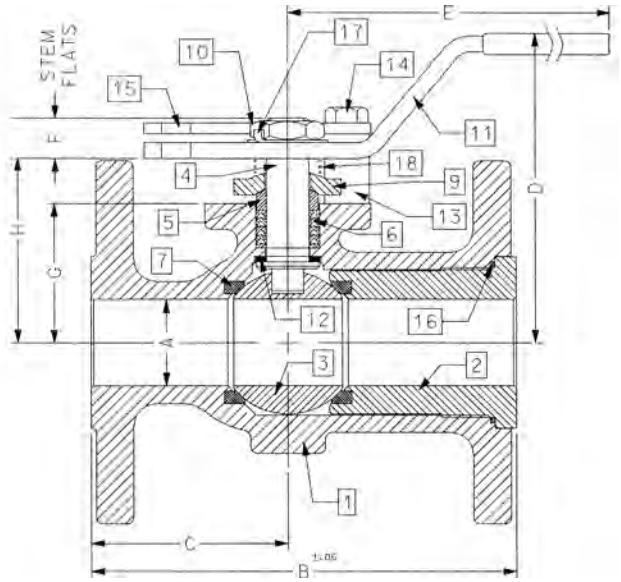

OPTIONS AVAILABLE

(MORE INFORMATION IN SECTION J)

- Minimum quantities apply.
- To specify an option, replace the "01" standard suffix with the suffix of the option.
- To specify multiple options, replace the "01" suffix with the desired suffixes in the numerical order shown below. NOTE: Not all suffixes can be combined together.

(SUFFIX)	OPTION
-01	Standard Configuration
-04-	2-1/4" Stem Extension (Carbon Steel, Zinc Plated)
-14-	Side Vented Ball (Uni-Directional)
-15-	Wheel Handle, Steel
-21-	UHMWPE Seats
-24-	Graphite Packing, Spiral Wound Graphite Body Seal, RPTFE Bearing (API 607, 6th Edition, ISO 10497:2010)
-35-	PTFE Seats and Seals
-38-	PEEK Seats and Graphite Packing
-49-	No Lubrication. Assembled Dry
-57-	Oxygen Cleaned
-65-	MPTFE Seats and Graphite Packing (Fire Safe)
-69-	Drilled and Tapped Purge Port with Plugs
-70-	4" Extended Bonnet
-73-	316 Stainless Steel Spiral Wound Gaskets with PTFE Filler
-76-	Live Loaded (Lever)
-77-	Live Loaded (Gear, Actuator)
-80-	TFM 1600 Seats, PTFE Chevron Packing, Spiral Wound PTFE Body Seal, PEEK Bearing
-82-	Flat Face Flanges
-90-	Double Packed 4" Extended Bonnet
-9P-	Double Packed 4" Extended Bonnet with Monitoring Port
-CE-	CE Marking. See Page D-3 "Product Approvals" for Availability
-EF-	Graphite Packing (API 641 Compliant) (Not Available on 1/2" Size)
-EP-	Garlock EVSP Stem Packing with Spiral Wound Graphite Gasket (Fire Safe by Design)
-KF-	PCTFE Stem Bearing
-MP-	Positive Material Identification
-TC-	With Test Certificate
-TD-	Tested to API Spec 6D
-UA-	AIS (American Iron & Steel) Compliant
-UL-	UL & CSA Listed (with Markings)
-ZP1-	Fugitive Emissions Packing (Viton)
-ZP2-	Fugitive Emissions Packing (Buna-N)
-ZP3-	Fugitive Emissions Packing (Kalrez)

Pressure/Temperature Ratings - Page M-9, Graph No. 2

ACTUATOR MOUNTING

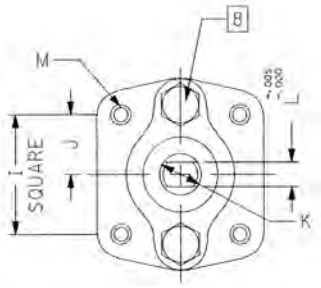

DIMENSIONS

PART NO.	SIZE	A	B	C	D	E	F	G	H	I	J	K	L	M	WT.
87S-203-01A	1/2"	0.50	4.25	2.06	2.74	5.12	0.24	1.09	1.44	1.00	0.500	0.375	0.245	10-24	5
87S-204-01A	3/4"	0.75	4.62	2.18	3.43	5.54	0.22	1.65	2.13	1.392	0.696	0.500	0.312	1/4-20	6
87S-205-01	1"	1.00	5.00	2.32	4.62	6.53	0.47	1.62	2.15	1.392	0.696	0.500	0.287	1/4-20	7

aalberts integrated piping systems

87S-700 SERIES

304L STAINLESS STEEL ASME CLASS 300 FLANGED STD. PORT BALL VALVE
1-1/2" THRU 2"

5 YEAR WARRANTY MADE IN USA

FOR STANDARDS COMPLIANCE AND STANDARD FEATURES REFER TO PAGE D-3.

STANDARD MATERIAL LIST

	PART	MATERIAL
1	Body	304L Stainless Steel
2	Retainer	304L Stainless Steel
3	Ball	304L Stainless Steel
4	Stem	304L Stainless Steel
5	Packing Gland	304L Stainless Steel
6	Stem Seals	PTFE
7	Seats	TFM 1700
8	Gland Screws	ASTM A193 B8 Class 1
9	Gland Plate	302 & 304 Stainless Steel
10	Stem Nut	316 Stainless Steel
11	Lever	302 & 304 Stainless Steel with Vinyl Grip
12	Stem Bearing	RPTFE
13	Stop	ASTM A276 Type 316
14	Stop Screw	18-8 Stainless Steel
15	Lock Plate	302 or 304 Stainless Steel
16	Body Seal	RPTFE
17	Lockwasher	302 or 304 Stainless Steel
18	Grounding Spring	Stainless Steel

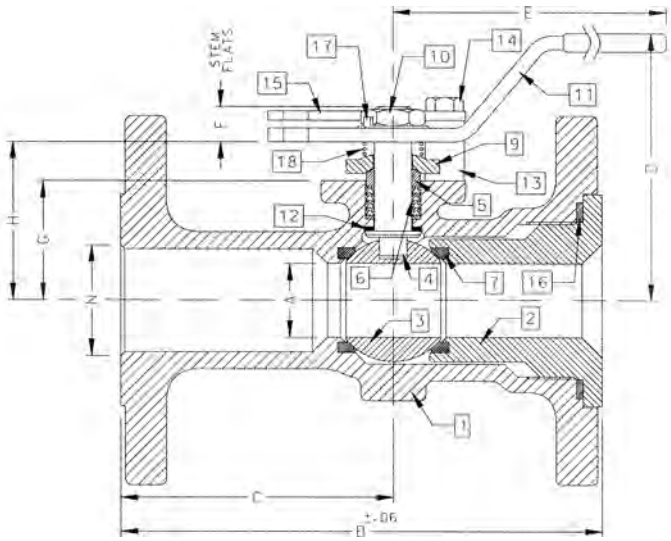

ACTUATOR MOUNTING

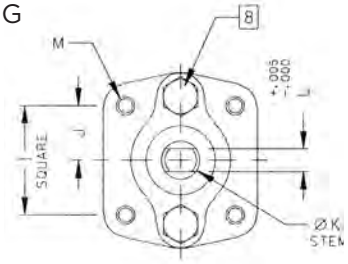

OPTIONS AVAILABLE

(MORE INFORMATION IN SECTION J)

- Minimum quantities apply.
- To specify an option, replace the "01" standard suffix with the suffix of the option.
- To specify multiple options, replace the "01" suffix with the desired suffixes in the numerical order shown below. NOTE: Not all suffixes can be combined together.

(SUFFIX)	OPTION
-01	Standard Configuration
-04-	2-1/4" Stem Extension (Carbon Steel, Zinc Plated)
-14-	Side Vented Ball (See Page J-2)
-15-	Wheel Handle, Steel
-21-	UHMWPE Seats
-24-	Graphite Packing, Spiral Wound Graphite Body Seal, RPTFE Bearing (API 607, 6th Edition, ISO 10497:2010)
-35-	PTFE Seats and Seals
-38-	PEEK Seats and Graphite Packing
-49-	No Lubrication. Assembled Dry
-57-	Oxygen Cleaned
-65-	MPTFE Seats and Graphite Packing (Fire Safe)
-69-	Drilled and Tapped Purge Ports with Plugs
-70-	4" Extended Bonnet
-73-	316 Stainless Steel Spiral Wound Gaskets with PTFE Filler
-76-	Live Loaded (Lever)
-77-	Live Loaded (Gear, Actuator)
-80-	TFM 1600 Seats, PTFE Chevron Packing, Spiral Wound PTFE Body Seal, PEEK Bearing
-82-	Flat Face Flanges
-90-	Double Packed 4" Extended Bonnet
-9P-	Double Packed 4" Extended Bonnet with Monitoring Port
-CE-	CE Marking. See Page D-3 "Product Approvals" for Availability
-EF-	Graphite Packing (API 641 Compliant)
-EP-	Garlock EVSP Stem Packing with Spiral Wound Graphite Gasket (Fire Safe by Design)
-KF-	PCTFE Stem Bearing
-MP-	Positive Material Identification
-TC-	With Test Certificate
-TD-	Tested to API Spec 6D
-UA-	AIS (American Iron & Steel) Compliant
-UL-	UL & CSA Listed (with Markings)
-ZP1-	Fugitive Emissions Packing (Viton)
-ZP2-	Fugitive Emissions Packing (Buna-N)
-ZP3-	Fugitive Emissions Packing (Kalrez)

Pressure/Temperature Ratings - Page M-11, Graph No. 6

DIMENSIONS

PART NO.	SIZE	A	B	C	D	E	F	G	H	I	J	K	L	M	N	WT.
87S-707-01A	1-1/2"	1.25	7.50	4.50	4.85	6.53	0.47	1.85	2.38	1.392	0.696	0.500	0.287	1/4-20	1.50	15.7
87S-708-01	2"	1.50	8.50	5.19	4.62	6.65	0.72	2.41	3.09	1.949	0.974	0.625	0.412	5/16-18	2.00	24.0

87S-900 SERIES

304L STAINLESS STEEL ASME CLASS 300 FLANGED FULL PORT BALL VALVE
1/2" THRU 1"

5 YEAR WARRANTY MADE IN USA

FOR STANDARDS COMPLIANCE AND STANDARD FEATURES REFER TO PAGE D-3.

STANDARD MATERIAL LIST

	PART	MATERIAL
1	Body	304L Stainless Steel
2	Retainer	304L Stainless Steel
3	Ball	304L Stainless Steel
4	Stem	304L Stainless Steel
5	Packing Gland	304L Stainless Steel
6	Stem Seals	PTFE
7	Seats	TFM 1700
8	Gland Screws	ASTM A193 B8 Class 1
9	Gland Plate	302 or 304 Stainless Steel
10	Stem Nut	316 Stainless Steel
11	Lever	302 or 304 with Vinyl Grip
12	Stem Bearing	RPTFE
13	Stop	ASTM A276 Type 316
14	Stop Screw	18-8 Stainless Steel
15	Lock Plate	302 or 304 Stainless Steel
16	Body Seal	RPTFE
17	Lockwasher	302 or 304 Stainless Steel
18	Grounding Spring	Stainless Steel

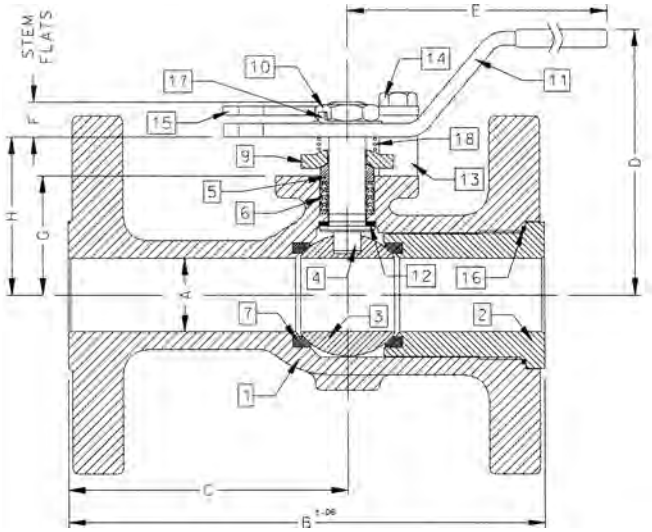

ACTUATOR MOUNTING

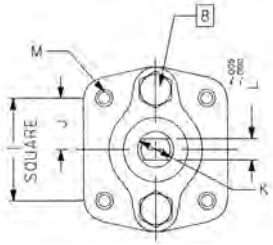

OPTIONS AVAILABLE

(MORE INFORMATION IN SECTION J)

- Minimum quantities apply.
- To specify an option, replace the "01" standard suffix with the suffix of the option.
- To specify multiple options, replace the "01" suffix with the desired suffixes in the numerical order shown below. NOTE: Not all suffixes can be combined together.

(SUFFIX)	OPTION
-01	Standard Configuration
-04-	2-1/4" Stem Extension (Carbon Steel, Zinc Plated)
-14-	Side Vented Ball (Uni-Directional)
-15-	Wheel Handle, Steel
-21-	UHMWPE Seats
-24-	Graphite Packing, Spiral Wound Graphite Body Seal, RPTFE Bearing (API 607, 6th Edition, ISO 10497:2010)
-35-	PTFE Seats and Seals
-38-	PEEK Seats and Graphite Packing
-49-	No Lubrication. Assembled Dry
-57-	Oxygen Cleaned
-65-	MPTFE Seats and Graphite Packing (Fire Safe)
-69-	Drilled and Tapped Purge Port with Plugs
-70-	4" Extended Bonnet
-73-	316 Stainless Steel Spiral Wound Gaskets with PTFE Filler
-76-	Live Loaded (Lever)
-77-	Live Loaded (Gear, Actuator)
-80-	TFM 1600 Seats, PTFE Chevron Packing, Spiral Wound PTFE Body Seal, PEEK Bearing
-82-	Flat Face Flanges
-90-	Double Packed 4" Extended Bonnet
-9P-	Double Packed 4" Extended Bonnet with Monitoring Port
-EF-	Graphite Packing (API 641 Compliant) (Not Available on 1/2" Size)
-CE-	CE Marking. See Page D-3 "Product Approvals" for Availability
-EP-	Garlock EVSP Stem Packing with Spiral Wound Graphite Gasket (Fire Safe by Design)
-KF-	PCTFE Stem Bearing
-MP-	Positive Material Identification
-TC-	With Test Certificate
-TD-	Tested to API Spec 6D
-UA-	AIS (American Iron & Steel) Compliant
-UL-	UL & CSA Listed (with Markings)
-ZP1-	Fugitive Emissions Packing (Viton)
-ZP2-	Fugitive Emissions Packing (Buna-N)
-ZP3-	Fugitive Emissions Packing (Kalrez)

Pressure/Temperature Ratings - Page M-11, Graph No. 6

DIMENSIONS

PART NO.	SIZE	A	B	C	D	E	F	G	H	I	J	K	L	M	WT.
87S-903-01A	1/2"	0.50	5.50	3.31	2.74	5.12	0.24	1.09	1.44	1.000	0.500	0.375	0.245	10-24	6
87S-904-01A	3/4"	0.75	6.00	3.56	3.43	5.54	0.22	1.65	2.13	1.392	0.696	0.500	0.287	1/4-20	9
87S-905-01	1"	1.00	6.50	3.82	4.62	6.53	0.47	1.62	2.15	1.392	0.696	0.500	0.287	1/4-20	11

aalberts integrated piping systems

"Apollo" Valves | INDUSTRIAL PRODUCTS

3-Way Ball Valves

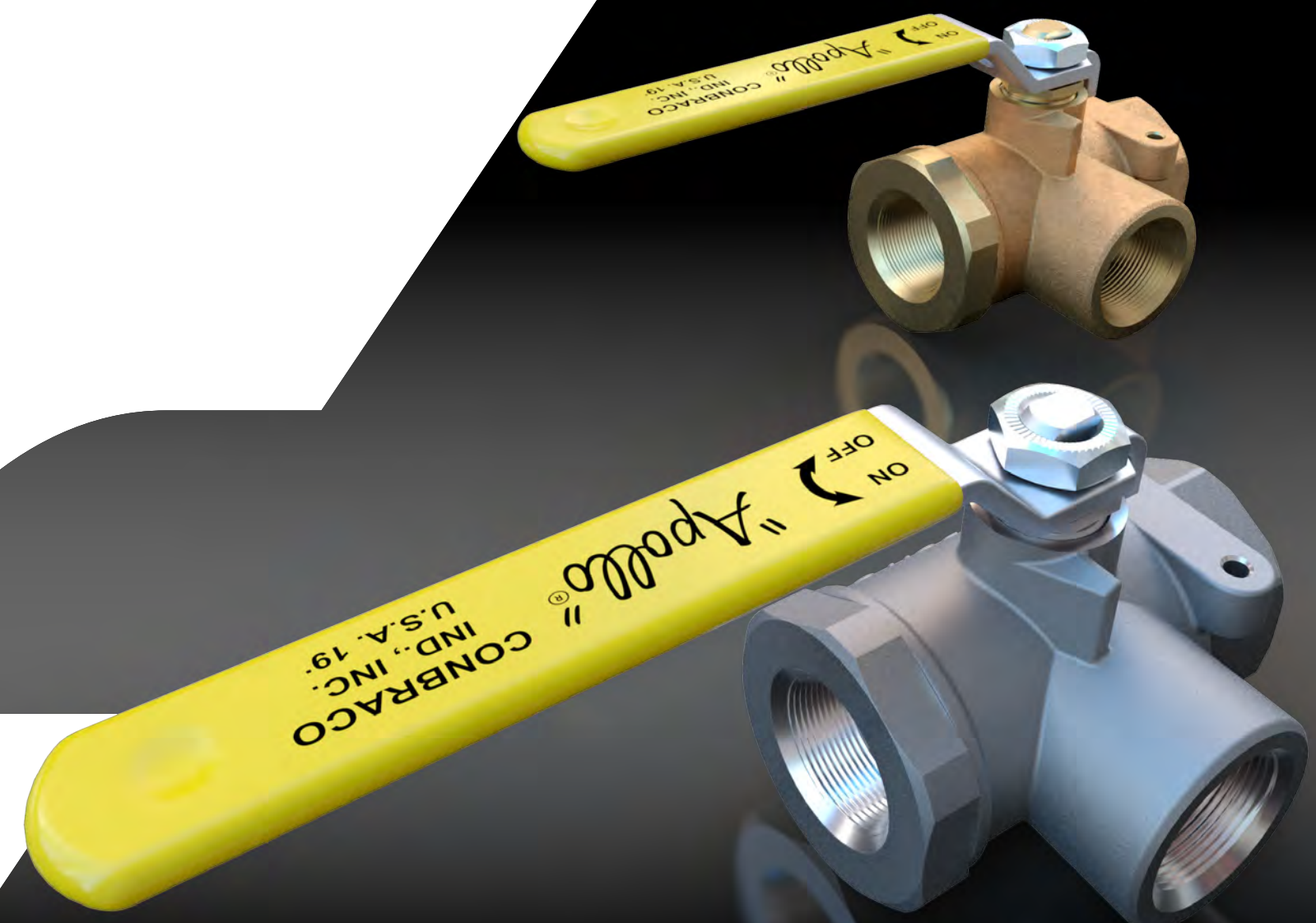

section E

SECTION E

3-WAY BALL VALVES

SERIES	DESCRIPTION	PAGE
	3-Way Valve Application	E-2
BRONZE		
70-600 SERIES	Threaded Bronze	E-3
70-900 SERIES	Solder Bronze	E-4
77-648 VALVE	Full Port Bronze	E-6
STAINLESS STEEL		
76-600 SERIES	Threaded Stainless Steel	E-5

3-WAY BALL VALVES

MIXING VS. DIVERTING

5 YEAR WARRANTY MADE IN USA

Illustrated are the three normal operating positions for a three-way valve. Apollo's three-way valve has only two (2) seats as illustrated and as such has limitations for use in both diverter and mixing valve applications. As can be seen from this illustration, there is no off position for port "C". Ports "A" and "B" cannot be off at the same time.

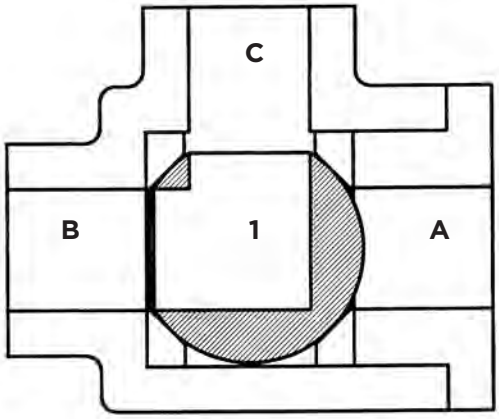

3-WAY VALVE AS A MIXING VALVE

When ports "A" and "B" are the inlets, and port "C" is the outlet, the valve becomes a mixing valve. With minor variations in position 2 the percentage of components at "A" and "B" can be varied to the outlet "C". This has been successfully applied to hydronic systems.

It may not be possible to isolate the ports from one another in any position. If the valve is in position 1, and the pressure at port "B" is significantly higher than port "A", the ball may be forced off the seat allowing mixing from all ports. Whether or not this is a problem depends on the application and its sensitivity to unwanted mixing.

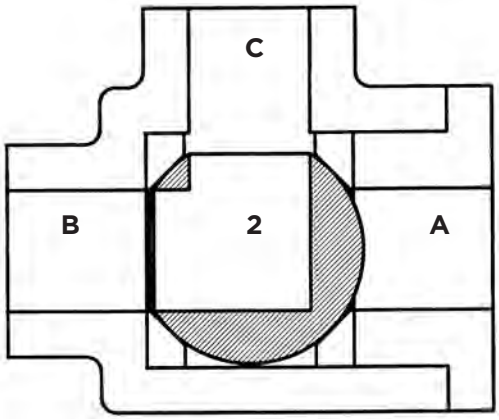

3-WAY VALVE AS A DIVERTER VALVE

When port "C" is the inlet, and ports "A" and "B" are the outlets, the valve is a diverter valve. With port "C" as the inlet, flow is diverted to either port "A" (position 1) or "B" (position 3). In position 2, inlet flow from "C" is split to "A" and "B".

Just as described above, it may not be possible to isolate any one port from the other two. That condition is most likely to occur in mixing applications. That is why the valve tends to be promoted as a diverter valve rather than a mixing valve.

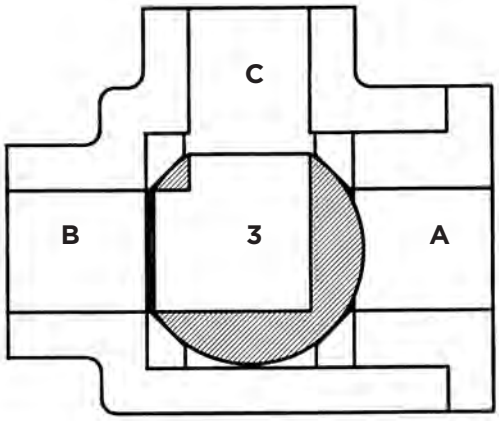

aalberts integrated piping systems

70-600 SERIES

3-WAY DIVERSION BRONZE BALL VALVE

Female NPT Thread, 400 CWP (psig), Cold Non-Shock.

FEATURES

- Two piece body
- Reinforced seats
- Blowout-proof stem design
- Adjustable packing gland

FLOW PATTERN

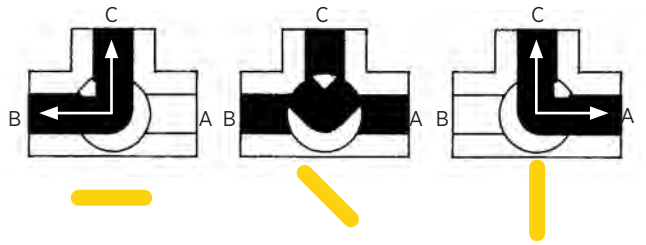

Lever Position | Lever Position | Lever Position

NOTE: Open port pressure must exceed closed port pressure.

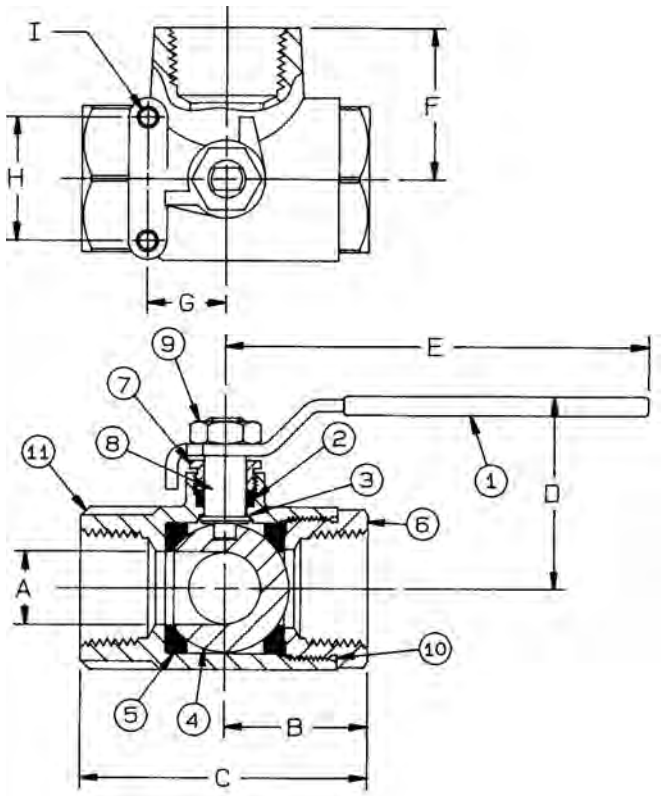

VARIATIONS AVAILABLE

- 70-640 Series (316 SS Ball & Stem)

OPTIONS AVAILABLE

(MORE INFORMATION IN SECTION J)

- Minimum quantities apply
- To specify an option, replace the "01" standard suffix with the suffix of the option.
- To specify multiple options, replace the "01" suffix with the desired suffixes in the numerical order shown below. NOTE: Not all suffixes can be combined together.

(SUFFIX)	OPTION	SIZES
-01	Standard Configuration	All
-P -01-	BSPP (Parallel) Thread Connection	1/4" to 2"
-T -01-	BSPT (Tapered) Thread Connection	1/4" to 2"
-02-	Stem Grounded	1/4" to 2"
-04-	2-1/4" Stem Extension (Carbon Steel, Zinc Plated)	1/4" to 2"
-05-	Plain Ball	1/4" to 2"
-10-	SS Lever & Nut	1/4" to 2"
-17-	Rough Chrome Plated - Bronze Valves	1/4" to 2"
-21-	UHMWPE Seats (Non-PTFE)	1/4" to 2"
-24-	Graphite Packing	1/4" to 2"
-27-	SS Latch-Lock Lever & Nut	1/4" to 2"
-35-	PTFE Trim	1/4" to 2"
-49-	No Lubrication. Assembled Dry.	1/4" to 2"
-50-	2-1/4" CS Locking Stem Extension	1/4" to 2"
-56-	Multifill Seats & Packing	1/4" to 2"
-57-	Oxygen Cleaned	1/4" to 2"
-60-	Grounded Ball & Stem	1/4" to 2"

Pressure/Temperature Ratings - Page M-10, Graph No. 3

STANDARD MATERIAL LIST

	PART	MATERIAL
1	Lever and grip	Steel, zinc plated w/vinyl
2	Stem packing	MPTFE
3	Stem bearing	RPTFE
4	Ball	B16 Brass, chrome plated
5	Seat (2)	RPTFE
6	Retainer	B16 Brass (1/4" to 1") B584-C84400 (1-1/4" to 2")
7	Gland nut	B16 Brass
8	Stem	B16 Brass
9	Lever nut	Steel, zinc plated
10	Body seal (1-1/2" to 2")	PTFE
11	Body	B584-C84400

DIMENSIONS

PART NO.	SIZE	A	B	C	D	E	F	G	H	I	WT.
70-601-01	1/4"	0.50	1.09	2.25	1.80	3.88	1.18	0.87	1.37	10-24	0.86
70-602-01	3/8"	0.50	1.12	2.27	1.80	3.88	1.18	0.87	1.37	10-24	0.84
70-603-01	1/2"	0.50	1.10	2.75	1.75	3.88	1.18	0.87	1.37	10-24	0.99
70-604-01	3/4"	0.68	1.50	3.00	2.12	4.87	1.62	0.87	1.37	10-24	1.91
70-605-01	1"	0.87	1.59	3.20	2.20	4.87	1.71	0.87	1.37	10-24	2.42
70-606-01	1-1/4"	1.00	1.99	3.98	2.69	5.50	2.09	0.94	1.50	1/4-20	4.27
70-607-01	1-1/2"	1.25	2.21	4.40	2.87	5.50	2.38	0.94	1.50	1/4-20	5.82
70-608-01	2"	1.50	2.34	4.69	3.07	5.50	2.50	0.94	1.50	1/4-20	8.55

70-900 SERIES

3-WAY DIVERSION BRONZE SOLDER BALL VALVE

Solder, 400 CWP (psig), Cold Non-Shock.

FEATURES

- Two-piece body
- Reinforced seats
- Blowout-proof stem design
- Adjustable packing gland

FLOW PATTERN

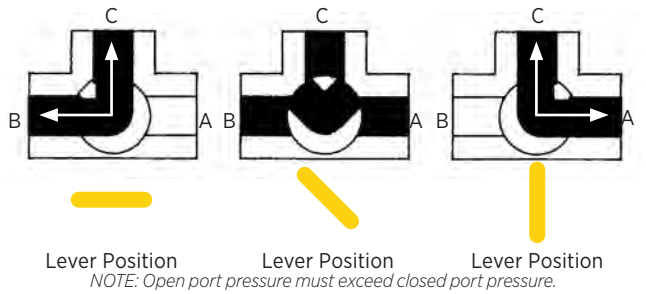

NOTE: Open port pressure must exceed closed port pressure.

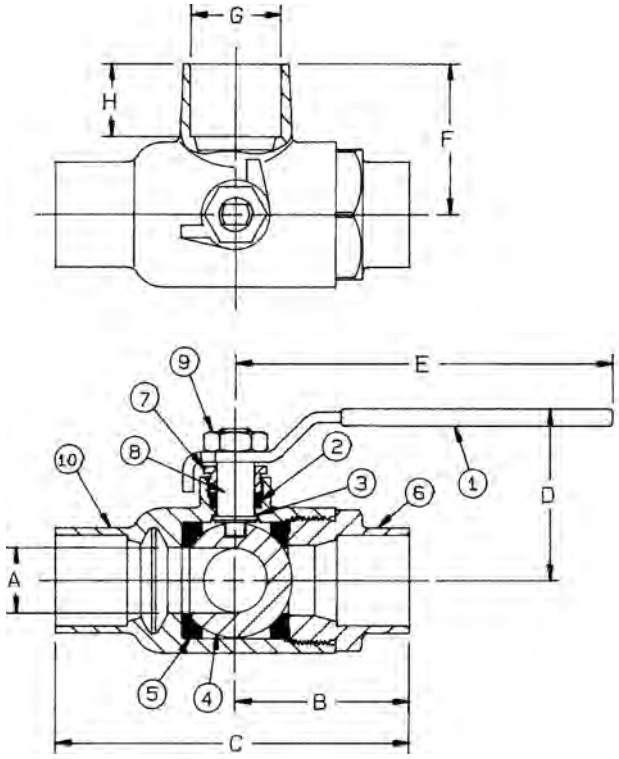

VARIATIONS AVAILABLE

- 70-940 Series (316 SS Ball & Stem)

OPTIONS AVAILABLE

(MORE INFORMATION IN SECTION J)

- Minimum quantities apply
- To specify an option, replace the "01" standard suffix with the suffix of the option.
- To specify multiple options, replace the "01" suffix with the desired suffixes in the numerical order shown below. NOTE: Not all suffixes can be combined together.

(SUFFIX)	OPTION	SIZES
-01	Standard Configuration	All
-02-	Stem Grounded	1/2" to 1"
-04-	2-1/4" Stem Extension (Carbon Steel, Zinc Plated)	1/2" to 1"
-05-	Plain Ball	1/2" to 1"
-10-	SS Lever & Nut	1/2" to 1"
-17-	Rough Chrome Plated - Bronze Valves	1/2" to 1"
-21-	UHMWPE Seats (Non-PTFE)	1/2" to 1"
-24-	Graphite Packing	1/2" to 1"
-27-	SS Latch-Lock Lever & Nut	1/2" to 1"
-35-	PTFE Trim	1/2" to 1"
-49-	No Lubrication. Assembled Dry.	1/2" to 1"
-50-	2-1/4" CS Locking Stem Extension	1/2" to 1"
-56-	Multifill Seats & Packing	1/2" to 1"
-57-	Oxygen Cleaned	1/2" to 1"
-60-	Grounded Ball & Stem	1/2" to 1"

Pressure/Temperature Ratings - Page M-10, Graph No. 3

STANDARD MATERIAL LIST

	PART	MATERIAL
1	Lever and grip	Steel, zinc plated w/vinyl
2	Stem packing	MPTFE
3	Stem bearing	RPTFE
4	Ball	B16 Brass, chrome plated
5	Seat (2)	RPTFE
6	Retainer	B16 Brass
7	Gland nut	B16 Brass
8	Stem	B16 Brass
9	Lever nut	Steel, zinc plated
10	Body	B584-C84400

The 70-900 is designed to be soft soldered into lines without disassembly. This allows a tested valve to be installed without disturbing the seats and seals in any way. Soldering temperature not to exceed 500ºF.

DIMENSIONS

PART NO.	SIZE	A	B	C	D	E	F	G	H	WT.
70-903-01	1/2"	0.50	1.44	2.33	2.04	3.87	1.34	.628	0.50	0.76
70-904-01	3/4"	0.68	1.94	3.04	2.08	4.78	1.69	.878	0.75	1.65
70-905-01	1"	.875	2.24	3.50	2.16	4.78	1.87	1.129	0.90	2.15

76-600 SERIES

3-WAY DIVERSION STAINLESS STEEL BALL VALVE

Female NPT Thread, 800 CWP (psig), Cold Non-Shock.

FEATURES

- Reinforced seats
- Meets NACE MR0175 (2000) & MR0103 (2012)
- Blowout-proof stem design
- Adjustable packing gland
- Investment cast body
- NSF/ANSI/CAN 61, Annex G

FLOW PATTERN

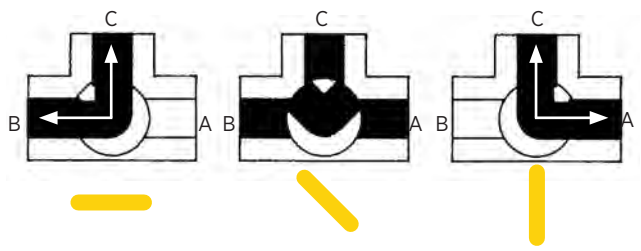

Lever Position | Lever Position | Lever Position

NOTE: Open port pressure must exceed closed port pressure.

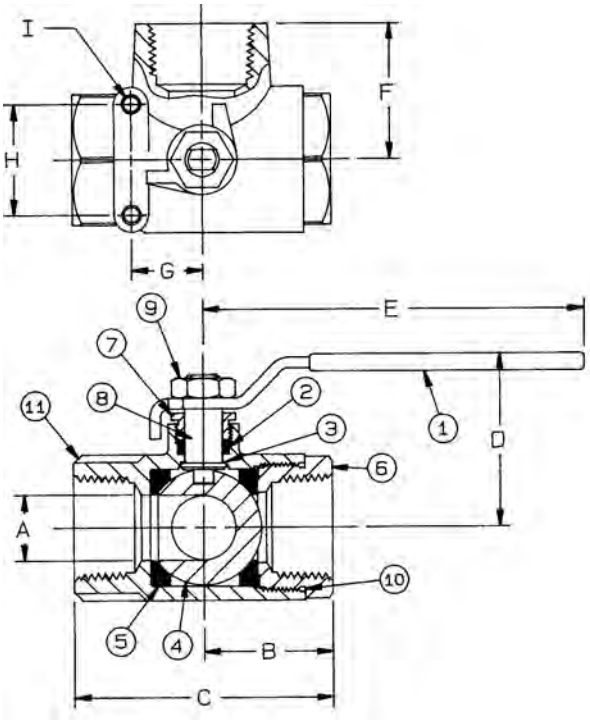

OPTIONS AVAILABLE

(MORE INFORMATION IN SECTION J)

- Minimum quantities apply
- To specify an option, replace the "01" standard suffix with the suffix of the option.
- To specify multiple options, replace the "01" suffix with the desired suffixes in the numerical order shown below. NOTE: Not all suffixes can be combined together.

(SUFFIX)	OPTION	SIZES
-01	Standard Configuration	All
-P -01-	BSPP (Parallel) Thread Connection	1/4" to 2"
-T -01-	BSPT (Tapered) Thread Connection	1/4" to 2"
-02-	Stem Grounded	1/4" to 2"
-04-	2-1/4" Stem Extension (Carbon Steel, Zinc Plated)	1/4" to 2"
-21-	UHMWPE Seats (Non-PTFE)	1/4" to 2"
-24-	Graphite Packing	1/4" to 2"
-27-	SS Latch-Lock Lever & Nut	1/4" to 2"
-35-	PTFE Trim	1/4" to 2"
-49-	No Lubrication. Assembled Dry.	1/4" to 2"
-50-	2-1/4" CS Locking Stem Extension	1/4" to 2"
-56-	Multifill Seats & Packing	1/4" to 2"
-57-	Oxygen Cleaned	1/4" to 2"
-60-	Grounded Ball & Stem	1/4" to 2"

Pressure/Temperature Ratings - Page M-18, Graph No. 21

STANDARD MATERIAL LIST

	PART	MATERIAL
1	Lever and grip	304 SS w/vinyl
2	Stem packing	MPTFE
3	Stem bearing	RPTFE
4	Ball	A276-316
5	Seat (2)	RPTFE
6	Retainer	A276-316 (1/4" to 1") A351-CF8M (1-1/2" to 2")
7	Gland nut	A276-316
8	Stem	A276-316
9	Lever nut	18-8 SS
10	Body seal (1-1/2" to 2")	PTFE
11	Body	A351-CF8M

DIMENSIONS

PART NO.	SIZE	A	B	C	D	E	F	G	H	I	WT.
76-601-01A	1/4"	0.437	1.12	2.32	1.80	3.88	1.18	0.875	1.375	10-24	0.70
76-602-01A	3/8"	0.437	1.12	2.32	1.80	3.88	1.18	0.875	1.375	10-24	0.68
76-603-01A	1/2"	0.505	1.12	2.32	1.80	3.88	1.18	0.875	1.375	10-24	0.75
76-604-01A	3/4"	0.687	1.46	2.96	2.06	4.78	1.50	0.875	1.375	10-24	1.45
76-605-01A	1"	0.875	1.65	3.32	2.15	4.78	1.68	0.875	1.375	10-24	1.86
76-607-01A	1-1/2"	1.265	2.17	4.34	3.03	5.43	2.40	0.937	1.500	1/4-20	4.67
76-608-01A	2"	1.515	2.73	5.43	3.22	5.43	2.81	0.937	1.500	1/4-20	7.02

77-648-27 SERIES

2" FULL PORT 3-WAY DIVERSION BRONZE BALL VALVE

Female NPT Thread, 2" 400 CWP (psig), Cold Non-Shock

FEATURES

- Cast Body & Retainer
- MPTFE seats and stem packing
- Four Bolt ISO Mounting ISO 5211 (F07)
- Blowout-proof stem design
- Adjustable packing gland
- SS lever and nut
- Latch lock lever

FLOW PATTERN C_V=190

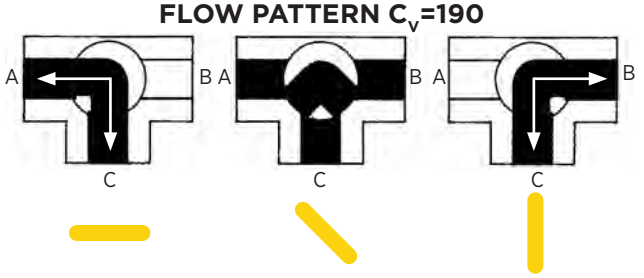

NOTE: Open port pressure must exceed closed port pressure.

STANDARD MATERIAL LIST

	PART	MATERIAL
1	Stem packing	MPTFE
2	Stem bearing	RPTFE
3	Ball	A276 316 SS
4	Seat (2)	MPTFE
5	Retainer	ASTM B584 C84400
6	Stop	A276 316 SS
7	Gland	ASTM B-16
8	Stem	A276 316 SS
9	Lever Nut	304 SS
10	Body	ASTM B584 C84400
11	Lever and Grip	SS w/Vinyl

Pressure/Temperature Ratings - Page M-10, Graph No. 3

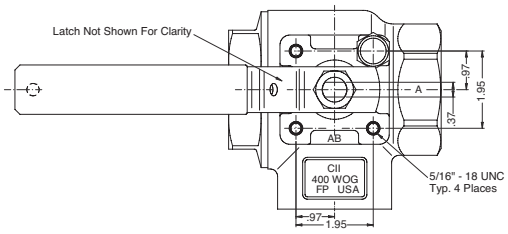

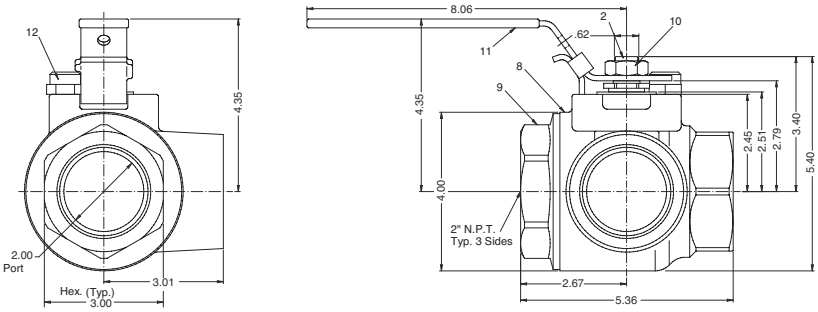

"Apollo" Valves | INDUSTRIAL PRODUCTS

Union End Ball Valves

section F

SECTION F

UNION END BALL VALVES

SERIES	DESCRIPTION	PAGE
BRONZE		
70-300 SERIES	Threaded Bronze, Single Union End	F-3
70-400 SERIES	Solder Bronze, Single Union End	F-4
CARBON STEEL		
73-300 SERIES	Threaded Carbon Steel, Double Union End (UL Listed)	F-5
73-400 SERIES	Socket Weld Carbon Steel, Double Union End (UL Listed)	F-6
STAINLESS STEEL		
76-300 SERIES	Threaded Stainless Steel, Double Union End	F-7
76-400 SERIES	Socket Weld Stainless Steel, Double Union End	F-8

70-300 SERIES

SINGLE UNION END BRONZE BALL VALVE

Threaded, Single Union End, 600 CWP (psig), Cold Non-Shock.
150 psig Saturated Steam.
Vacuum Service to 29 inches Hg.
MSS SP-110 Compliant.

FEATURES

- Reinforced seats
- Fluorocarbon O-Ring sealed single union requires only light torque to seal
- Blowout-proof stem design
- Adjustable packing gland

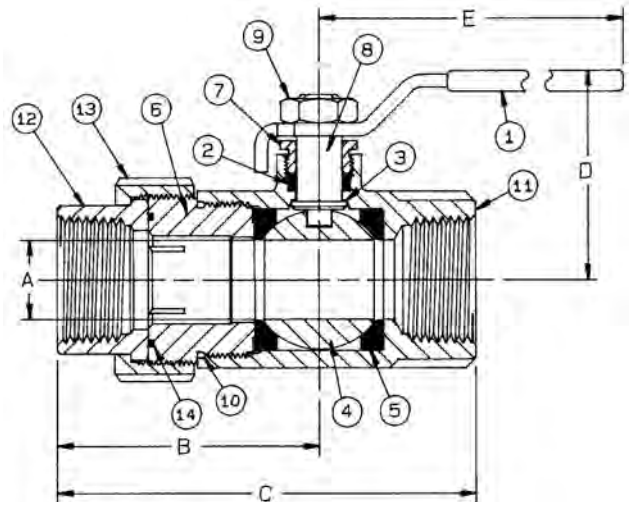

STANDARD MATERIAL LIST

	PART	MATERIAL
1	Lever and grip	Steel, zinc plated w/vinyl
2	Stem packing	MRPTFE
3	Stem bearing	RPTFE
4	Ball	B16, chrome plated
5	Seat (2)	RPTFE
6	Retainer	B16 (1/4" to 1-1/2") B584-C84400 (2")
7	Gland nut	B16
8	Stem	B16
9	Lever nut	Steel, zinc plated
10	Body seal (1-1/4" to 2")	PTFE
11	Body	B584-C84400
12	Tailpiece	B16 or B584-C84400
13	Union nut	B16 or B584-C84400
14	Union seal	Fluorocarbon

DIMENSIONS

PART NO.	SIZE	A	B	C	D	E	WT.
70-301-01	1/4"	0.37	1.90	2.93	1.75	3.87	0.86
70-302-01	3/8"	0.37	1.90	2.93	1.75	3.87	0.84
70-303-01	1/2"	0.50	2.00	3.09	1.75	3.87	0.99
70-304-01	3/4"	0.68	2.46	3.96	2.12	4.87	1.91
70-305-01	1"	0.87	2.78	4.46	2.25	4.87	2.42
70-306-01	1-1/4"	1.00	2.68	4.68	2.62	5.50	4.27
70-307-01	1-1/2"	1.25	2.87	5.06	3.05	8.00	5.82
70-308-01	2"	1.50	3.25	5.59	3.24	8.00	8.55

VARIATIONS AVAILABLE

- 70-340 Series (316 SS Ball & Stem)

OPTIONS AVAILABLE

(MORE INFORMATION IN SECTION J)

- Minimum quantities apply
- To specify an option, replace the "01" standard suffix with the suffix of the option.
- To specify multiple options, replace the "01" suffix with the desired suffixes in the numerical order shown below. NOTE: Not all suffixes can be combined together.

(SUFFIX)	OPTION	SIZES
-01	Standard Configuration	All
-02-	Stem Grounded	1/4" to 2"
-04-	2-1/4" CS Stem Extension	1/4" to 2"
-05-	Plain Ball	1/4" to 2"
-07-	Steel Tee Handle	1/4" to 2"
-08-	90º Reversed Stem	1/4" to 2"
-10-	SS Lever & Nut	1/4" to 2"
-14-	Side Vented Ball (Uni-Directional)	1/4" to 2"
-15-	Wheel Handle, Steel	1/4" to 2"
-16-	Chain Lever - Vertical	3/4" to 2"
-17-	Rough Chrome Plated - Bronze Valves	1/4" to 2"
-18-	Plain Yellow Grip	1/4" to 2"
-20-	Slot Vented Ball (Bi-Directional) - Bronze Valves	1/4" to 2"
-21-	UHMWPE Seats (Non-PTFE)	1/4" to 2"
-24-	Graphite Packing	1/4" to 2"
-27-	SS Latch-Lock Lever & Nut	1/4" to 2"
-30-	Cam-Lock and Grounded	1/4" to 2"
-32-	SS Tee Handle & Nut	1/4" to 2"
-35-	PTFE Trim	1/4" to 2"
-45-	Less Lever & Nut	1/4" to 2"
-46-	Latch-Lock Lever - Lock in Closed Position Only	1/4" to 2"
-48-	SS Oval Handle (No Latch) & Nut	1/4" to 2"
-49-	Assembled Dry	1/4" to 2"
-50-	2-1/4" CS Locking Stem Extension	1/4" to 2"
-56-	Multifill Seats & Packing	1/4" to 2"
-57-	Oxygen Cleaned	1/4" to 2"
-58-	Chain Lever - Horizontal	3/4" to 2"
-60-	Grounded Ball & Stem	1/4" to 2"
-63-	NPT x Solder/Socket Weld	3/8" to 2"
-92-	Balancing Stop	1/4" to 2"
-94-	2-1/4" CS Stem Extension and Balancing Stop	1/4" to 2"

Pressure/Temperature Ratings - Page M-10, Graph No. 4

70-400 SERIES

SINGLE UNION END SOLDER BALL VALVES

Solder Ends, Single Union End, 600 CWP (psig), Cold Non-Shock.
150 psig Saturated Steam.
Vacuum Service to 29 inches Hg.
MSS SP-110 Compliant.

FEATURES

- Reinforced seats
- Fluorocarbon O-Ring sealed single union requires only light torque to seal
- Blowout-proof stem design
- Adjustable packing gland

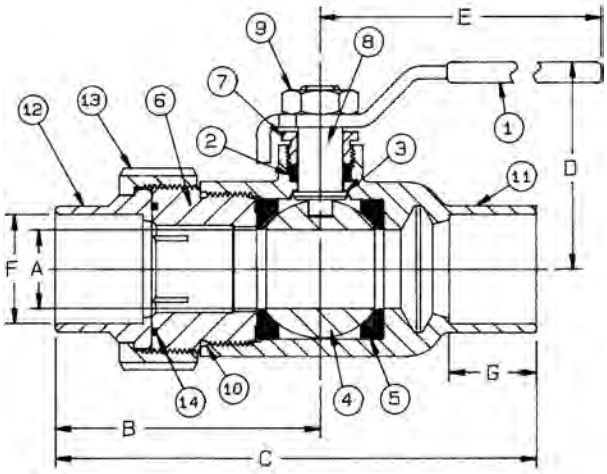

STANDARD MATERIAL LIST

	PART	MATERIAL
1	Lever and grip	Steel, zinc plated w/vinyl
2	Stem packing	MPTFE
3	Stem bearing	RPTFE
4	Ball	B16, chrome plated
5	Seat (2)	RPTFE
6	Retainer	B16 or B584-C84400
7	Gland nut	B16
8	Stem	B16
9	Lever nut	Steel, zinc plated
10	Body seal (1-1/4" to 2")	PTFE
11	Body	B584-C84400
12	Tailpiece	B16 or B584-C84400
13	Union nut	B16 or B584-C84400
14	Union seal	Fluorocarbon

The 70-400 is designed to be soft soldered into lines without disassembly. This allows a tested valve to be installed without disturbing the seats and seals in any way. Soldering temperature not to exceed 500ºF.

VARIATIONS AVAILABLE

- 70-440 Series (316 SS Ball & Stem)

OPTIONS AVAILABLE

(MORE INFORMATION IN SECTION J)

- Minimum quantities apply
- To specify an option, replace the "01" standard suffix with the suffix of the option.
- To specify multiple options, replace the "01" suffix with the desired suffixes in the numerical order shown below. NOTE: Not all suffixes can be combined together.

(SUFFIX)	OPTION	SIZES
-01	Standard Configuration	All
-02-	Stem Grounded	3/8" to 2"
-04-	2-1/4" CS Stem Extension	3/8" to 2"
-05-	Plain Ball	3/8" to 2"
-07-	Steel Tee Handle	3/8" to 2"
-08-	90º Reversed Stem	3/8" to 2"
-10-	SS Lever & Nut	3/8" to 2"
-14-	Side Vented Ball (Uni-Directional)	3/8" to 2"
-15-	Wheel Handle, Steel	3/8" to 2"
-16-	Chain Lever - Vertical	3/4" to 2"
-17-	Rough Chrome Plated - Bronze Valves	3/8" to 2"
-18-	Plain Yellow Grip	3/8" to 2"
-20-	Slot Vented Ball (Bi-Directional) - Bronze Valves	3/8" to 2"
-21-	UHMWPE Seats (Non-PTFE)	3/8" to 2"
-24-	Graphite Packing	3/8" to 2"
-27-	SS Latch-Lock Lever & Nut	3/8" to 2"
-30-	Cam-Lock and Grounded	3/8" to 2"
-32-	SS Tee Handle & Nut	3/8" to 2"
-35-	PTFE Trim	3/8" to 2"
-45-	Less Lever & Nut	3/8" to 2"
-46-	Latch-Lock Lever - Lock in Closed Position Only	3/8" to 2"
-48-	SS Oval Handle (No Latch) & Nut	3/8" to 2"
-49-	Assembled Dry	3/8" to 2"
-50-	2-1/4" CS Locking Stem Extension	3/8" to 2"
-56-	Multifill Seats & Packing	3/8" to 2"
-57-	Oxygen Cleaned	3/8" to 2"
-58-	Chain Lever - Horizontal	3/4" to 2"
-60-	Grounded Ball & Stem	3/8" to 2"
-63-	NPT x Solder/Socket Weld	3/8" to 2"
-92-	Balancing Stop	3/8" to 2"
-94-	2-1/4" CS Stem Extension and Balancing Stop	3/8" to 2"

Pressure/Temperature Ratings - Page M-10, Graph No. 4

DIMENSIONS

PART NO.	SIZE	A	B	C	D	E	F	G	WT.
70-402-01	3/8"	0.37	1.81	3.09	1.75	3.87	0.503	0.37	0.85
70-403-01	1/2"	0.50	2.00	3.43	1.75	3.87	0.628	0.50	1.02
70-404-01	3/4"	0.68	2.62	4.56	2.06	4.78	0.878	0.75	1.93
70-405-01	1"	0.87	2.81	5.06	2.25	4.78	1.129	0.90	2.42
70-406-01	1-1/4"	1.00	2.87	5.18	2.62	5.50	1.378	0.96	4.11
70-407-01	1-1/2"	1.25	2.92	5.53	3.10	8.00	1.629	1.09	5.44
70-408-01	2"	1.50	3.50	6.75	3.24	8.00	2.129	1.34	7.77

73-300 SERIES

DOUBLE UNION END CARBON STEEL BALL VALVE

Threaded, 3000 CWP (psig), Cold Non-Shock.
150 psig Saturated Steam.
Vacuum Service to 29 inches Hg.
MSS SP-110 Compliant.

FEATURES

- Heavy duty quarter turn lever
- Reinforced seats and seals
- Steel barstock design
- Easy installation and maintenance
- Blowout-proof stem design
- Adjustable packing gland
- Zinc phosphate corrosion protection

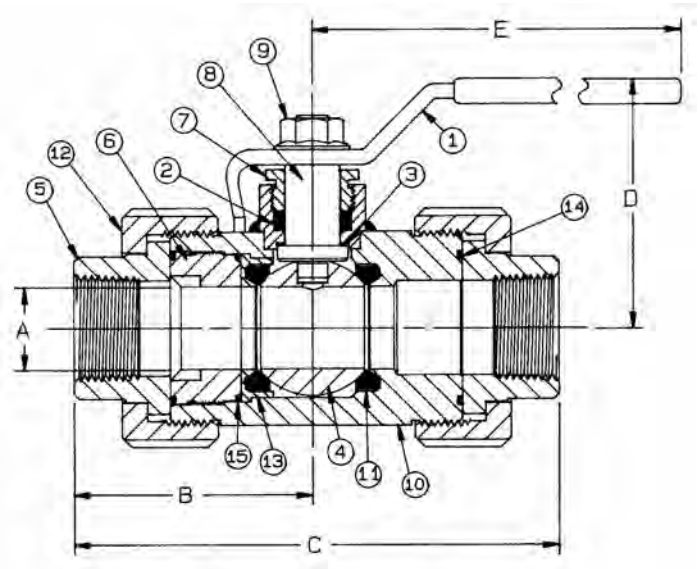

VARIATIONS AVAILABLE

- 73-340 Series(316 SS Ball & Stem)

UL LISTINGS @ 250 PSIG MAX.

- Guide YRPV: Gas shutoff valve for use with natural and manufactured gases.
- Guide YSDT: LP gas shutoff valve.
- Guide YRBX: Flammable liquid shutoff valve.

Note: Listings apply ONLY to the standard -01 valves.

OPTIONS AVAILABLE

(MORE INFORMATION IN SECTION J)

- Minimum quantities apply
- To specify an option, replace the "01" standard suffix with the suffix of the option.
- To specify multiple options, replace the "01" suffix with the desired suffixes in the numerical order shown below. NOTE: Not all suffixes can be combined together.

(SUFFIX)	OPTION	SIZES
-01	Standard Configuration	All
-P -01	BSPP (Parallel) Thread Connection	1/4" to 2"
-T -01	BSPT (Tapered) Thread Connection	1/4" to 2"
-02-	Stem Grounded	1/4" to 2"
-07-	Steel Tee Handle	1/4" to 1-1/2"
-14-	Side Vented Ball (Uni-Directional)	1/4" to 2"
-15-	Wheel Handle, Steel	1/4" to 1"
-18-	Plain Yellow Grip	1/4" to 2"
-19-	Lock Plate	1/4" to 2"
-21-	UHMWPE Seats (Non-PTFE)	1/4" to 2"
-22-	Viton Union Seals	1/4" to 2"
-29-	Graphite Packing & Seals	1/4" to 2"
-45-	Less Lever & Nut	1/4" to 2"
-60-	Grounded Ball & Stem	1/4" to 2"
-63-	Threaded x Socket Weld	1/2" to 2"
-64-	250# Steam Trim	1/4" to 2"

Pressure/Temperature Ratings - Page M-15, Graph No. 15

DIMENSIONS

PART NO.	SIZE	A	B	C	D	E	WT.
73-301-01	1/4"	0.43	2.50	5.00	2.50	5.62	3.51
73-302-01	3/8"	0.57	2.50	5.00	2.50	5.62	3.45
73-303-01	1/2"	0.62	2.50	5.00	2.50	5.62	3.35
73-304-01	3/4"	0.81	2.71	5.31	2.62	5.62	4.48
73-305-01	1"	1.00	2.96	6.06	3.12	6.62	7.04
73-306-01	1-1/4"	1.25	2.87	6.12	3.43	8.00	9.96
73-307-01	1-1/2"	1.50	3.46	7.12	3.56	8.00	14.83
73-308-01	2"	1.75	3.75	7.50	4.18	9.00	20.50

STANDARD MATERIAL LIST

	PART	MATERIAL
1	Lever and grip	Steel, zinc plated w/vinyl
2	Stem packing	RPTFE
3	Stem bearing	RPTFE
4	Ball	ASTM A276, Type 316 Stainless Steel
5	Tailpiece (2)	A108-CS
6	Retainer	A108-CS
7	Gland nut	A108-CS
8	Stem	ASTM A108, CS, zinc phosphate finish or ASTM A276, Type 316 Stainless Steel
9	Lever nut	Steel, zinc plated
10	Body	A108-CS
11	Seat (2)	RPTFE
12	Union nut (2)	A108-CS
13	Seat holder	A108-CS
14	Union seal (2)	RPTFE
15	Retainer seal	RPTFE

73-400 SERIES

DOUBLE UNION END CARBON STEEL SOCKET WELD BALL VALVE

Socket Weld End, 3000 CWP (psig), Cold Non-Shock.
150 psig Saturated Steam.
Vacuum Service to 29 inches Hg.
MSS SP-110 Compliant.

FEATURES

- Heavy duty quarter turn lever
- Reinforced seats and seals
- Steel barstock design
- Easy installation and maintenance
- Blow-out-proof stem design
- Adjustable packing gland
- Zinc phosphate corrosion protection

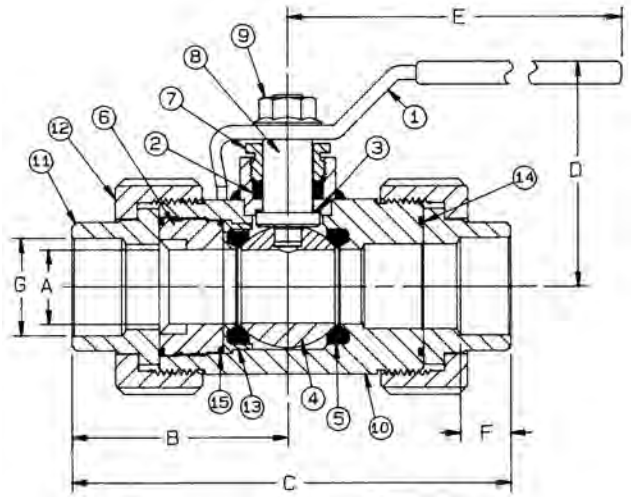

STANDARD MATERIAL LIST

	PART	MATERIAL
1	Lever and grip	Steel, zinc plated w/vinyl
2	Stem packing	RPTFE
3	Stem bearing	RPTFE
4	Ball	ASTM A276, Type 316 Stainless Steel
5	Seat (2)	RPTFE
6	Retainer	A108-CS
7	Gland nut	A108-CS
8	Stem	ASTM A108, CS, zinc phosphate finish or ASTM A276, Type 316 Stainless Steel
9	Lever nut	Steel, zinc plated
10	Body	A108-CS
11	Tail piece (2)	A108-1018
12	Union nut (2)	A108-CS
13	Seat holder	A108-CS
14	Union seal (2)	RPTFE
15	Retainer seal	RPTFE

DIMENSIONS

PART NO.	SIZE	A	B	C	D	E	F	G	WT.
73-403-01	1/2"	0.62	2.50	5.00	2.50	5.62	0.43	0.855	3.35
73-404-01	3/4"	0.81	2.71	5.31	2.62	5.62	0.56	1.065	4.48
73-405-01	1"	1.00	2.93	6.06	3.12	6.62	0.68	1.330	7.04
73-406-01	1-1/4"	1.25	2.87	6.12	3.43	8.00	0.81	1.675	9.96
73-407-01	1-1/2"	1.50	3.46	7.12	3.56	8.00	0.81	1.915	14.83
73-408-01	2"	1.75	3.75	7.50	4.18	9.00	1.06	2.406	20.50

VARIATIONS AVAILABLE

- 73-440 Series (316 SS Ball & Stem)

UL LISTINGS @ 250 PSIG MAX.

- Guide YRPV: Gas shutoff valve for use with natural and manufactured gases.
- Guide YSDT: LP gas shutoff valve.
- Guide YRBX: Flammable liquid shutoff valve.

Note: Listings apply ONLY to the standard -01 valves.

OPTIONS AVAILABLE

(MORE INFORMATION IN SECTION J)

- Minimum quantities apply
- To specify an option, replace the "01" standard suffix with the suffix of the option.
- To specify multiple options, replace the "01" suffix with the desired suffixes in the numerical order shown below. NOTE: Not all suffixes can be combined together

(SUFFIX)	OPTION	SIZES
-01	Standard Configuration	All
-02-	Stem Grounded	1/2" to 2"
-07-	Steel Tee Handle	1/2" to 1-1/2"
-08-	90º Reversed Stem	1/2" to 2"
-14-	Side Vented Ball (Uni-Directional)	1/2" to 2"
-15-	Wheel Handle, Steel	1/2" to 1"
-18-	Plain Yellow Grip	1/2" to 2"
-19-	Lock Plate	1/2" to 2"
-21-	UHMWPE Trim (non-PTFE)	1/2" to 2"
-22-	Viton Union Seals	1/2" to 2"
-29-	Graphite Packing & Seals	1/2" to 2"
-45-	Less Lever & Nut	1/2" to 2"
-60-	Grounded Ball & Stem	1/2" to 2"
-64-	250# Steam Trim	1/2" to 2"

Pressure/Temperature Ratings - Page M-15, Graph No. 15

76-300 SERIES

DOUBLE UNION END STAINLESS STEEL BALL VALVE

5 YEAR WARRANTY MADE IN USA

Threaded, 1/2" to 1" 2000 CWP (psig), 1-1/4" to 2" 1500 CWP (psig). Cold Non-Shock.
150 psig Saturated Steam.
Vacuum Service to 29 inches Hg.
MSS SP-110 Compliant.

FEATURES

- Heavy duty quarter turn handles
- Reinforced seats and seals
- Blowout-proof stem design
- Adjustable packing gland

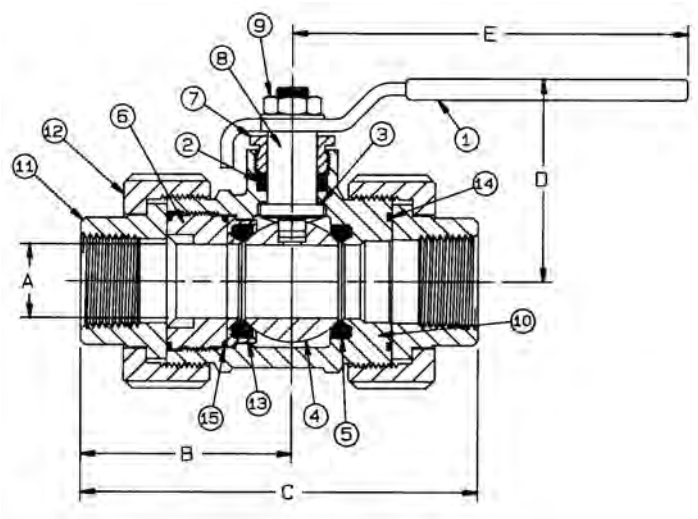

STANDARD MATERIAL LIST

	PART	MATERIAL
1	Lever and grip	304 SS w/vinyl
2	Stem packing	MPTFE
3	Stem bearing	RPTFE
4	Ball	A276-316
5	Seat (2)	RPTFE
6	Retainer	A276-316
7	Gland nut	A276-316
8	Stem	A276-316
9	Lever nut	18-8 SS
10	Body	A351-CF8M
11	Tailpiece (2)	A276-316
12	Union nut (2)	A108-CS
13	Seat holder	A276-316
14	Union seal (2)	RPTFE
15	Retainer seal	RPTFE

DIMENSIONS

PART NO.	SIZE	A	B	C	D	E	WT.
76-303-01	1/2"	0.62	2.27	4.33	2.12	4.87	2.88
76-304-01	3/4"	0.81	2.46	4.51	2.31	4.87	3.81
76-305-01	1"	1.00	2.89	5.45	2.75	5.50	5.98
76-306-01	1-1/4"	1.25	2.88	5.32	2.97	5.50	8.47
76-307-01	1-1/2"	1.50	3.43	6.43	3.39	7.87	12.61
76-308-01	2"	1.75	3.75	6.87	4.12	9.87	16.88

OPTIONS AVAILABLE

(MORE INFORMATION IN SECTION J)

- Minimum quantities apply
- To specify an option, replace the "01" standard suffix with the suffix of the option.
- **To specify multiple options, replace the "01" suffix with the desired suffixes in the numerical order shown below. NOTE: Not all suffixes can be combined together**

(SUFFIX)	OPTION	SIZES
-01	Standard Configuration	All
-P -01-	BSPP (Parallel) Thread Connection	1/2" to 2"
-T -01-	BSPT (Tapered) Thread Connection	1/2" to 2"
-02-	Stem Grounded	1/2" to 2"
-04-	2-1/4" CS Stem Extension	1/2" to 1-1/2"
-07-	Steel Tee Handle	1/2" to 1-1/2"
-08-	90º Reversed Stem	1/2" to 2"
-14-	Side Vented Ball (Uni-Directional)	1/2" to 2"
-15-	Wheel Handle, Steel	1/2" to 1-1/2"
-18-	Plain Yellow Grip	1/2" to 2"
-22-	Viton Union Seals	1/2" to 2"
-27-	SS Latch-Lock Lever & Nut	1/2" to 1-1/2"
-29-	Graphite Packing & Seals	1/2" to 2"
-32-	SS Tee Handle & Nut	1/2" to 1-1/2"
-45-	Less Lever & Nut	1/2" to 2"
-46-	Latch-Lock Lever - Lock in Closed Position Only	1/2" to 1-1/2"
-49-	Assembled Dry	1/2" to 2"
-57-	Oxygen Cleaned	1/2" to 2"
-60-	Grounded Ball & Stem	1/2" to 2"
-63-	Threaded Socket Weld	1/2" to 2"
-64-	250# Steam Trim	1/2" to 2"

Pressure/Temperature Ratings-
Page M-14, Graph No. 14 (1/2" to 1")
Page M-13, Graph No.12 (1-1/4" to 2")

76-400 SERIES

DOUBLE UNION END STAINLESS STEEL SOCKET WELD BALL VALVE

Socket Weld, 1/2" to 1" 2000 CWP (psig), 1-1/4" to 2" 1500 CWP (psig). Cold Non-Shock.
150 psig Saturated Steam, Vacuum Service to 29 inches Hg.
MSS SP-110 Compliant.

FEATURES

- Heavy duty quarter turn handles
- Reinforced seats and seals
- Blowout-proof stem design
- Adjustable packing gland

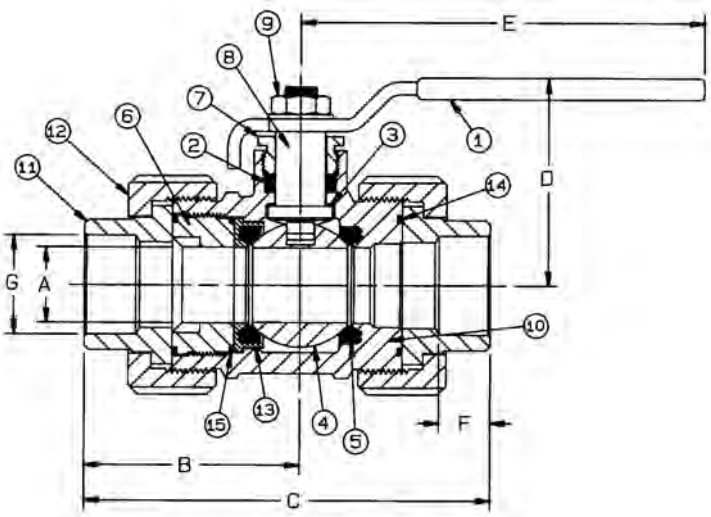

STANDARD MATERIAL LIST

	PART	MATERIAL
1	Lever and grip	304 SS w/vinyl
2	Stem packing	MPTFE
3	Stem bearing	RPTFE
4	Ball	A276-316
5	Seat (2)	RPTFE
6	Retainer	A276-316
7	Gland nut	A276-316
8	Stem	A276-316
9	Lever nut	18-8 SS
10	Body	A351-CF8M
11	Tailpiece (2)	A276-316
12	Union nut (2)	A108-CS
13	Seat holder	A276-316
14	Union seal (2)	RPTFE
15	Retainer seal	RPTFE

OPTIONS AVAILABLE

(MORE INFORMATION IN SECTION J)

- Minimum quantities apply
- To specify an option, replace the "01" standard suffix with the suffix of the option.
- To specify multiple options, replace the "01" suffix with the desired suffixes in the numerical order shown below. NOTE: Not all suffixes can be combined together

(SUFFIX)	OPTION	SIZES
-01	Standard Configuration	All
-02-	Stem Grounded	1/2" to 2"
-04-	2-1/4" CS Stem Extension	1/2" to 1-1/2"
-07-	Steel Tee Handle	1/2" to 1-1/2"
-08-	90º Reversed Stem	1/2" to 2"
-14-	Side Vented Ball (Uni-Directional)	1/2" to 2"
-15-	Wheel Handle, Steel	1/2" to 1-1/2"
-18-	Plain Yellow Grip	1/2" to 2"
-22-	Viton Union Seals	1/2" to 2"
-27-	SS Latch-Lock Lever & Nut	1/2" to 1-1/2"
-29-	Graphite Packing & Seals	1/2" to 2"
-32-	SS Tee Handle & Nut	1/2" to 2"
-45-	Less Lever & Nut	1/2" to 2"
-46-	Latch-Lock Lever - Lock in Closed Position Only	1/2" to 1-1/2"
-49-	Assembled Dry	1/2" to 2"
-57-	Oxygen Cleaned	1/2" to 2"
-60-	Grounded Ball & Stem	1/2" to 2"
-64-	250# Steam Trim	1/2" to 2"

Pressure/Temperature Ratings -
Page M-14, Graph No. 14 (1/2" to 1")
Page M-13, Graph No. 12 (1-1/4" to 2")

DIMENSIONS

PART NO.	SIZE	A	B	C	D	E	F	G	WT.
76-403-01	1/2"	0.62	2.27	4.33	2.12	4.87	0.43	0.855	2.88
76-404-01	3/4"	0.81	2.46	4.51	2.31	4.87	0.56	1.065	3.81
76-405-01	1"	1.00	2.89	5.45	2.75	5.50	0.68	1.330	5.98
76-406-01	1-1/4"	1.25	2.88	5.32	2.97	5.50	0.81	1.675	8.47
76-407-01	1-1/2"	1.50	3.43	6.43	3.39	7.87	0.87	1.915	12.61
76-408-01	2"	1.75	3.75	6.87	4.12	9.87	1.06	2.406	16.88

"Apollo" Valves | INDUSTRIAL PRODUCTS

Steam Prep Ball Valves

section G

SECTION G

STEAM PREP BALL VALVES

FEATURES

- These valves are recommended for saturated steam to 250 psig
- 316 SS ball and stem
- Multifill seats
- Multifill stuffing box ring
- Valves with "-64" suffix include yellow vinyl grip with distinctive red lettering

SERIES	DESCRIPTION	PAGE
BRONZE		
70-140-64 SERIES	Threaded Bronze	A-3
70B-140 SERIES	Threaded ASME B31.1 Power Piping Bronze Ball Valve	A-5
71-140-64 SERIES	Threaded Bronze with Mounting Pad	A-9
CARBON STEEL		
72-140-64A SERIES	Threaded High Pressure Carbon Steel	A-11
73A-140-64 SERIES	Threaded A105 Carbon Steel	A-13
73-340-64 SERIES	Threaded Double Union End Carbon Steel	F-5
73-440-64 SERIES	Socket Weld Double Union End Carbon Steel	F-6
89-140-64 SERIES	Threaded Carbon Steel with Mounting Pad	A-35
STAINLESS STEEL		
76-100-64 SERIES	Threaded Stainless Steel with Mounting Pad	A-14-16
76-300-64 SERIES	Threaded Double Union End Stainless Steel	F-7
76-400-64 SERIES	Socket Weld Double Union End Stainless Steel	F-8

"Apollo" Valves | INDUSTRIAL PRODUCTS

Specialty Ball Valves

section H

SECTION H

SPECIALTY BALL VALVES

SERIES	DESCRIPTION	PAGE
BRONZE		
7K-100 SERIES	Threaded Full Port Bronze with Drain	H-5
71-500 SERIES	Threaded Bronze Spring Return Handle	H-6
75-100 SERIES	Threaded Bronze Pad Locking Valve	H-8
7K-100-SV SERIES	Threaded Full Port Bronze with Safety Vent (W/Threaded Port)	H-10
77-100-SV SERIES	Threaded Bronze Full Port with Safety Vent	H-11
78-124 & 78-125	Threaded Bronze 5-Port Fuel Selector	H-12
78-248, 250, 256, 438	Threaded Bronze Surface Mount	H-13
78-257 THRU 78-267	M x F Threaded Brass and Bronze Instrumentation	H-14
78-621 THRU 78-625	Threaded Bronze Irrigation	H-15
CARBON STEEL		
7A-130-26 SERIES	Threaded Dry Chlorine Carbon Steel with Ni-Cu Ball & Stem	H-3
89-500 SERIES	Threaded Carbon Steel Spring Return Handle	H-16
STAINLESS STEEL		
7H-800 SERIES	M x F Threaded Full Port Stainless Steel	H-4
76-500 SERIES	Threaded Stainless Steel Spring Return Handle	H-9
NICKEL		
74-100 SERIES	Threaded Chemical Resistant Nickel	H-7
UL LISTED CARBON STEEL		
73-300 SERIES	Carbon Steel Double Union End Ball Valve	H-17
73-400 SERIES	Socket Weld Carbon Steel, Double Union End	H-18
489-100 SERIES	Threaded Cast Carbon Steel	H-19
87A/88A SERIES	ASME 150 & 300 Flanged	D-4

7A-130-26 SERIES

CARBON STEEL DRY CHLORINE BALL VALVE W/ NI-CU BALL & STEM

5 YEAR WARRANTY MADE IN USA

Female NPT Thread. 400 CWP (psig), Cold Non-Shock.
For Use With Dry Chlorine Gas and Dry Liquid.
Complies With Recommendations of Chlorine Institute Pamphlet No. 6.
MSS SP-110 Compliant.

FEATURES

- Chevron style stem packing
- Ni-Cu ball and stem
- Investment cast parts
- Zinc phosphate corrosion protection
- Blowout-proof stem design
- Bolted, adjustable packing gland
- Vented ball

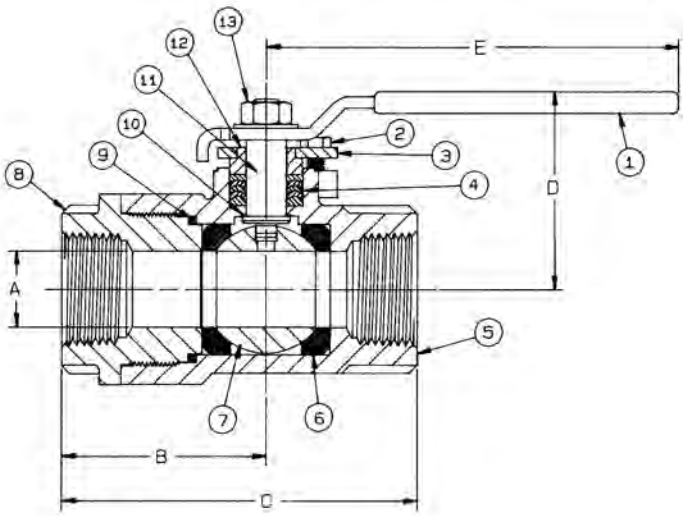

STANDARD MATERIAL LIST

	PART	MATERIAL
1	Lever and grip	304 SS w/vinyl
2	Bolt (2)	Zinc Plated Steel
3	Gland plate	304 SS
4	Packing set	PTFE, Chevron style
5	Body	A216-WCB
6	Seats (2)	RPTFE
7	Ball	B164
8	Retainer	A216-WCB
9	Body seal	RPTFE
10	Stem bearing	RPTFE
11	Stem	B164
12	Packing gland	A276-316
13	Lever nut	18-8 SS

Pressure/Temperature Ratings - Page M-16, Graph No. 17

DIMENSIONS

PART NO.	SIZE	A	B	C	D	E	WT.
7A-131-26	1/4"	0.43	1.56	2.75	1.93	3.87	1.25
7A-132-26	3/8"	0.50	1.56	2.75	1.93	3.87	1.21
7A-133-26	1/2"	0.50	1.56	2.75	1.93	3.87	1.14
7A-134-26	3/4"	0.68	2.00	3.50	2.31	4.87	2.11
7A-135-26	1"	0.87	2.37	4.12	2.43	4.87	2.94
7A-136-26	1-1/4"	1.00	2.24	4.24	3.00	5.50	4.40
7A-137-26	1-1/2"	1.25	2.65	5.13	3.38	8.00	7.04
7A-138-26	2"	1.50	3.25	6.00	3.67	8.00	10.86

7H-800 SERIES

M x F STAINLESS STEEL FULL PORT HYDRO BALL VALVE

Male x Female NPT Thread, 800 CWP (psig), Cold Non-Shock.
125 psig Saturated Steam.
Vacuum Service to 29 inches Hg.
MSS SP-110 Compliant.

FEATURES

- 316 SS ball & stem
- MPTFE packing
- PTFE seats
- Blowout-proof stem design
- Adjustable packing gland
- Threaded drain port

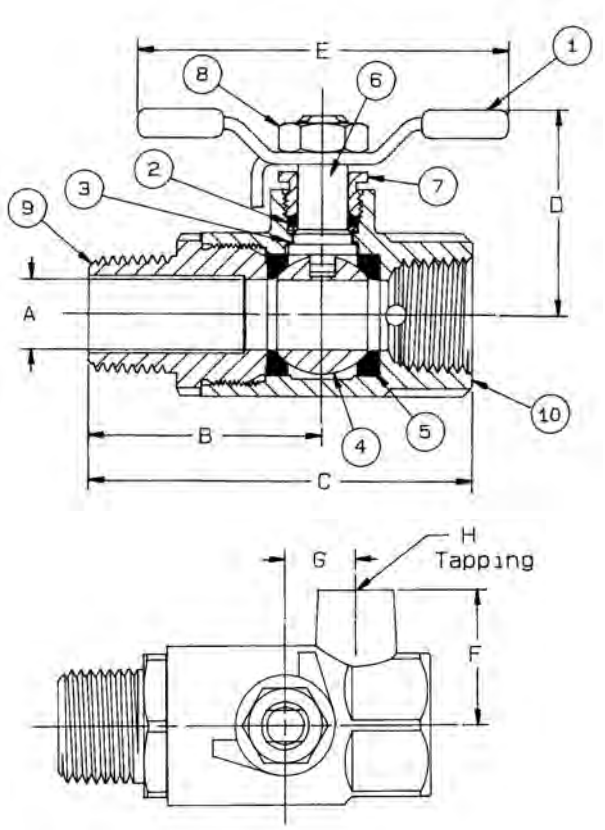

OPTIONS AVAILABLE

(MORE INFORMATION IN SECTION J)

- Minimum quantities apply
- To specify an option, replace the "01" standard suffix with the suffix of the option.
- To specify multiple options, replace the "01" suffix with the desired suffixes in the numerical order shown below. NOTE: Not all suffixes can be combined together.

(SUFFIX)	OPTION	SIZES
-01	Standard Configuration	All
-31-	7H Series w/Boss NOT Drilled & Tapped	1/4" to 1"

Pressure/Temperature Ratings - Page M-18, Graph No. 21

STANDARD MATERIAL LIST

	PART	MATERIAL
1	T-handle & grip	SS
2	Stem packing	MPTFE
3	Stem bearing	RPTFE
4	Ball	A276-316
5	Seat (2)	PTFE
6	Stem	A276-316
7	Gland screw	A276-316
8	Lever nut	304 SS
9	Retainer	A276-316
10	Body	A351-CF8M

DIMENSIONS

PART NO.	SIZE	A	B	C	D	E	F	G	H	WT.
7H-801-01	1/4"	0.37	1.47	2.46	1.39	2.56	0.93	0.53	1/8 NPT	0.65
7H-802-01	3/8"	0.37	1.55	2.54	1.39	2.56	0.93	0.53	1/8 NPT	0.62
7H-803-01	1/2"	0.50	1.79	2.83	1.45	2.56	1.00	0.53	1/8 NPT	0.73
7H-804-01	3/4"	0.75	2.01	3.42	2.08	3.25	1.01	0.75	1/8 NPT	0.86
7H-805-01	1"	1.00	2.39	4.17	2.38	3.93	1.12	0.94	1/8 NPT	1.65

7K-100 SERIES

BRONZE FULL PORT BALL VALVE W/ SAFETY VENT

Female NPT Thread with Female NPT threaded drain port.
Recommended for water or air services.
Rated +50°F to 200°F, 0-125 psig.

FEATURES

- Adjustable packing
- Blowout-proof stem design
- RPTFE seats and stuffing box ring
- Chromium plated ball
- Mounting pad for easy actuator mounting

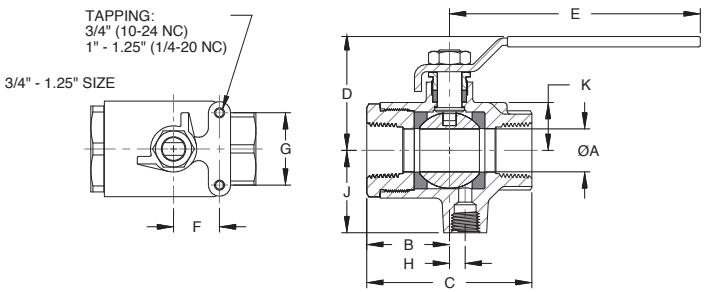

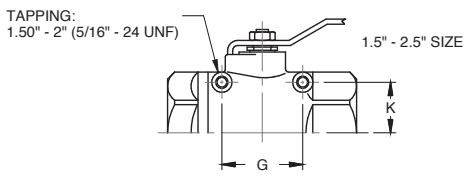

OPTIONS AVAILABLE

(MORE INFORMATION IN SECTION J)

- Minimum quantities apply
- To specify an option, replace the "01" standard suffix with the suffix of the option.
- To specify multiple options, replace the "01" suffix with the desired suffixes in the numerical order shown below. NOTE: Not all suffixes can be combined together.

(SUFFIX)	OPTION	SIZES
-01	Standard Configuration	All
-02-	Stem Grounded	1/4" to 2-1/2"
-04-	2-1/4" Stem Extension (Carbon Steel, Zinc Plated)	1/4" to 2-1/2"
-07-	Steel Tee Handle	1/4" to 1-1/4"
-08-	90° Reversed Stem	1/4" to 2-1/2"
-10-	SS Lever & Nut	1/4" to 2-1/2"
-15-	Wheel Handle, Steel	1/4" to 1-1/4"
-16-	Chain Lever, Vertical	3/4" to 2-1/2"
-17-	Rough Chrome Plated	1/4" to 2-1/2"
-18-	Plain Yellow Grip	1/4" to 2-1/2"
-24-	Graphite Packing	1/4" to 2-1/2"
-27-	SS Latch-Lock Lever & Nut	1/4" to 2-1/2"
-30-	Cam-Lock & Grounded	1/4" to 1-1/4"
-32-	SS Tee Handle & Nut	1/4" to 1-1/4"
-35-	PTFE Trim	3/4" to 2"
-40-	Cyl-Loc & Grounded	1/4" to 1-1/4"
-45-	Less Lever and Nut	1/4" to 2-1/2"
-46-	Latch Lock Lever -Closed Position	1/4" to 2-1/2"
-47-	SS Oval latch-Lock Handle & Nut	1/4" to 3/4"
-48-	SS Oval Handle (No Latch) & Nut	1/4" to 2"
-49-	No Lubrication. Assembled Dry.	1/4" to 2-1/2"
-50-	2-1/4" CS Locking Stem Extension	1/4" to 2-1/2"
-56-	MPTFE Seats and Packing	1/4" to 2-1/2"
-57-	Oxygen Cleaned	1/4" to 2-1/2"
-58-	Chain Lever - Horizontal	3/4" to 2-1/2"
-60-	Grounded Ball & Stem	1/4" to 2-1/2"
-63-	NPT x Solder/Socketweld	1/4" to 2-1/2"
-92-	Balancing Stop	1/4" to 2-1/2"
-94-	2-1/4" CS Stem Extension & Balancing Stop	1/4" to 2-1/2"

NOTE:
Also consider the 7K with "SV" suffix. The 7K with "SV" suffix has spring washers that keep the upstream seat in contact with the ball.

STANDARD MATERIAL LIST

PART	MATERIAL
LEVER AND GRIP	Steel, zinc plated w/vinyl
STEM PACKING	RPTFE
STEM BEARING	RPTFE
BALL	B16 Brass, chrome plated
SEAT (2)	RPTFE
RETAINER	B16 Brass (1/4" to 1") B584-C84400 (1-1/4" to 2-1/2")
GLAND NUT	B16 Brass
STEM	B16 Brass
LEVER NUT	Steel, zinc plated
BODY	B584-C84400

DIMENSIONS

PART NO.	SIZE	A	B	C	D	E	F	G	H	J	K	WT.
7K-101-01	1/4"	0.43	1.12	2.25	1.81	3.87	-	-	0.093	1.18	-	0.70
7K-102-01	3/8"	0.50	1.12	2.25	1.81	3.87	-	-	0.093	1.18	-	0.66
7K-103-01	1/2"	0.50	1.12	2.25	1.81	3.87	-	-	0.125	1.25	-	0.73
7K-104-01	3/4"	0.81	1.56	3.12	2.12	4.87	0.87	1.37	0.296	1.56	0.901	1.93
7K-105-01	1"	1.00	1.81	3.62	2.62	5.50	0.93	1.50	0.310	1.78	1.121	3.42
7K-106-01	1-1/4"	1.25	2.12	4.25	2.87	5.50	0.93	1.50	0.370	2.03	1.371	5.15
7K-107-01	1-1/2"	1.50	2.37	4.75	3.34	8.00	-	2.08	0.500	2.21	1.282	6.81
7K-108-01	2"	2.00	2.65	5.37	3.71	8.00	-	2.41	0.625	2.68	1.562	11.85
7K-109-01	2-1/2"	2.50	3.25	6.50	4.12	8.00	-	2.75	1.090	3.00	2.002	17.35

1 To Top of Mounting Pad
2 To Centerline of Mounting Pad

REV. 04APR16

71-500 SERIES

BRONZE BALL VALVE W/ SPRING RETURN HANDLE

5 YEAR WARRANTY MADE IN USA

Female NPT Thread, 600 CWP (psig), Cold Non-Shock.
150 psig Saturated Steam.
Vacuum Service to 29 inches Hg.
MSS SP-110 Compliant.

FEATURES

- Spring return to close (-01)
- Spring return to open (-08)
- All components of lever are SS
- Operating torque is approximately three times standard valve torque
- Reinforced seats
- Blowout-proof stem design
- Adjustable packing gland
- Chromium plated ball

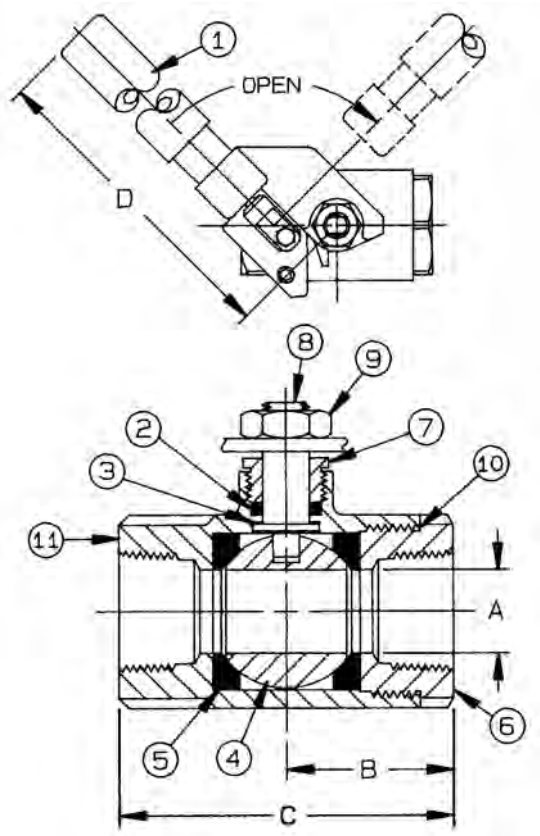

DIMENSIONS

PART NO.	SIZE	A	B	C	D	WT.
71-501-01	1/4"	0.43	1.12	2.25	7.00	1.47
71-502-01	3/8"	0.50	1.12	2.25	7.00	1.45
71-503-01	1/2"	0.50	1.12	2.25	7.00	1.35
71-504-01	3/4"	0.68	1.50	3.00	7.00	2.33
71-505-01	1"	0.87	1.68	3.37	7.00	2.59
71-506-01	1-1/4"	1.00	2.00	4.00	9.00	4.18
71-507-01	1-1/2"	1.25	2.18	4.37	9.00	5.31
71-508-01	2"	1.50	2.34	4.68	9.00	6.41

VARIATIONS AVAILABLE

- 71-540 Series (316 SS Ball & Stem)
- 71-590 Series (Pinned Retainer)

OPTIONS AVAILABLE

(MORE INFORMATION IN SECTION J)

- Minimum quantities apply
- To specify an option, replace the "01" standard suffix with the suffix of the option.
- To specify multiple options, replace the "01" suffix with the desired suffixes in the numerical order shown below. NOTE: Not all suffixes can be combined together.

(SUFFIX)	OPTION	SIZES
-01	Standard Configuration	All
-P -01-	BSPP (Parallel) Thread Connection	1/4" to 2"
-T -01-	BSPT (Tapered) Thread Connection	1/4" to 2"
-08-	90° Reversed Stem	1/4" to 2"
-14-	Side Vented Ball (Uni-Directional)	1/4" to 2"
-20-	Slot Vented Ball	1/4" to 2"
-21-	UHMWPE Seats (Non-PTFE)	1/4" to 2"
-24-	Graphite Packing	1/4" to 2"
-35-	PTFE Trim	1/4" to 2"
-49-	No Lubrication. Assembled Dry.	1/4" to 2"
-57-	Oxygen Cleaned	1/4" to 2"

Pressure/Temperature Ratings - Page M-10, Graph No. 4

STANDARD MATERIAL LIST

	PART	MATERIAL
1	Handle	SS w/vinyl
2	Stem packing	Multifill PTFE
3	Stem bearing	RPTFE
4	Ball	B16 Brass, chrome plated
5	Seat (2)	Multifill PTFE
6	Retainer	B16 Brass (1/4" to 1") B584-C84400 (1-1/4" to 2")
7	Gland nut	B16 Brass
8	Stem	A276-316
9	Lever nut	Steel, zinc plated
10	Body seal	PTFE (1-1/4" to 2")
11	Body	B584-C84400

aalberts integrated piping systems

74-100 SERIES

CHEMICAL RESISTANT NICKEL BALL VALVE

Female NPT Thread, 800 CWP (psig), Cold Non-Shock.
150 psig Saturated Steam.
Vacuum Service to 29 inches Hg.

FEATURES

- Investment cast components
- Reinforced
- SS lever and nut
- Blowout-proof stem design
- Adjustable packing gland
- Fire safe "by design" (requires -24 suffix)

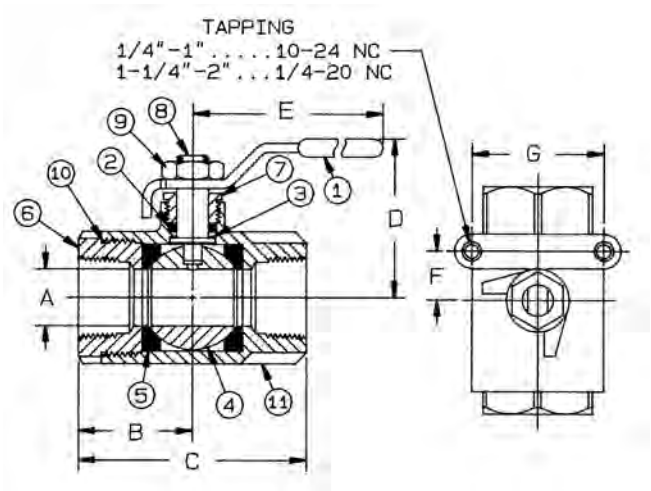

STANDARD MATERIAL LIST

	PART	MATERIAL
1	Lever and grip	304 SS w/vinyl
2	Stem packing	MPTFE
3	Stem bearing	RPTFE
4	Ball	Nickel 200, ASTM-B162
5	Seat (2)	RPTFE
6	Retainer	Nickel 200, ASTM-B160 (1/2" to 1") Nickel CZ100, ASTM-A494 (1-1/2" to 2")
7	Gland nut	A276-316
8	Stem	Nickel 200, ASTM-B160
9	Lever nut	18-8 SS
10	Body seal	PTFE (1-1/2" & 2")
11	Body	Nickel CZ100, ASTM-A494

DIMENSIONS

PART NO.	SIZE	A	B	C	D	E	WT.
74-103-01	1/2"	0.50	1.12	2.25	1.75	3.87	0.58
74-104-01	3/4"	0.68	1.50	3.00	2.12	4.87	1.18
74-105-01	1"	0.87	1.68	3.37	2.25	4.87	1.57
74-107-01	1-1/2"	1.25	2.18	4.37	3.06	8.00	4.11
74-108-01	2"	1.50	2.34	4.68	3.25	8.00	6.02

OPTIONS AVAILABLE

(MORE INFORMATION IN SECTION J)

- Minimum quantities apply
- To specify an option, replace the "01" standard suffix with the suffix of the option.
- To specify multiple options, replace the "01" suffix with the desired suffixes in the numerical order shown below. NOTE: Not all suffixes can be combined together.

(SUFFIX)	OPTION	SIZES
-01	Standard Configuration	All
-P -01-	BSPP (Parallel) Thread Connection	1/2" to 2"
-T -01-	BSPT (Tapered) Thread Connection	1/2" to 2"
-02-	Stem Grounded	1/2" to 2"
-04-	2-1/4" Stem Extension (Carbon Steel, Zinc Plated)	1/2" to 2"
-07-	Steel Tee Handle	1/2" to 2"
-14-	Side Vented Ball (Uni-Directional)	1/2" to 2"
-15-	Wheel Handle, Steel	1/2" to 2"
-16-	Chain Lever - Vertical	3/4" to 2"
-18-	Plain Yellow Grip	1/2" to 2"
-21-	UHMWPE Seats (Non-PTFE)	1/2" to 2"
-24-	Graphite Packing (fire safe "by design")	1/2" to 2"
-27-	SS Latch-Lock Lever & Nut	1/2" to 2"
-30-	Cam-Lock and Grounded	1/2" to 2"
-32-	SS Tee Handle & Nut	1/2" to 2"
-35-	PTFE Trim	1/2" to 2"
-39-	SS Hi-Rise, Locking Wheel Handle, SS Nut	1/2" to 2"
-45-	Less Lever & Nut	1/2" to 2"
-46-	Latch Lock Lever - Lock Close Only	1/2" to 2"
-48-	SS Oval Handle (No Latch) & Nut	1/2" to 2"
-49-	No Lubrication. Assembled Dry.	1/2" to 2"
-50-	2-1/4" CS Locking Stem Extension	1/2" to 2"
-56-	Multifill Seats & Packing	1/2" to 2"
-58-	Chain Lever - Horizontal	3/4" to 2"
-60-	Grounded Ball & Stem	1/2" to 2"

Pressure/Temperature Ratings - Page M-18, Graph No. 22

75-100 SERIES

BRONZE PAD LOCKING BALL VALVE

Female NPT Thread, 600 CWP (psig), Cold Non-Shock.
150 psig Saturated Steam.
Vacuum Service to 29 inches Hg.
MSS SP-110 Compliant.

FEATURES

- Reinforced seats
- Blowout-proof stem design
- May be padlocked in open or closed position with no change of hardware
- Adjustable packing gland

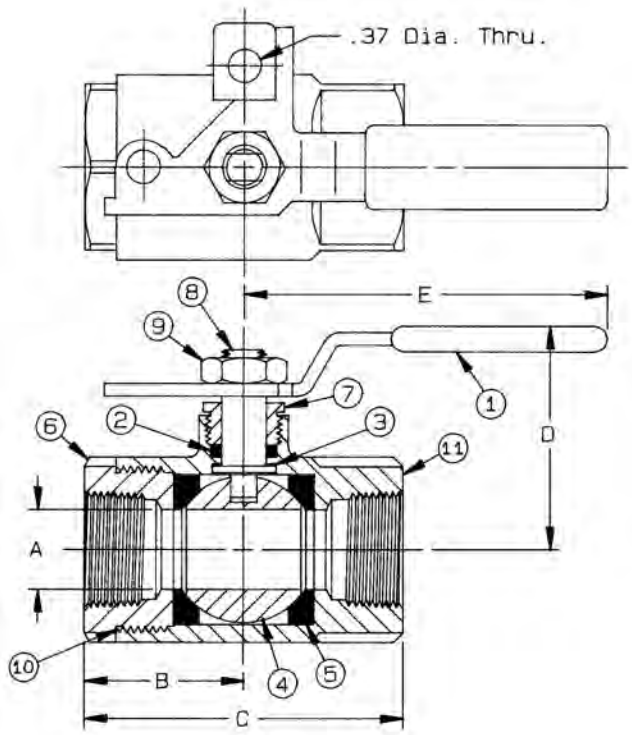

DIMENSIONS

PART NO.	SIZE	A	B	C	D	E	WT.
75-101-01	1/4"	0.43	1.10	2.22	1.74	2.87	0.80
75-102-01	3/8"	0.50	1.10	2.22	1.74	2.87	0.77
75-103-01	1/2"	0.50	1.10	2.22	1.74	2.87	0.70
75-104-01	3/4"	0.87	1.68	3.35	2.20	3.81	2.03
75-105-01	1"	0.87	1.68	3.35	2.20	3.81	1.83
75-106-01	1-1/4"	1.00	1.98	3.97	2.56	5.50	3.48
75-107-01	1-1/2"	1.25	2.14	4.31	2.74	5.50	4.23
75-108-01	2"	1.50	2.35	4.67	2.93	5.50	5.69

VARIATIONS AVAILABLE

- 75-140 Series (316 SS Ball & Stem)
- 75-190 Series (Pinned Retainer)

OPTIONS AVAILABLE

(MORE INFORMATION IN SECTION J)

- Minimum quantities apply
- To specify an option, replace the "01" standard suffix with the suffix of the option.
- To specify multiple options, replace the "01" suffix with the desired suffixes in the numerical order shown below. NOTE: Not all suffixes can be combined together.

(SUFFIX)	OPTION	SIZES
-01	Standard Configuration	All
-P -01-	BSPP (Parallel) Thread Connection	1/4" to 2"
-T -01-	BSPT (Tapered) Thread Connection	1/4" to 2"
-02-	Stem Grounded	1/4" to 2"
-05-	Plain Ball	1/4" to 2"
-08-	90° Reversed Stem	1/4" to 2"
-10-	SS Lever & Nut	1/4" to 2"
-14-	Side Vented Ball (Uni-Directional)	1/4" to 2"
-17-	Rough Chrome Plated - Bronze Valves	1/4" to 2"
-18-	Plain Yellow Grip	1/4" to 2"
-20-	Slot Vented Ball	1/4" to 2"
-21-	UHMWPE Trim (Non-PTFE)	1/4" to 2"
-24-	Graphite Packing	1/4" to 2"
-35-	PTFE Trim	1/4" to 2"
-41-	Automatic Drain (+50°F to 200°F limit. 125 psig max.)	1/4" to 2"
-49-	No Lubrication. Assembled Dry.	1/4" to 2"
-57-	Oxygen Cleaned	1/4" to 2"
-60-	Grounded Ball & Stem	1/4" to 2"

Pressure/Temperature Ratings - Page M-10, Graph No. 4

STANDARD MATERIAL LIST

	PART	MATERIAL
1	Lever and grip	Steel, zinc plated w/vinyl
2	Stem packing	MPTFE
3	Stem bearing	RPTFE
4	Ball	B16 Brass, chrome plated
5	Seat (2)	RPTFE
6	Retainer	B16 Brass (1/4" to 1") B584-C84400 (1-1/4" to 2")
7	Gland nut	B16 Brass
8	Stem	B16 Brass
9	Lever nut	Steel, zinc plated
10	Body seal	PTFE (1-1/4" & 2")
11	Body	B584-C84400

REV. 20JUL16

76-500 SERIES

STAINLESS STEEL BALL VALVE W/ SPRING RETURN HANDLE

5 YEAR WARRANTY MADE IN USA

Female NPT Thread, 1/4" to 1" 2000 CWP (psig), 1-1/4" to 2" 1500 CWP (psig). Cold Non-Shock.
150 psig Saturated Steam.
Vacuum Service to 29 inches Hg.
MSS SP-110 Compliant.

FEATURES

- Spring return to close (-01)
- Spring return to open (-08)
- Carbon and Graphite Reinforced seats (MPTFE)
- All components of lever are stainless steel
- Operating torque is approximately three times standard valve torque
- Blowout-proof stem design
- Adjustable packing gland
- Meets NACE MR0175 (2000) & MR0103 (2012)
- Investment cast components
- Fire safe "by design" (requires -24 suffix)

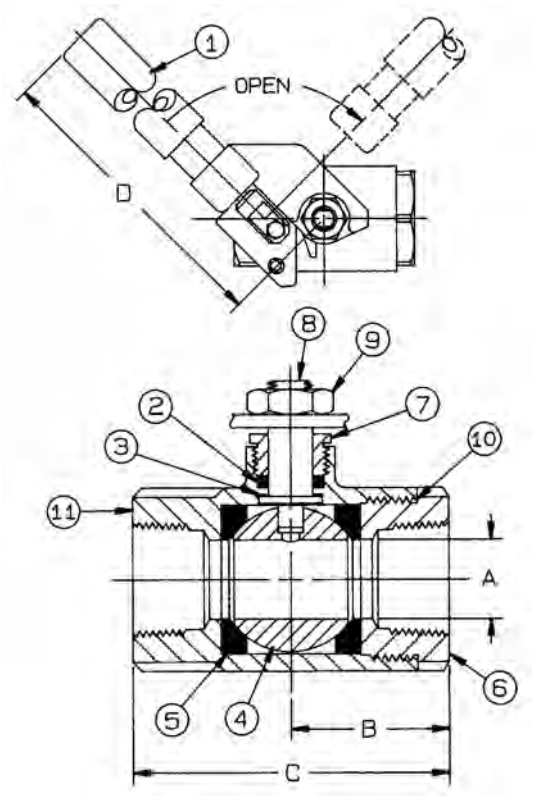

DIMENSIONS

PART NO.	SIZE	A	B	C	D	WT.
76-501-01A	1/4"	0.37	1.03	2.06	7.00	1.26
76-502-01A	3/8"	0.37	1.03	2.06	7.00	1.25
76-503-01A	1/2"	0.50	1.12	2.25	7.00	1.31
76-504-01A	3/4"	0.68	1.50	3.00	7.00	1.98
76-505-01A	1"	0.87	1.68	3.37	7.00	2.35
76-506-01	1-1/4"	1.00	2.00	4.00	9.00	3.96
76-507-01	1-1/2"	1.25	2.18	4.37	9.00	4.78
76-508-01	2"	1.50	2.75	5.50	9.00	6.66

OPTIONS AVAILABLE

(MORE INFORMATION IN SECTION J)

- inimum quantities apply
- To specify an option, replace the "01" standard suffix with the suffix of the option.
- To specify multiple options, replace the "01" suffix with the desired suffixes in the numerical order shown below. NOTE: Not all suffixes can be combined together.

(SUFFIX)	OPTION	SIZES
-01	Standard Configuration	All
-P -01-	BSPP (Parallel) Thread Connection	1/4" to 2"
-T -01-	BSPT (Tapered) Thread Connection	1/4" to 2"
-08-	90° Reversed Stem	1/4" to 2"
-14-	Side Vented Ball (Uni-Directional)	1/4" to 2"
-21-	UHMWPE Seats (Non-PTFE)	1/4" to 2"
-24-	Graphite Packing (fire safe "by design")	1/4" to 2"
-35-	PTFE Trim	1/4" to 2"
-44-	Seal Welded	1/4" to 2"
-49-	No Lubrication. Assembled Dry.	1/4" to 2"
-52-	Two Tack Welds	1/4" to 2"
-57-	Oxygen Cleaned	1/4" to 2"
-60-	Grounded Ball & Stem	1/4" to 2"

Pressure/Temperature Ratings -
Page M-14, Graph No. 14 (1/4" to 1")
Page M-13, Graph No. 12 (1-1/4" to 2")

STANDARD MATERIAL LIST

	PART	MATERIAL
1	Handle	SS w/vinyl
2	Stem packing	Multifill PTFE (MPTFE)
3	Stem bearing	RPTFE
4	Ball	A276-316
5	Seat (2)	Multifill PTFE (MPTFE)
6	Retainer	A276-316 (1/4" to 1") A351-CF8M (1-1/4" to 2")
7	Gland nut	A276-316
8	Stem	A276-316
9	Lever nut	18-8 SS
10	Body seal	PTFE (1-1/4" to 2")
11	Body	A351-CF8M

7K-100-SV SERIES

BRONZE FULL PORT BALL VALVE W/ SAFETY VENT

Female NPT Threaded with Female NPT threaded drain port.
Recommended for water or air services.
Rated 0-200 psig; -20°F to 150°F

FEATURES

- Reinforced seats
- Blowout-proof stem design
- Downstream venting in closed position
- Adjustable packing gland
- Mounting pad for easy actuator mounting
- Full port for full flow

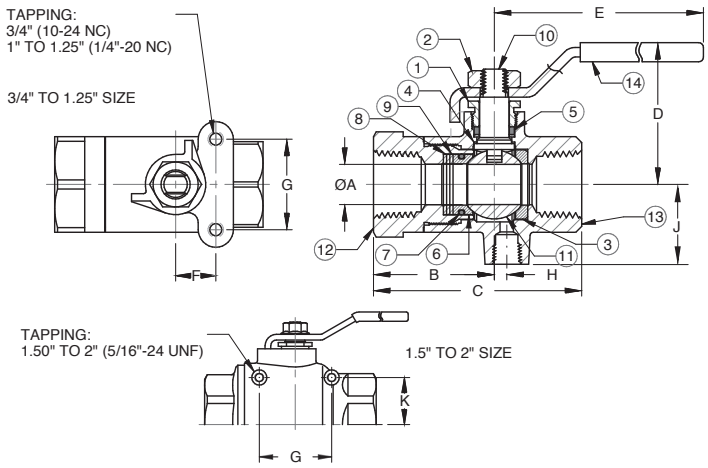

STANDARD MATERIAL LIST

	PART	MATERIAL
1	Packing Gland	B16 Brass
2	Lever nut	Steel, zinc plated
3	Seat	RPTFE
4	Stem bearing	RPTFE
5	Stem packing	RPTFE
6	Seat	RPTFE
7	O-ring	Fluorosilicone
8	Spacer	B16 Brass
9	Belleville washers	Stainless Steel
10	Stem	B16 Brass
11	Ball	B16 Brass, chrome plated
12	Retainer	B16 Brass (1/2" to 1") B584-C84400 (1-1/4" to 2")
13	Body	B584-C84400
14	Lever/grip	Steel, zinc plated w/vinyl

OPTIONS AVAILABLE

(MORE INFORMATION IN SECTION J)

- Minimum quantities apply
- To specify an option, replace the "01" standard suffix with the suffix of the option.
- To specify multiple options, replace the "01" suffix with the desired suffixes in the numerical order shown below. NOTE: Not all suffixes can be combined together.

(SUFFIX)	OPTION	SIZES
-01	Standard Configuration	All
-02-	Stem Grounded	1/2" to 2"
-04-	2-1/4" Stem Extension (Carbon Steel, Zinc Plated)	1/2" to 2"
-07-	Steel Tee Handle	1/2" to 1-1/4"
-08-	90° Reversed Stem	1/2" to 2"
-10-	SS Lever & Nut	1/2" to 2"
-15-	Wheel Handle, Steel	1/2" to 1-1/4"
-16-	Chain Lever - Vertical	3/4" to 2"
-17-	Rough Chrome Plated - Bronze Valves	1/2" to 2"
-18-	Plain Yellow Grip	1/2" to 2"
-24-	Graphite Packing	1/2" to 2"
-27-	SS Latch-Lock Lever & Nut	1/2" to 2"
-30-	Cam-Lock and Grounded	1/2" to 1-1/4"
-32-	SS Tee Handle & Nut	1/2" to 1-1/4"
-40-	Cyl-Loc and Grounded	1/2" to 1-1/4"
-45-	Less Lever & Nut	1/2" to 2"
-46-	Latch-Lock Lever - Lock in Closed Position Only	1/2" to 2"
-47-	SS Latch-Lock Oval Handle & Nut	1/2" to 3/4"
-48-	SS Oval Handle (No Latch) & Nut	1/2" to 2"
-49-	No Lubrication. Assembled Dry.	1/2" to 2"
-50-	2-1/4" CS Locking Stem Extension	1/2" to 2"
-57-	Oxygen Cleaned	1/2" to 2"
-58-	Chain Lever - Horizontal	3/4" to 2"
-60-	Grounded Ball & Stem	1/2" to 2"
-92-	Balancing Stop	1/2" to 2"
-94-	2-1/4" CS Stem Extension & Balancing Stop	1/2" to 2"

DIMENSIONS

PART NO.	SIZE	A	B	C	D	E	F	G	H	J	K	WT.
7K-103-SV	1/2"	0.50	1.50	2.59	1.76	3.88	0.50	1.12	0.12	1.25	-	0.73
7K-104-SV	3/4"	0.81	1.82	3.37	2.16	4.78	0.87	1.37	0.29	1.56	0.90[1]	1.93
7K-105-SV	1"	1.00	2.05	3.86	2.69	5.43	0.93	1.50	0.31	1.78	1.12[1]	3.42
7K-106-SV	1-1/4"	1.25	2.37	4.50	2.91	5.43	0.93	1.50	0.37	2.03	1.37[1]	5.15
7K-107-SV	1-1/2"	1.50	2.63	5.00	3.31	7.78	1.04	3.06	0.50	2.21	1.28[2]	6.81
7K-108-SV	2"	2.00	3.00	5.69	3.73	7.78	1.20	3.52	0.62	2.68	1.56[2]	11.85

1 To Top of Mounting Pad
2 To Centerline of Mounting Pad

REV. 18APR16

77-100-SV SERIES

BRONZE FULL PORT BALL VALVE W/ SAFETY VENT

5 YEAR WARRANTY MADE IN USA

Female NPT Thread, 0-200 psig, -20°F to 150°F
MSS SP-110 Compliant.

FEATURES

- Reinforced seats
- Mounting pad for easy actuator mounting
- Down stream venting in closed position
- Blowout-proof stem design
- Adjustable packing gland
- Full port for full flow & min. pressure drop

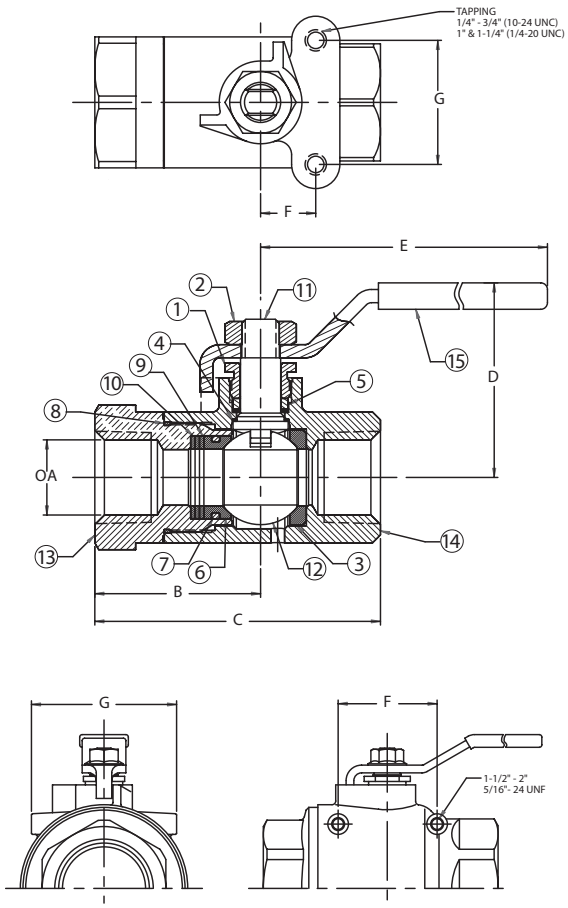

OPTIONS AVAILABLE

(MORE INFORMATION IN SECTION J)

- Minimum quantities apply
- To specify an option, replace the "01" standard suffix with the suffix of the option.
- To specify multiple options, replace the "01" suffix with the desired suffixes in the numerical order shown below. NOTE: Not all suffixes can be combined together.

(SUFFIX)	OPTION	SIZES
-01	Standard Configuration	All
-02-	Stem Grounded	1/4" to 2"
-04-	2-1/4" Stem Extension (Carbon Steel, Zinc Plated)	1/4" to 1-1/4"
-07-	Steel Tee Handle	1/4" to 1-1/4"
-08-	90° Reversed Stem	1/4" to 2"
-10-	SS Lever & Nut	1/4" to 2"
-15-	Wheel Handle, Steel	1/4" to 1-1/4"
-16-	Chain Lever - Vertical	3/4" to 2"
-17-	Rough Chrome Plated - Bronze Valves	1/4" to 2"
-18-	Plain Yellow Grip	1/4" to 2"
-24-	Graphite Packing	1/4" to 2"
-27-	SS Latch-Lock Lever & Nut	1/4" to 2"
-30-	Cam-Lock and Grounded	1/4" to 1-1/4"
-32-	SS Tee Handle & Nut	1/4" to 1-1/4"
-36-	SS High-Rise Round Handle & Nut	1/4" to 1-1/4"
-40-	Cyl-Loc and Grounded	1/4" to 1-1/4"
-45-	Less Lever & Nut	1/4" to 2"
-46-	Latch Lock Lever - Lock in Closed Position Only	1/4" to 2"
-47-	SS Oval Latch-Lock Handle & Nut	1/4" to 3/4"
-48-	SS Oval Handle (No Latch) & Nut	1/4" to 2"
-49-	No Lubrication. Assembled Dry.	1/4" to 2"
-50-	2-1/4" CS Locking Stem Extension	1/4" to 2"
-57-	Oxygen Cleaned	1/4" to 2"
-58-	Chain Lever - Horizontal	3/4" to 2"
-60-	Static Grounded Ball & Stem	1/4" to 2"

DIMENSIONS

PART NO.	SIZE	A	B	C	D	E	F	G	WT.
77-101-SV	1/4"	0.43	1.43	2.52	1.76	3.88	0.50	1.12	0.79
77-102-SV	3/8"	0.50	1.60	2.69	1.76	3.88	0.50	1.12	0.75
77-103-SV	1/2"	0.50	1.50	2.59	1.76	3.88	0.50	1.12	0.69
77-104-SV	3/4"	0.81	1.82	3.37	2.16	5.43	0.87	1.37	1.83
77-105-SV	1"	1.00	2.05	3.86	2.69	5.43	0.93	1.50	3.32
77-106-SV	1-1/4"	1.25	2.37	4.50	2.91	5.43	0.93	1.50	5.05
77-107-SV	1-1/2"	1.50	2.63	7.78	3.31	7.78	2.08	3.06	6.71
77-108-SV	2"	2.00	3.00	5.69	3.73	7.78	2.40	3.52	11.75

STANDARD MATERIAL LIST

	PART	MATERIAL
1	Packing gland	B16 Brass
2	Lever nut	Steel, zinc plated
3	Seat	RPTFE
4	Stem bearing	RPTFE
5	Stem packing	MPTFE
6	Seat	RPTFE
7	O-ring	Fluorosilicone
8	Body seal	PTFE (1-1/4" to 2")
9	Spacer	B16 Brass
10	Belleville washers	SS
11	Stem	B16 Brass
12	Ball	B16 Brass, chrome plated
13	Retainer	B16 Brass (1/4" to 1") B584 C84400 (1-1/4" to 2")
14	Body	B584 C84400
15	Lever/grip	Steel, zinc plated w/vinyl

78-124 & 78-125 SERIES

BRONZE 5-PORT FUEL SELECTOR BALL VALVE

Female NPT Thread. 50 CWP (psig).

FEATURES

- Stainless steel lever and nut
- Non-lubricated design
- Operation: Four selected inlets feed on common outlet.
- Pointer on handle indicates the selected inlet
- Blowout-proof stem design
- Adjustable packing gland
- PTFE seats

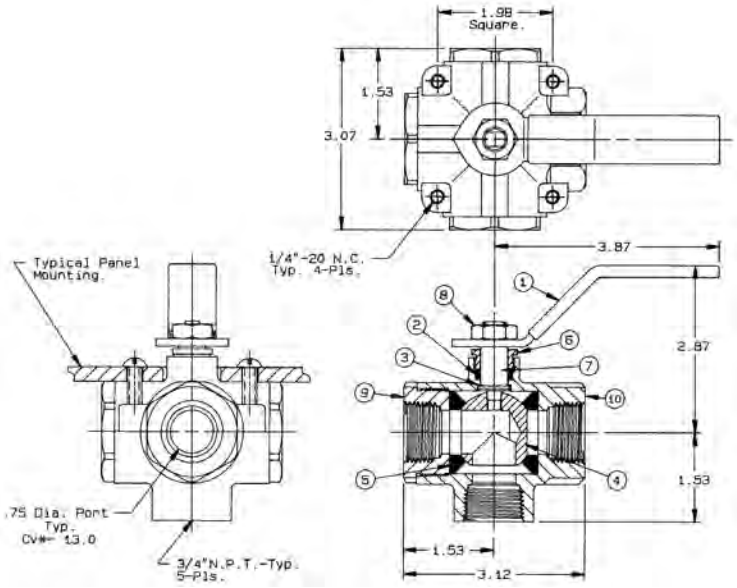

STANDARD MATERIAL LIST

	PART	MATERIAL
1	Lever and grip	304 SS w/vinyl
2	Stem packing	MPTFE
3	Stem bearing	RPTFE
4	Ball	B16 Brass, chrome plated
5	Seat (4)	PTFE
6	Gland nut	B16 Brass
7	Stem	B16 Brass
8	Lever nut	304 SS
9	Retainer (3)	B16 Brass
10	Body	B584-C84400

DIMENSIONS

PART NO.	SIZE	A	B	C	D	E	F	G	H	WT./100
78-124-01	1/2"	0.50	1.26	2.52	2.27	3.53	1.12	10-24	1.40	106
78-125-01A	3/4"	0.75	1.53	3.12	2.87	3.87	1.53	1/4-20	1.98	264

78-248, 250, 256 & 438 SERIES

BRONZE THREADED SURFACE MOUNT BALL VALVE

5 YEAR WARRANTY MADE IN USA

Female NPT Thread, 600 CWP (psig), Cold Non-Shock.
150 psig Saturated Steam.
Vacuum Service to 29 inches Hg.
MSS SP-110 Compliant.

FEATURES

- Two piece body
- Reinforced seats
- Blowout-proof stem design
- Adjustable packing gland

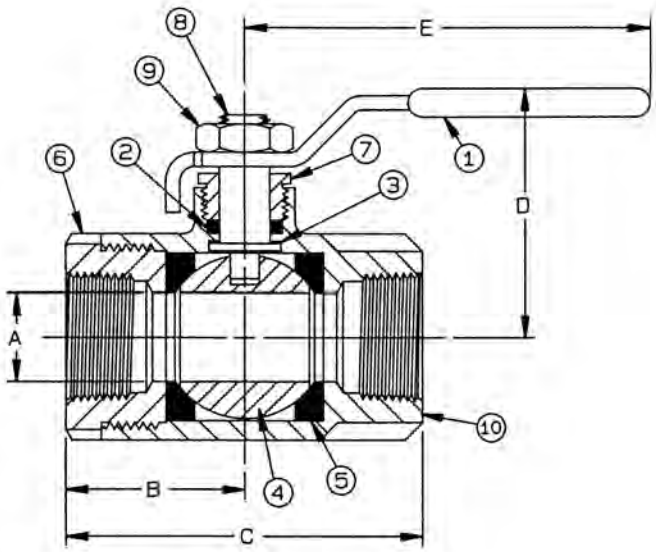

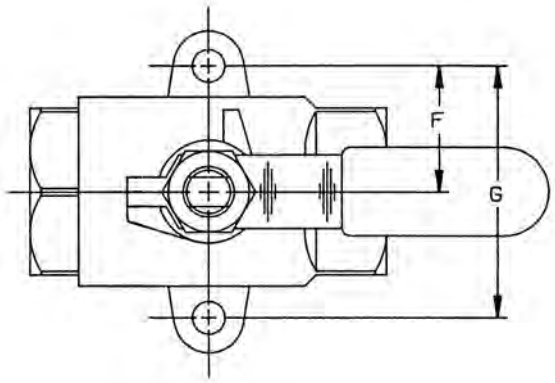

OPTIONS AVAILABLE

(MORE INFORMATION IN SECTION J)

- Minimum quantities apply
- To specify an option, replace the "01" standard suffix with the suffix of the option.
- To specify multiple options, replace the "01" suffix with the desired suffixes in the numerical order shown below. NOTE: Not all suffixes can be combined together.

(SUFFIX)	OPTION	SIZES
-01	Standard Configuration	All
-T -01-	BSPT (Tapered) Thread Connection	1/4" to 3/4"
-04-	2-1/4" Stem Extension (Carbon Steel, Zinc Plated)	1/4" to 3/4"
-07-	Steel Tee Handle	1/4" to 3/4"
-10-	SS Lever & Nut	1/4" to 3/4"
-14-	Side Vented Ball (Uni-Directional)	1/4" to 3/4"
-15-	Wheel Handle, Steel	1/4" to 3/4"
-17-	Rough Chrome Plated - Bronze Valves	1/4" to 3/4"
-27-	SS Latch-Lock Lever & Nut	1/4" to 3/4"
-30-	Cam-Lock and Grounded	1/4" to 3/4"
-32-	SS Tee Handle & Nut	1/4" to 3/4"
-35-	PTFE Trim	1/4" to 3/4"
-41-	Automatic Drain (+50°F to 200°F limit. 125 psig max.)	1/4" to 3/4"
-56-	Multifill Seats & Packing	1/4" to 3/4"
-57-	Oxygen Cleaned	1/4" to 3/4"

Pressure/Temperature Ratings - Page M-10, Graph No. 4

STANDARD MATERIAL LIST

	PART	MATERIAL
1	Lever and grip	Steel, zinc plated w/vinyl
2	Stem packing	MPTFE
3	Stem bearing	RPTFE
4	Ball	B16 Brass, chrome plated
5	Seat (2)	RPTFE
6	Retainer	B16 Brass
7	Gland nut	B16 Brass
8	Stem	B16 Brass
9	Lever nut	Steel, zinc plated
10	Body	B584-C84400

DIMENSIONS

PART NO.	SIZE	A	B	C	D	E	F	G	WT.
78-248-01	1/4"	0.43	1.12	2.25	1.78	3.87	0.93	1.87	0.68
78-250-01	3/8"	0.50	1.12	2.25	1.78	3.87	0.93	1.87	0.68
78-256-01	1/2"	0.50	1.12	2.25	1.78	3.87	0.93	1.87	0.65
78-438-01	3/4"	0.68	1.50	3.00	2.12	4.87	1.06	2.12	1.40

78-257 THRU 78-267 SERIES

BRASS & BRONZE INSTRUMENTATION BALL VALVE

5 YEAR WARRANTY MADE IN USA

Male x Female NPT Thread. 400 CWP (psig), Cold Non-Shock.
Air & Liquid Service Rating.

FEATURES

- Micro-finish ball
- Nitrile stem seal
- Optional mixed end fittings available
- Blowout-proof stem design
- Plated steel tee handle
- PTFE seats
- Compact design

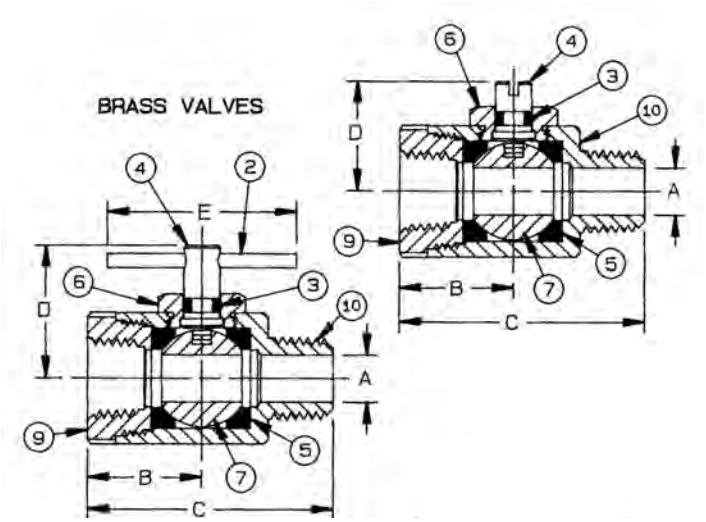

DIMENSIONS

TEE HANDLE NUMBER	SIZE	A	B	C	D	E	C_V*	WT.
BRASS INSTRUMENTATION BALL VALVE								
78-260-05	1/8"M x 1/8"F	0.21	0.37	1.43	0.87	1.25	4.0	0.20
78-261-05	1/4"M x 1/4"F	0.31	0.43	1.43	0.87	1.25	5.5	0.19

SCREW SLOT NUMBER	SIZE	A	B	C	D	E	C_V*	WT.
BRASS INSTRUMENTATION BALL VALVE								
78-262-05	1/8"M X 1/8"F	0.21	0.37	1.43	0.75	N/A	4.0	0.20
78-263-05	1/4"M X 1/4"F	0.31	0.43	1.43	0.75	N/A	5.5	0.19

**The Cv factor is the gallons of water per minute that the valve will pass with a 1 psig pressure drop.*

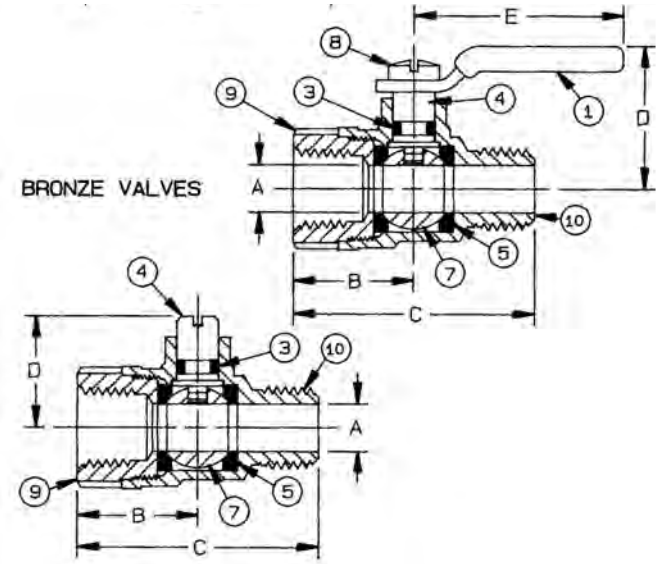

DIMENSIONS

SCREW SLOT NUMBER	SIZE	A	B	C	D	E	C_V*	WT.
BRONZE INSTRUMENTATION BALL VALVE								
78-257-01	1/8"M x 1/4"F	0.21	0.80	1.60	0.72	N/A	4.0	0.19
78-258-01	1/4"M x 1/4"F	0.31	0.80	1.60	0.72	N/A	5.5	0.19

LEVER HANDLE NUMBER	SIZE	A	B	C	D	E	C_V*	WT.
BRONZE INSTRUMENTATION BALL VALVE								
78-267-01	1/4"M X 1/4"F	0.25	0.65	1.45	0.93	1.37	5.5	0.20

**The Cv factor is the gallons of water per minute that the valve will pass with a 1 psig pressure drop.*

Pressure/Temperature Ratings - Page M-10, Graph No. 3

STANDARD MATERIAL LIST

	PART	MATERIAL
1	Lever and grip	Steel, zinc plated w/vinyl
2	Drive pin	Steel, zinc plated
3	O-Ring	Nitrile
4	Stem	B16 Brass
5	Seat (2)	PTFE
6	Stem boss	B16 Brass
7	Ball*	B16 Brass
8	Stem screw	Steel, zinc plated
9	Retainer	B16 Brass
10	Body	B16 Brass or B584-C84400

**Chrome Plated Ball In Bronze Valves.*

aalberts integrated piping systems

78-621 THRU 78-625 SERIES

BRONZE IRRIGATION BALL VALVE

Female NPT Thread. 600 psig Water, Cold Non-Shock.

FEATURES

- Two piece body
- RPTFE seats and stuffing box ring
- Temperature range: +50°F to +200°F
- Blowout-proof stem design
- Adjustable packing gland
- Automatic Draining in the Off Position
- Stainless steel underground curb stop handle

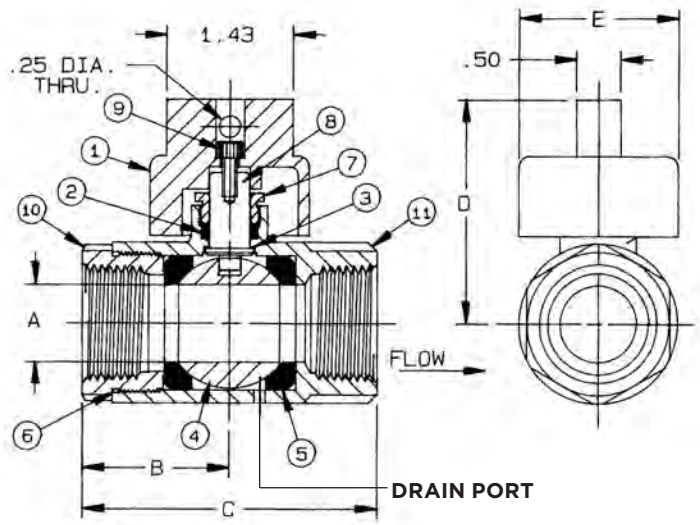

STANDARD MATERIAL LIST

	PART	MATERIAL
1	Head adapter	A351-CF8M
2	Stem packing	MPTFE
3	Stem bearing	RPTFE
4	Ball	B16 Brass, chrome plated
5	Seat (2)	RPTFE
6	Body seal	PTFE (1-1/4" to 2")
7	Gland nut	B16 Brass
8	Stem	B16 Brass
9	Screw	SS
10	Retainer	B16 Brass (3/4" to 1") B584-C84400 (1-1/4" to 2")
11	Body	B584-C84400

Caution: Do not use where drained media could cause damage.
See options section (option -41) for description of Auto-Drain feature.

DIMENSIONS

PART NO.	SIZE	A	B	C	D	E	WT.
78-621-01	3/4"	0.68	1.47	2.96	2.40	1.81	1.59
78-622-01	1"	0.87	1.66	3.34	2.53	1.81	1.92
78-623-01	1-1/4"	1.00	1.98	3.97	3.00	2.50	3.57
78-624-01	1-1/2"	1.25	2.12	4.28	3.18	2.50	4.68
78-625-01	2"	1.50	2.35	4.67	3.37	2.50	6.11

89-500 SERIES

CARBON STEEL BALL VALVE W/ SPRING RETURN HANDLE

Female NPT Thread, 1/4"to 1" 2000 CWP (psig), 1-1/4" to 2" 1500 CWP (psig). Cold Non-Shock.
150 psig Saturated Steam.
Vacuum Service to 29 inches Hg.
MSS SP-110 Compliant.

FEATURES

- Spring return to close ("01" suffix)
- Spring return to open ("08" suffix)
- All components of lever are stainless steel
- Zinc phosphate corrosion protection
- Operating torque is approximately three times standard valve torque
- Blowout-proof stem design
- Adjustable packing gland
- Investment cast components
- Multifill seats
- Fire safe "by design" (requires -24 suffix)

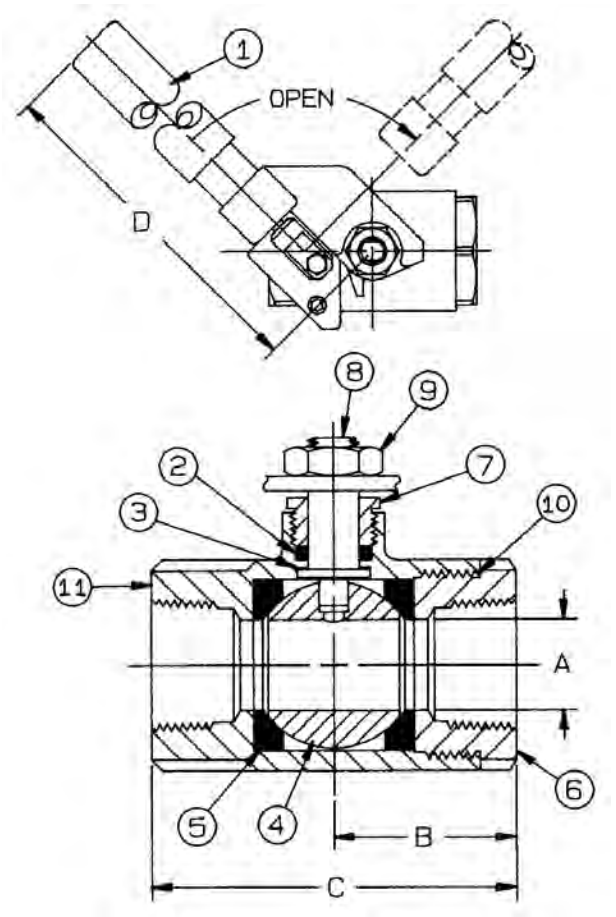

DIMENSIONS

PART NO.	SIZE	A	B	C	D	WT.
89-501-01A	1/4"	0.37	1.03	2.06	7.00	1.26
89-502-01A	3/8"	0.37	1.03	2.06	7.00	1.25
89-503-01A	1/2"	0.50	1.12	2.25	7.00	1.31
89-504-01A	3/4"	0.68	1.50	3.00	7.00	1.98
89-505-01A	1"	0.87	1.68	3.37	7.00	2.35
89-506-01	1-1/4"	1.00	2.00	4.00	9.00	3.96
89-507-01	1-1/2"	1.25	2.18	4.37	9.00	4.78
89-508-01	2"	1.50	2.75	5.50	9.00	6.66

VARIATIONS AVAILABLE

- 89-540 Series (316 SS Ball & Stem)

OPTIONS AVAILABLE

(MORE INFORMATION IN SECTION J)

- Minimum quantities apply
- To specify an option, replace the "01" standard suffix with the suffix of the option.
- To specify multiple options, replace the "01" suffix with the desired suffixes in the numerical order shown below. NOTE: Not all suffixes can be combined together.

(SUFFIX)	OPTION	SIZES
-01	Standard Configuration	All
-P -01-	BSPP (Parallel) Thread Connection	1/4" to 2"
-T -01-	BSPT (Tapered) Thread Connection	1/4" to 2"
-08-	90° Reversed Stem	1/4" to 2"
-14-	Side Vented Ball (Uni-Directional)	1/4" to 2"
-24-	Graphite Packing (fire safe "by design")	1/4" to 2"
-35-	PTFE Trim	1/4" to 2"

Pressure/Temperature Ratings -
Page M-14, Graph No. 13 (1/4" to 1")
Page M-13 Graph No. 11 (1-1/4" to 2")

STANDARD MATERIAL LIST

	PART	MATERIAL
1	Handle	SS
2	Stem packing	Multifill PTFE
3	Stem bearing	RPTFE
4	Ball	A108-CS chrome plated
5	Seat (2)	Multifill PTFE
6	Retainer	A108-CS (1/4" to 1") A216-WCB (1-1/4" to 2")
7	Gland nut	A108-CS
8	Stem	A276-316
9	Lever nut	Steel, Zinc Plated
10	Body seal	PTFE (1-1/4" to 2")
11	Body	A216-WCB

73-300 SERIES

DOUBLE UNION END CARBON STEEL BALL VALVE

Threaded, 3000 CWP (psig), Cold Non-Shock.
150 psig Saturated Steam.
Vacuum Service to 29 inches Hg.
MSS SP-110 Compliant.

FEATURES

- Heavy duty quarter turn lever
- Reinforced seats and seals
- Steel barstock design
- Easy installation and maintenance
- Blowout-proof stem design
- Adjustable packing gland
- Zinc phosphate corrosion protection

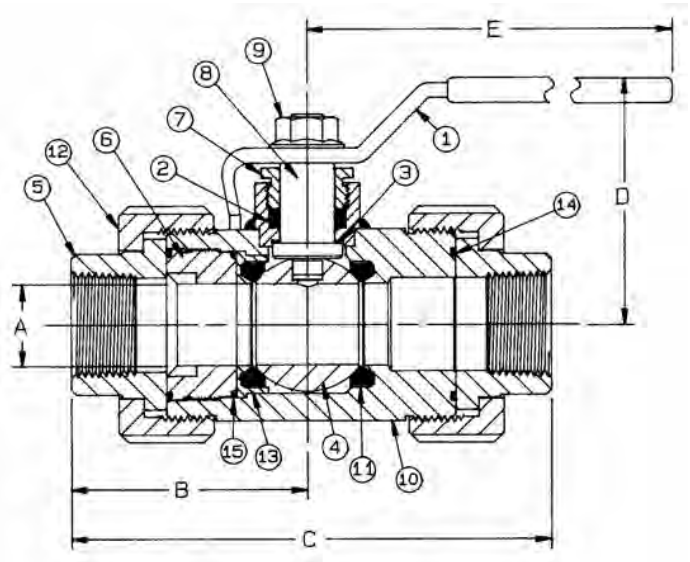

VARIATIONS AVAILABLE

- 73-340 Series(316 SS Ball & Stem)

UL LISTINGS @ 250 PSIG MAX.

- Guide YRPV: Gas shutoff valve for use with natural and manufactured gases.
- Guide YSDT: LP gas shutoff valve.
- Guide YRBX: Flammable liquid shutoff valve.

Note: Listings apply ONLY to the standard -01 valves.

OPTIONS AVAILABLE

(MORE INFORMATION IN SECTION J)

- Minimum quantities apply
- To specify an option, replace the "01" standard suffix with the suffix of the option.
- To specify multiple options, replace the "01" suffix with the desired suffixes in the numerical order shown below. NOTE: Not all suffixes can be combined together.

(SUFFIX)	OPTION	SIZES
-01	Standard Configuration	All
-P -01	BSPP (Parallel) Thread Connection	1/4" to 2"
-T -01	BSPT (Tapered) Thread Connection	1/4" to 2"
-02-	Stem Grounded	1/4" to 2"
-07-	Steel Tee Handle	1/4" to 1-1/2"
-14-	Side Vented Ball (Uni-Directional)	1/4" to 2"
-15-	Wheel Handle, Steel	1/4" to 1"
-18-	Plain Yellow Grip	1/4" to 2"
-19-	Lock Plate	1/4" to 2"
-21-	UHMWPE Seats (Non-PTFE)	1/4" to 2"
-22-	Viton Union Seals	1/4" to 2"
-29-	Graphite Packing & Seals	1/4" to 2"
-45-	Less Lever & Nut	1/4" to 2"
-60-	Grounded Ball & Stem	1/4" to 2"
-63-	Threaded x Socket Weld	1/2" to 2"
-64-	250# Steam Trim	1/4" to 2"

Pressure/Temperature Ratings - Page M-15, Graph No. 15

DIMENSIONS

PART NO.	SIZE	A	B	C	D	E	WT.
73-301-01	1/4"	0.43	2.50	5.00	2.50	5.62	3.51
73-302-01	3/8"	0.57	2.50	5.00	2.50	5.62	3.45
73-303-01	1/2"	0.62	2.50	5.00	2.50	5.62	3.35
73-304-01	3/4"	0.81	2.71	5.31	2.62	5.62	4.48
73-305-01	1"	1.00	2.96	6.06	3.12	6.62	7.04
73-306-01	1-1/4"	1.25	2.87	6.12	3.43	8.00	9.96
73-307-01	1-1/2"	1.50	3.46	7.12	3.56	8.00	14.83
73-308-01	2"	1.75	3.75	7.50	4.18	9.00	20.50

STANDARD MATERIAL LIST

	PART	MATERIAL
1	Lever and grip	Steel, zinc plated w/vinyl
2	Stem packing	RPTFE
3	Stem bearing	RPTFE
4	Ball	ASTM A276, Type 316 Stainless Steel
5	Tailpiece (2)	A108-CS
6	Retainer	A108-CS
7	Gland nut	A108-CS
8	Stem	ASTM A108, CS, zinc phosphate finish or ASTM A276, Type 316 Stainless Steel
9	Lever nut	Steel, zinc plated
10	Body	A108-CS
11	Seat (2)	RPTFE
12	Union nut (2)	A108-CS
13	Seat holder	A108-CS
14	Union seal (2)	RPTFE
15	Retainer seal	RPTFE

73-400 SERIES

CARBON STEEL DOUBLE UNION END SOCKET WELD BALL VALVE

Socket Weld End, 3000 CWP (psig), Cold Non-Shock.
150 psig Saturated Steam.
Vacuum Service to 29 inches Hg.
MSS SP-110 Compliant.

FEATURES

- Heavy duty quarter turn lever
- Reinforced seats and seals
- Steel barstock design
- Easy installation and maintenance
- Blowout-proof stem design
- Adjustable packing gland
- Zinc phosphate corrosion protection

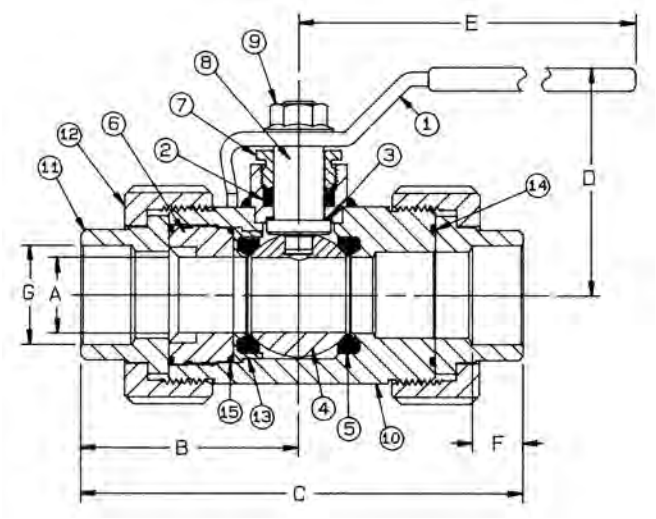

VARIATIONS AVAILABLE

- 73-440 Series (316 SS Ball & Stem)

UL LISTING @ 250 PSIG MAX

- Guide YRPV: Gas shutoff valve for use with natural and manufactured gases.
- Guide YSDT: LP gas shutoff valve.
- Guide YRBX: Flammable liquid shutoff valve.

Note: Listings apply ONLY to the standard -01 valves.

STANDARD MATERIAL LIST

	PART	MATERIAL
1	Lever and grip	Steel, zinc plated w/vinyl
2	Stem packing	RPTFE
3	Stem bearing	RPTFE
4	Ball	ASTM A108, Carbon Steel, Chrome Plated or ASTM A276, Type 316 Stainless Steel
5	Seat (2)	RPTFE
6	Retainer	A108-CS
7	Gland nut	A108-CS
8	Stem	ASTM A108, CS, zinc phosphate finish or ASTM A276, Type 316 Stainless Steel
9	Lever nut	Steel, zinc plated
10	Body	A108-CS
11	Tail Piece (2)	A108-1018
12	Union nut (2)	A108-CS
13	Seat holder	A108-CS
14	Union seal (2)	RPTFE
15	Retainer seal	RPTFE

Pressure/Temperature Ratings - Page M-15, Graph No. 15

DIMENSIONS

PART NO.	SIZE	A	B	C	D	E	F	G	WT.
73-403-01	1/2"	0.62	2.50	5.00	2.50	5.62	0.43	0.855	3.35
73-404-01	3/4"	0.81	2.71	5.31	2.62	5.62	0.56	1.065	4.48
73-405-01	1"	1.00	2.93	6.06	3.12	6.62	0.68	1.330	7.04
73-406-01	1-1/4"	1.25	2.87	6.12	3.43	8.00	0.81	1.675	9.96
73-407-01	1-1/2"	1.50	3.46	7.12	3.56	8.00	0.81	1.915	14.83
73-408-01	2"	1.75	3.75	7.50	4.18	9.00	1.06	2.406	20.50

REV. 04APR16

489-100-A SERIES

CARBON STEEL LP-GAS BALL VALVE

Female NPT Thread, 1/4" to 1" 2000 CWP (psig), 1-1/4" to 2" 1500 CWP (psig), 2-1/2" to 3" 1000 CWP (psig) Cold Non-Shock.
250 psig LP-Gas. 150 psig Saturated Steam.
Vacuum Service to 29 in. Hg.
MSS SP-110 Compliant.

FEATURES

- UL Listed for LP-Gas, natural gas and flammable liquid to 250 psig
- Reinforced seats
- Mounting pad for easy actuator mounting
- Investment cast components
- Blowout-proof stem design
- Adjustable packing gland
- Zinc phosphate corrosion protection

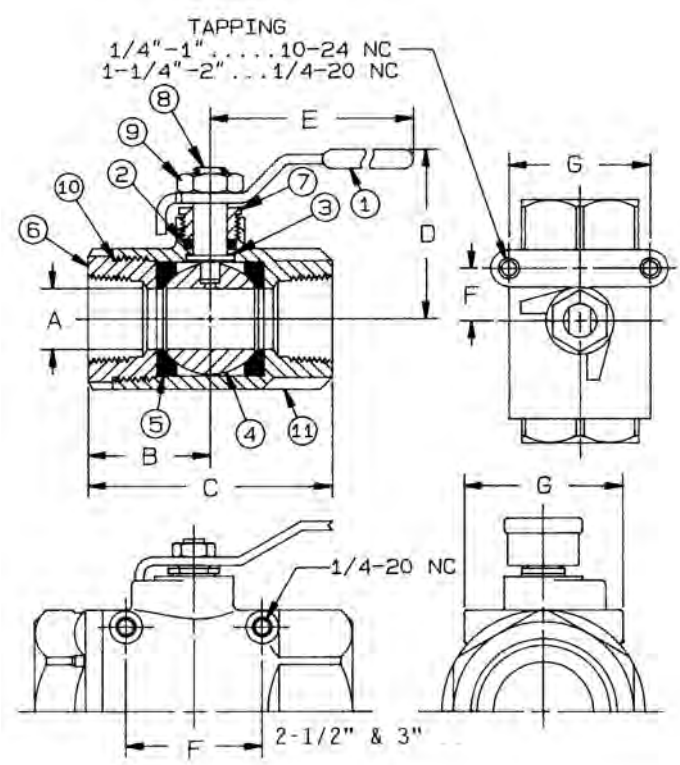

VARIATIONS AVAILABLE

- 489-140-01 Series w/ 316 SS Ball and Stem, UL Listed as noted above

UL LISTINGS

- Guide YSDT: LP-Gas shut-off valve.
- Guide YRPV: Gas shutoff valve for use with natural and manufactured gases.
- Guide YRBX: Flammable liquid shutoff valve.
- Guide MHKZ: No. 6 oil at 250°F.

STANDARD MATERIAL LIST

	PART	MATERIAL
1	Lever and grip	Steel, zinc plated w/vinyl
2	Stem packing	RPTFE
3	Stem bearing	RPTFE
4	Ball	A108-CS Chrome Plated or ASTM A276 316 SS
5	Seat (2)	RPTFE
6	Retainer	A108-12L14 (1/4" to 1") A216-WCB (1-1/4" to 3")
7	Gland nut	A108-12L14
8	Stem	A108-12L14 or A276-316 SS
9	Lever nut	Steel, zinc plated
10	Body seal	PTFE (1-1/4" to 3")
11	Body	A216-WCB

Pressure/Temperature Ratings -
Page M-14, Graph No. 13 (1/4" to 1")
Page M-13, Graph No. 11 (1-1/4" to 2")

DIMENSIONS

PART NO.	SIZE	A	B	C	D	E	F	G	WT.
489-101-01A	1/4"	0.37	1.03	2.06	1.75	3.87	0.50	1.12	0.58
489-102-01A	3/8"	0.37	1.03	2.06	1.75	3.87	0.50	1.12	0.54
489-103-01A	1/2"	0.50	1.12	2.25	1.81	3.87	0.50	1.12	0.63
489-104-01A	3/4"	0.68	1.50	3.00	2.12	4.87	0.87	1.37	1.27
489-105-01A	1"	0.87	1.68	3.37	2.25	4.87	0.87	1.37	1.63
489-106-01	1-1/4"	1.00	2.00	4.00	2.62	5.50	0.93	1.50	3.06
489-107-01	1-1/2"	1.25	2.18	4.37	3.05	8.00	0.93	1.50	3.98
489-108-01	2"	1.50	2.75	5.50	3.24	8.00	0.93	1.50	5.99
489-109-01	2-1/2"	2.50	3.37	6.75	4.12	8.00	2.75	3.37	15.57
489-100-01	3"	2.50	3.37	6.75	4.12	8.00	2.75	3.37	16.79

SECTION H

REVISIONS

PAGE	DATE	DESCRIPTION
H-5	04APR16	Removed reference to Pressure-Temperature Graph 4
H-18	04APR16	Added reference to Pressure-Temperature Graph 15
H-10	18APR16	Corrected dimensions and drawing
H-7	22JUN16	Added -39 option to option table.
H-8	20JUL16	Added -21 and -35 options to option table.

"Apollo" Valves | INDUSTRIAL PRODUCTS

Configuration Options

section J

SECTION J

OPTIONAL CONFIGURATIONS

OPTION	DESCRIPTION	PAGE
-02-	Static Grounding Device	J-3
-04-	2.25" Zinc Plated Carbon Steel Stem Extension Assemblies	J-3
-05-	Plain Ball	J-3
-07-	Steel Tee Handle	J-3
-08-	90º Reversed Stem	J-3
-10-	SS Lever And Nut	J-4
-11-	Therma-Seal™	J-4
-13-	Stamped 157 SWP	J-4
-14-	Side Vented Ball	J-4
-15-	Steel Wheel Handle	J-4
-16 / -58	Horizontal or Vertical Chain Lever	J-5
-17-	Rough Chrome Plated	J-5
-19-	Pad-Locking Devices	J-5
-20-	Slot Vented Ball	J-6
-24-	Graphite Stem Packing	J-6
-27-	SS Latch-Lock Handle and SS Nut	J-6
-29-	Graphite Packing & Seals (73-3, 73-4, 76-3, 76-4)	J-6
-30-	Cam-Lock Handle	J-6
-32-	SS Tee Handle And Nut	J-7
-35-	PTFE Trim	J-7
-39-	SS High-Rise Locking Wheel Handle	J-7
-40-	Cyl-Loc	J-7
-41-	Automatic Drain	J-8
-45-	Less Lever And Nut	J-9
-46-	SS Lock Closed Only	J-9
-47-	SS Latch-Lock Oval Handle	J-9
-50-	2.25" Locking Stem Extension	J-9
-59-	SS Body Trim (Bolts, Nuts & Lever)	J-10
-60-	Grounded Ball And Stem	J-10
-70-	4" Extended Bonnet	J-10
-76-	Live-Loaded (Lever/Handle)	J-10
-77-	Live-Loaded (Gear/Actuator)	J-10
-90-	Double Packed Extended Bonnet	J-11
-9P-	Double Packed Extended Bonnet w/ Port	J-11
-EF-	Graphite Low Fugitive Emissions System	J-11
-ZPX-	TFE Low Fugitive Emissions System	J-11

OPTIONAL CONFIGURATIONS

SUFFIX NO.

-02

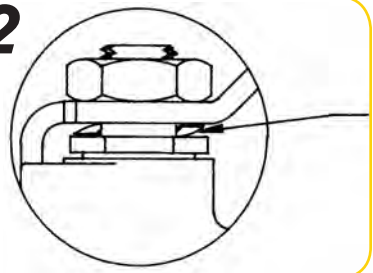

STATIC GROUNDING DEVICE

Used to help prevent static electrical discharge (sparking) between valve components. Accomplished by use of a stainless steel spring washer or coil spring (dependent on valve size). -02 grounds stem, lever & lever nut to valve body.

-04

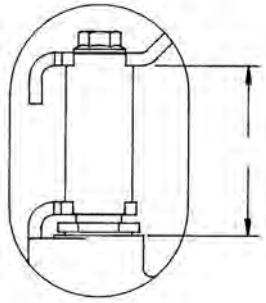

2.25" ZINC PLATED CARBON STEEL STEM EXTENSION

Used to elevate the handle to accommodate pipe insulation or to relocate the position of the handle where necessary. Also available with balancing stop. (Example: 70-100-94)

-05

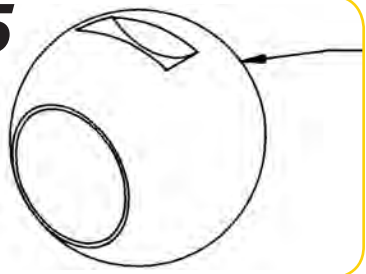

PLAIN BALL

Unplated ball available for bronze valves. Furnished exclusively by customer preference. Not recommended by engineering.

-07

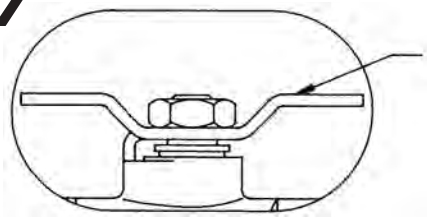

STEEL TEE HANDLE

Used where space limitation prevents use of the standard lever type handle. Useful also to help prevent accidental openings by: Limiting projection of the operating device distance beyond the valve and increasing the turning force required to operate valve. Also, balances the turning effect of vibration.

-08

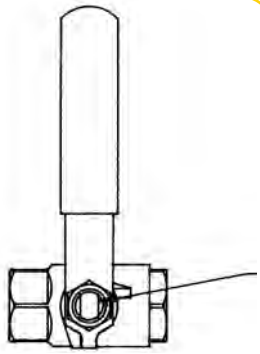

90º REVERSED STEM

Lever grip no longer indicates flow or no flow. (Valve shown in open position).

OPTIONAL CONFIGURATIONS

SUFFIX NO.

-10

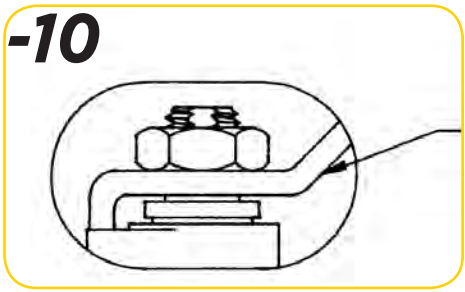

STAINLESS STEEL LEVER & NUT

-11

THERMA-SEAL™

The Therma-Seal™ handle option is designed to maintain the thermal integrity of insulated piping systems and prevent condensation. Condensation can lead to failed insulation, energy loss, water damage and mold. The Therma-Seal™ handle option is most commonly used on chilled water lines.
NEW! Now UL 2043 classified for plenum service.

-13

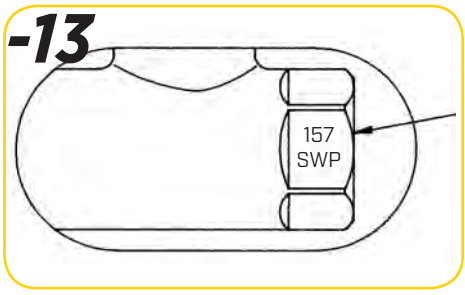

STAMPED 157 SWP

-14

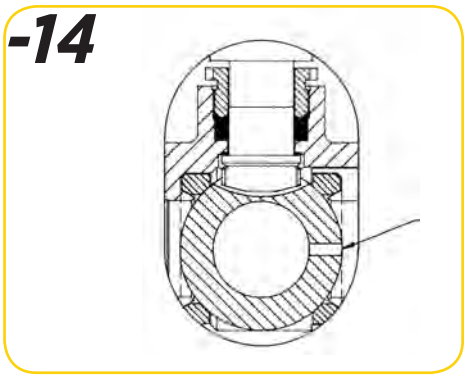

SIDE VENTED BALL

(Uni-Directional Flow)
Vent hole is on the higher pressure side when closed.
Valve body will be stamped with arrow indicating proper flow direction.
Equalizes pressure gain caused by liquid thermal expansion, preventing seat blowout.
Does not reduce the load capability of seats.

-15

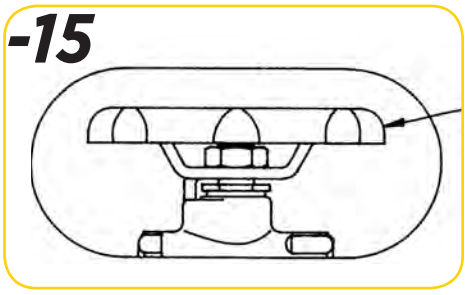

STEEL WHEEL HANDLE

Prevents accidental operation and balances the turning effect of vibration.

OPTIONAL CONFIGURATIONS

SUFFIX NO.

-16
-58

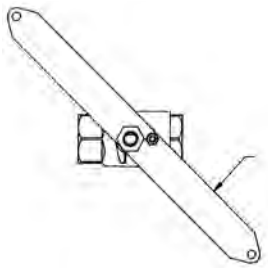

-16 CHAIN LEVER - VALVE PORT VERTICAL
-58 CHAIN LEVER - VALVE PORT HORIZONTAL

-17

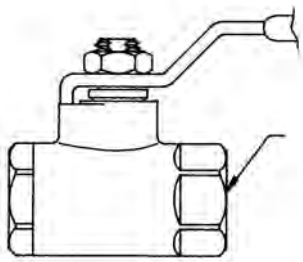

ROUGH CHROME PLATED

-19

PAD-LOCKING DEVICES FOR OBSOLETE 72 & 73 SERIES
Recommended for aftermarket
U.S. PATENT #4,498,320

-19

PAD-LOCKING DEVICES FOR 76 & 89 SERIES

-19

PAD-LOCKING DEVICES FOR 82-100-19 SERIES

OPTIONAL CONFIGURATIONS

SUFFIX NO.

-20

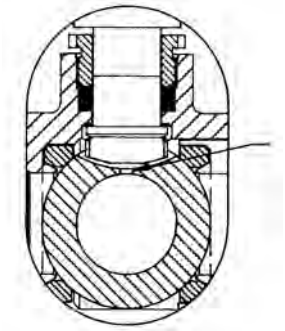

SLOT VENTED BALL
(Bi-Directional Flow)
Available on bronze balls. (All other ball materials are already slot-vented).

-24

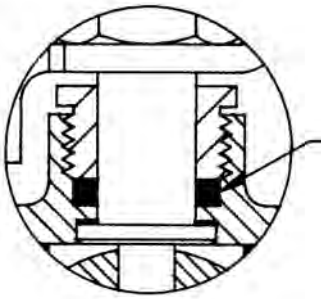

GRAPHITE STEM PACKING
Necessary for firesafe design.

-27

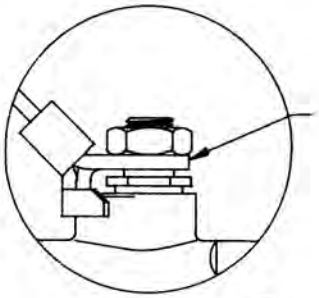

STAINLESS STEEL LATCH-LOCK HANDLE & STAINLESS STEEL NUT

-29

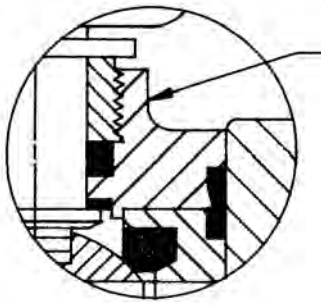

GRAPHITE PACKING & SEALS
73-3xx, 73-4xx, 76-3xx, 76-4xx

-30

CAM-LOCK HANDLE

OPTIONAL CONFIGURATIONS

SUFFIX NO.

-32

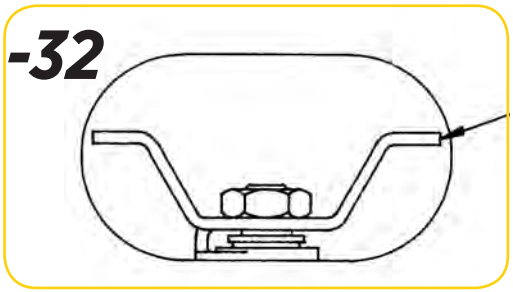

STAINLESS STEEL TEE HANDLE & NUT

-35

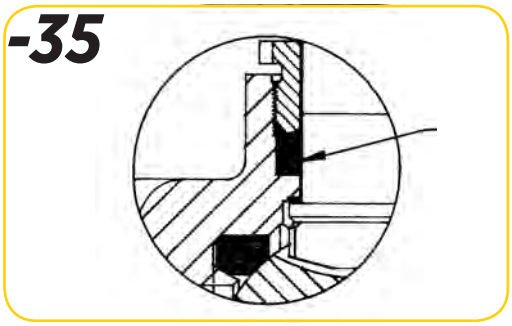

PFTE TRIM

-39

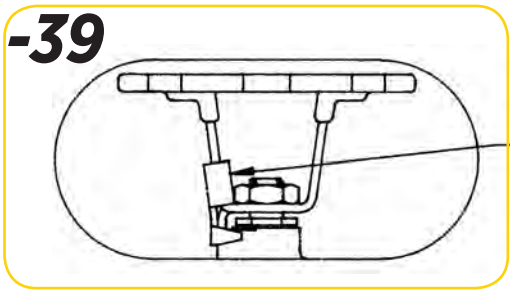

STAINLESS STEEL HIGH-RISE LOCKING WHEEL HANDLE

-40

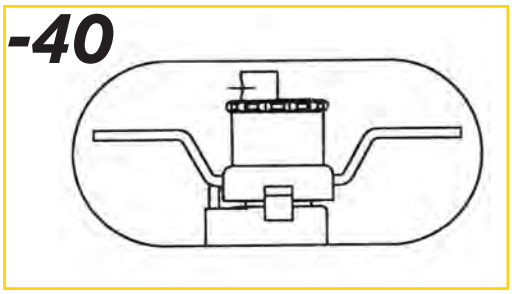

CYL-LOC

OPTIONAL CONFIGURATIONS

SUFFIX NO.

-41

70-100 (Threaded)

AUTOMATIC DRAIN

- Conforms to certain OSHA requirements in pneumatic installations
- Easy, safe maintenance of pneumatic tools
- Cannot be used where drained media could cause damage
- Temperature range: +50°F to 200°F
- Recommended for water or air services only
- Pressures 0- 125 psig

TYPICAL AUTO-DRAIN OPERATION

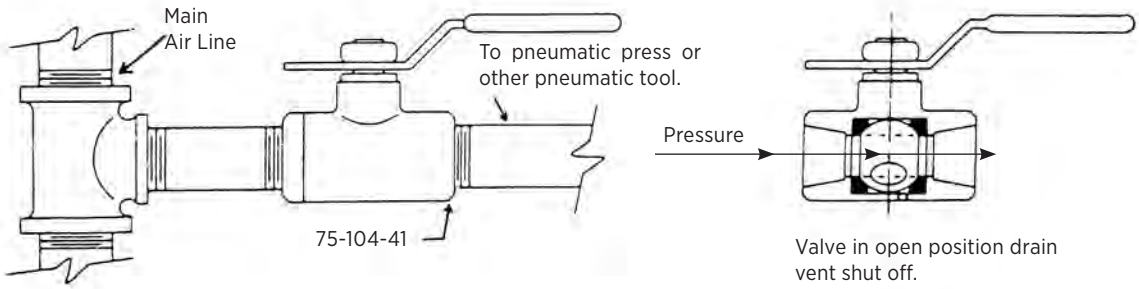

Valve in open position drain vent shut off.

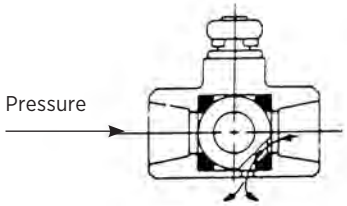

Valve closed and draining. Upstream seat stops air flow. Downstream system is vented to atmosphere.

When this valve is shut off for maintenance of a pneumatic tool, pressure between the valve and tool is automatically drained to atmosphere to prevent possible injury caused by accidental operation of the tool.

NOTE: Temperature variations and dirty systems can cause vent discharge in both the open and closed positions.

OPTIONAL CONFIGURATIONS

SUFFIX NO.

-45

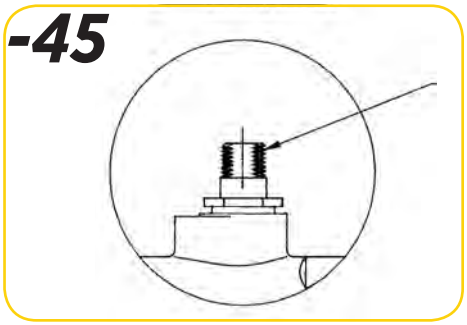

LESS LEVER & NUT

-46

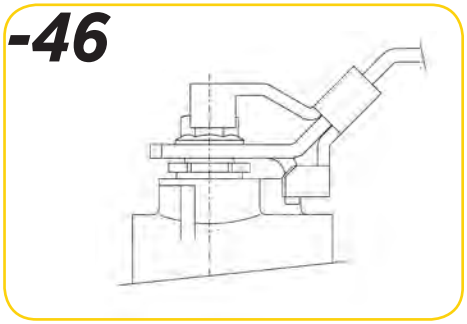

STAINLESS STEEL LOCK CLOSED ONLY
Latch-Lock Handle

-47

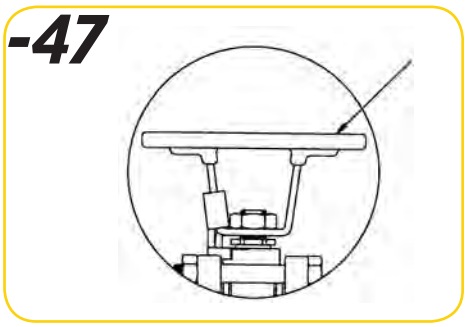

STAINLESS STEEL LATCH-LOCK OVAL HANDLE

-50

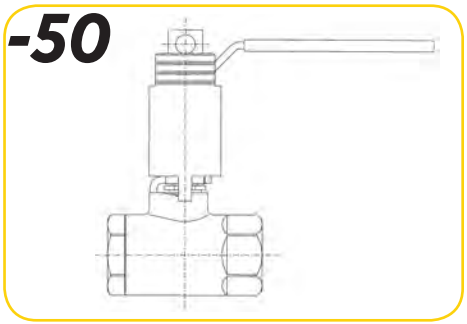

2.25" LOCKING STEM EXTENSION
Zinc Plated CS

OPTIONAL CONFIGURATIONS

SUFFIX NO.

-59

STAINLESS STEEL BODY TRIM (BOLTS, NUTS & LEVER)

-60

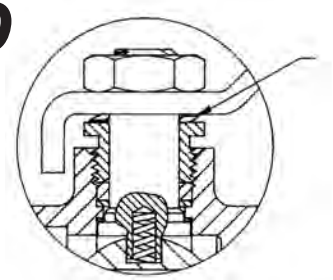

GROUNDED BALL & STEM

-70

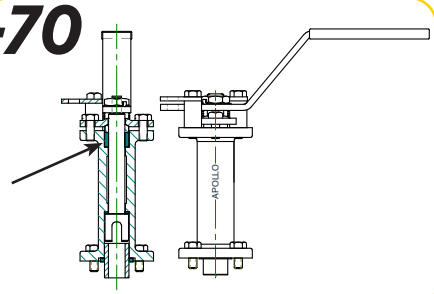

4" EXTENDED BONNET

-76

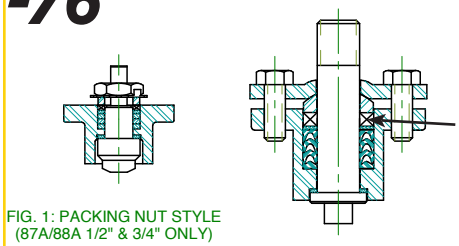

FIG. 1: PACKING NUT STYLE (87A/88A 1/2" & 3/4" ONLY)

FIG. 2: GLAND PLATE STYLE

LIVE-LOADED (LEVER/HANDLE)

-77

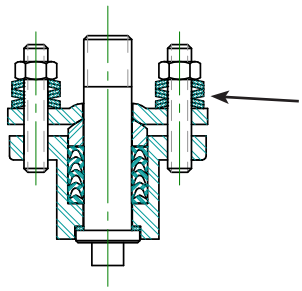

LIVE-LOADED (GEAR/ACTUATOR)

OPTIONAL CONFIGURATIONS

SUFFIX NO.

-90

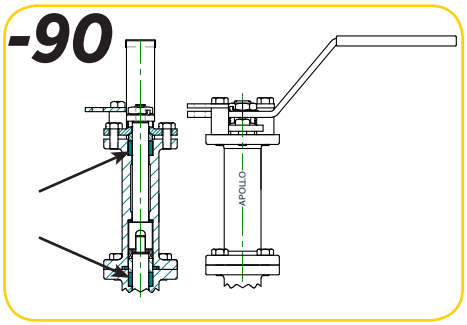

DOUBLE PACKED EXTENDED BONNET

-9P

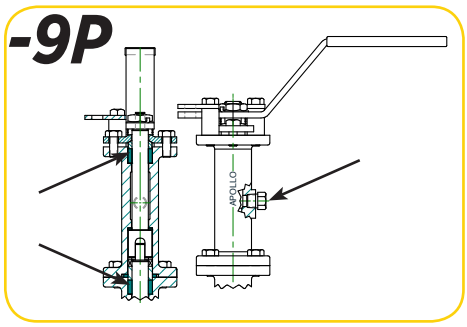

DOUBLE PACKED EXTENDED BONNET W/ PORT

-EF

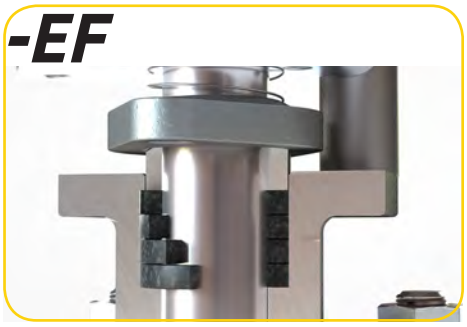

ENVIRONMENTAL GRAPHITE STEM PACKING - ASME BALL VALVES APOLLO'S GRAPHITE LOW FUGITIVE EMISSION SYSTEMS PROVIDE EXCEPTIONAL EMISSIONS CONTROL.

The Apollo graphite low fugitive emissions system ("-EF" suffix) keeps fugitive emission concentrations below the 100 PPMv methane requirement.

- *Numerous flanged and top entry ball valves with the "-EF" suffix are API-641 certified. Contact Apollo®*
- *The "-EF" packing meets API-622.*

-ZP1, -ZP2, -ZP3

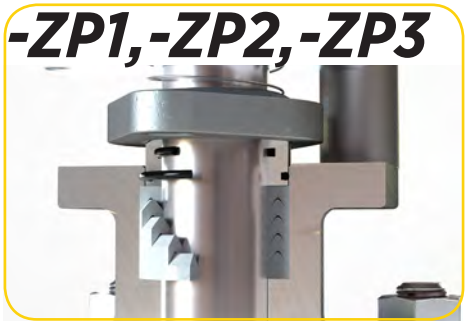

ENVIRONMENTAL TFE STEM PACKING - ASME BALL VALVES APOLLO'S TFE LOW FUGITIVE EMISSION SYSTEMS PROVIDE EXCEPTIONAL EMISSIONS CONTROL.

The Apollo TFE low fugitive emissions system ("-ZP1", "-ZP2", "-ZP3") keep fugitive emission concentrations below the 100 PPMv requirement.

"-ZP1" (Chevron TFE Packing, Viton® O-Rings)
"-ZP2" (Chevron TFE Packing, Buna-N O-Rings)
"-ZP3" (Chevron TFE Packing, Kalrez® 6375 O-Rings)

SECTION J

REVISIONS

PAGE	DATE	DESCRIPTION
J-3	20MAY16	Corrected "-08" suffix (was "-09")
J-10	04MAY17	Added "-70", "-76", "-77" suffixes
J-11	04MAY17	Added "-90", "-9P", "-EF", "-ZPx" suffixes

"Apollo" Valves | INDUSTRIAL PRODUCTS

Engineering Data

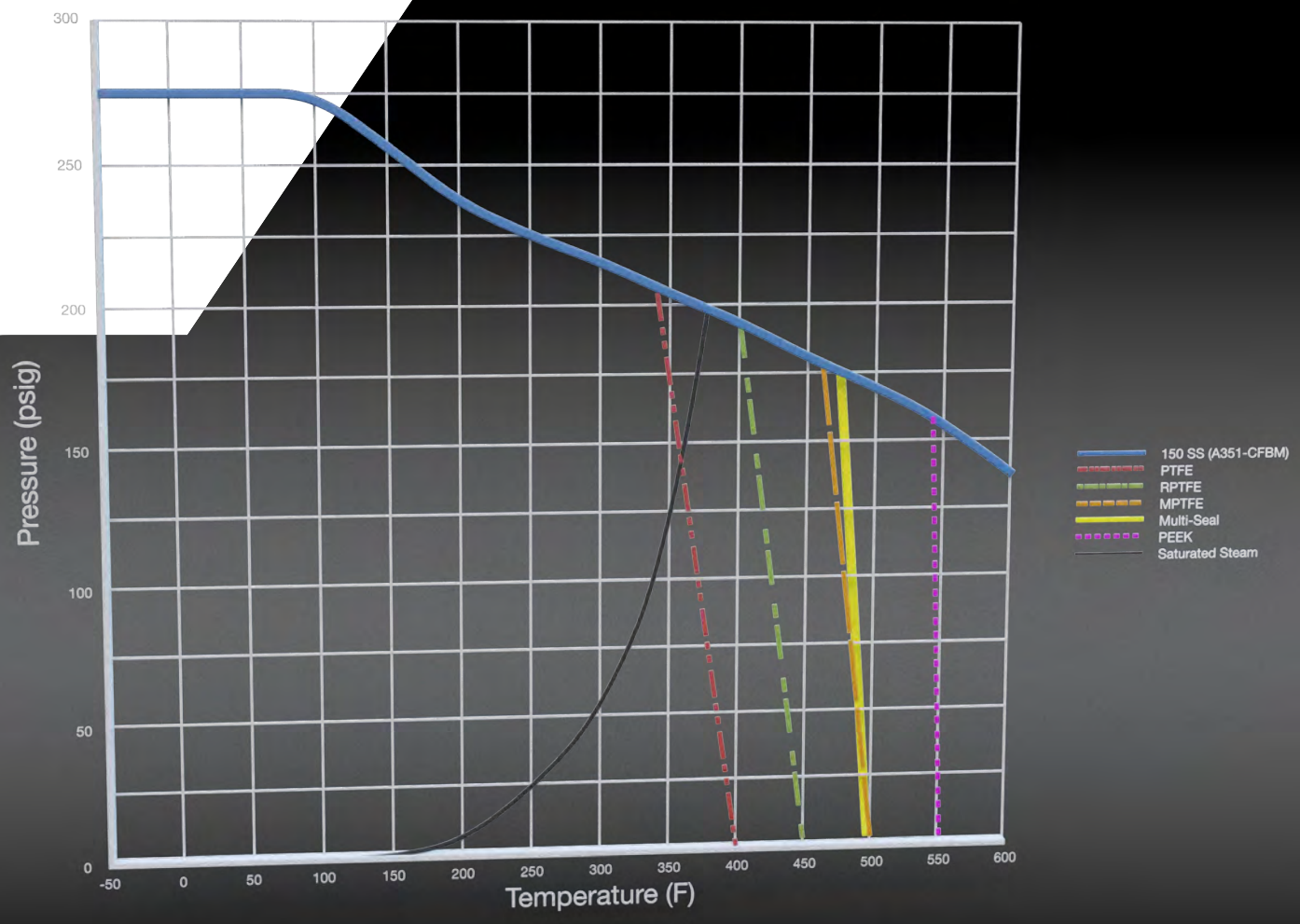

section M

SECTION M

ENGINEERING DATA

SERIES	PAGE
FLOW DATA	M-3 & M-4
CAUTIONARY STATEMENT	M-5
TORQUE CONSTANTS	
APOLLO AR™ TWO PIECE ACTUATOR READY VALVES	M-6
APOLLO END ENTRY VALVES	M-6
APOLLO PEEK SEATED 83B/86B	M-7
APOLLO FLANGED VALVES	M-7
APOLLO CLASS 600 FULL PORT FLANGED VALVES	M-8
PRESSURE-TEMPERATURE RATINGS	
CLASS 150 CARBON AND STAINLESS STEEL FLANGE BALL VALVES	M-9
400 CWP AND 600 CWP BRONZE BALL VALVES	M-10
CLASS 300 CARBON AND STAINLESS STEEL FLANGE BALL VALVES	M-11
1000 CWP CARBON AND STAINLESS STEEL BALL VALVES	M-12
1500 CWP CARBON AND STAINLESS STEEL BALL VALVES	M-13
2000 CWP CARBON AND STAINLESS STEEL BALL VALVES	M-14
3000 CWP CARBON STEEL BALL VALVES	M-15
REFRIGERATION VALVES	M-15
400 CWP CARBON STEEL BALL VALVES	M-16
CLASS 150 ALLOY 20 FLANGE BALL VALVES	M-16
1500 CWP ALLOY 20 BALL VALVES	M-17
2000 CWP ALLOY 20 BALL VALVES	M-17
800 CWP STAINLESS STEEL BALL VALVES	M-18
800 CWP NICKEL BALL VALVES	M-18
1500 CWP CARBON STEEL 3-PIECE BALL VALVES	M-19
1500 CWP STAINLESS STEEL 3-PIECE BALL VALVES	M-19
CLASS 600 CARBON STEEL 3-PIECE BALL VALVES	M-20
CLASS 600 STAINLESS STEEL 3-PIECE BALL VALVES	M-20
CLASS 600 ALLOY 20 3-PIECE BALL VALVES	M-21
CLASS 600 HASTELLOY C 3-PIECE BALL VALVES	M-21
60A AND 60B METAL SEATED, VEE-TIP, NEEDLE VALVES (GLOBE AND ANGLE PATTERNS)	M-22
CLASS 150 CARBON STEEL ASTM A352-LCC FLANGE BALL VALVES	M-23
CLASS 300 CARBON STEEL ASTM A352-LCC FLANGE BALL VALVES	M-23
CLASS 600 CARBON STEEL ASTM A352-LCC FLANGE BALL VALVES	M-24
CLASS 600 STAINLESS STEEL AND CARBON STEEL FLANGE BALL VALVES	M-25 & M-26
CLASS 600 CARBON STEEL ASTM A352-LCC FLANGE BALL VALVES	M-26 & M-27
CLASS 150 DUPLEX ASTM A995 - CD3MN & SUPER DUPLEX CD3MWCUN FLANGE BALL VALVES	M-28
CLASS 300 DUPLEX ASTM A995 - CD3MN & SUPER DUPLEX CD3MWCUN FLANGE BALL VALVES	M-28
CLASS 600 DUPLEX ASTM A995 - CD3MN & SUPER DUPLEX CD3MWCUN FLANGE BALL VALVES	M-29
2000 CWP DUPLEX & SUPER DUPLEX BALL VALVES	M-29
1500 CWP DUPLEX & SUPER DUPLEX BALL VALVES	M-30
1000 CWP DUPLEX & SUPER DUPLEX BALL VALVES	M-30
CLASS 300 ASTM A351-CF3	M-31
MATERIAL REFERENCE DATA	M-31 & M-32
APOLLO BALL VALVE SEAT APPLICATION GUIDE	M-33
CONVERSION FACTORS	M-34 & M-35

FLOW DATA

FLOW DATA

The listed C_v "factors" are derived from actual flow testing, at Apollo's Pageland, South Carolina factory. These tests were completed using standard "off the shelf" valves with no special preparation and utilizing standard schedule 40 pipe. It should be understood that these factors are for the valve only and also include the connection configuration. The flow testing is done utilizing water as a fluid media and is a direct statement of the gallons of water flowed per minute with a 1 psig pressure differential across the valve/connection unit. Line pressure is not a factor. Because the C_v is a factor, the formula can be used to estimate flow of most media for valve sizing.

FLOW OF LIQUID

$$Q = C_V \sqrt{\frac{\Delta P}{SpGr}}$$

$$\text{or } \Delta P = \frac{(Q)^2\,(SpGr)}{(C_v)^2}$$

WHERE:

- Q = Flow in US gpm
- ΔP = Pressure drop (psig)
- SpGr = Specific gravity at flowing temperature
- C_v = Valve constant

FLOW OF GAS

$$Q = 1360\ C_V \sqrt{\frac{(\Delta P)\,(P_2)}{(SpGr)\,(T)}}$$

$$\text{or } \Delta P = \frac{5.4 \times 10^{-7}\,(SpGr)\,(T)\,(Q)^2}{(Cv)^2\,(P_2)}$$

WHERE:

- Q = Flow in SCFH
- ΔP = Pressure drop (psig)
- SpGr = Specific gravity (based on air = 1.0)
- P2 = Outlet pressure–psia (psig + 14.7)
- T = (temp. °F + 460)
- C_v = Valve constant

CAUTION: The gas equation shown, is valid at very low pressure drop ratios. The gas equation is NOT valid when the ratio of pressure drop (ΔP) to inlet pressure (P1) exceeds 0.02.

NOTE: Only use the gas equation shown if (P1-P2)/P1 is less than 0.02.

CV FACTORS FOR APOLLO VALVES (CONTINUED ON M-4)

VALVE	SIZE (IN.)														
	1/4	3/8	1/2	3/4	1	1.25	1.5	2	2.5	3	4	6	8	10	12
70B-140 Series	8.4	7.2	15	30	43	48	84	108	190	370	670	--	--	--	--
70-100/200 Series	8.4	7.2	15	30	43	48	84	108	190	370	670	--	--	--	---
70-300/400 Series	--	--	15	30	43	48	84	108	--	--	--	--	--	--	--
70-600 Series	2.3	4.5	5.4	12	14	21	34	47	--	--	--	--	--	--	--
70-800 Series	8.4	7.2	15	30	43	48	84	--	--	--	--	--	--	--	--
71-AR Series	--	--	--	30	43	48	84	108	190	370	--	--	--	--	--
71-100/200 Series	--	--	--	30	43	48	84	108	190	370	--	--	--	--	--
72-100/900 Series	--	--	26	48	65	125	170	216	--	--	--	--	--	--	--
72-1xx-A/72-9xx-A Series	--	--	26	48	65	125	170	245	--	--	--	--	--	--	--
73A-100 Series	8.4	7.2	15	30	43	48	84	108	--	--	--	--	--	--	--
73-300/400 Series	--	--	26	48	65	125	170	216	--	--	--	--	--	--	--
74-100 Series	8.4	7.2	15	30	43	48	84	108	190	370	670	--	--	--	--
75-100 Series	8.4	7.2	15	30	43	48	84	108	190	370	670	--	--	--	--
76-AR Series	8.4	7.2	15	30	43	48	84	108	190	370	670	--	--	--	--
76F-100 Series	8.1	15	15	51	68	125	177	389	--	--	--	--	--	--	--
76FJ-100 Series	8.1	15	15	51	68	125	177	389	--	--	--	--	--	--	--
76FK-100 Series	8.1	15	15	51	68	125	177	389	--	--	--	--	--	--	--
76-100 Series	8.4	7.2	15	30	43	48	84	108	190	370	--	--	--	--	--
76-300/400 Series	--	--	26	48	65	125	170	216	--	--	--	--	--	--	--
76-600 Series	2.3	4.5	5.4	12	14	21	34	47	--	--	--	--	--	--	--
76J-100 Series	8.4	7.2	15	30	43	48	84	108	190	370	--	--	--	--	--
76J-AR Series	8.4	7.2	15	30	43	48	84	108	190	370	670	--	--	--	--
76K-100 Series	8.4	7.2	15	30	43	48	84	108	190	370	--	--	--	--	--
76K-AR Series	8.4	7.2	15	30	43	48	84	108	190	370	670	--	--	--	--
7K-100 Series	--	--	15	51	68	125	177	389	503	--	--	--	--	--	--
77-AR Series	8.1	15	15	51	68	--	177	389	--	--	--	--	--	--	--

REV. 21APR17

CV FACTORS FOR APOLLO VALVES (CONTINUED FROM M-3)

VALVE	SIZE (IN.)														
	1/4	3/8	1/2	3/4	1	1.25	1.5	2	2.5	3	4	6	8	10	12
77C-100/200 Series	4.5	7.2	16	36	68	125	177	389	503	--	--	--	--	--	--
77D-140 Series	4.5	7.2	16	36	68	125	177	389	--	--	--	--	--	--	--
77D-640 Series	--	--	--	11	24	35	--	--	--	--	--	--	--	--	--
77G-UL Series	4.5	7.2	16	36	68	125	177	389	503	--	--	--	--	--	--
77W Series	--	--	16	36	68	125	177	389	--	--	--	--	--	--	--
77-100/200 Series	8.1	15	15	51	68	125	177	389	503	--	--	--	--	--	--
79 Series	8.5	8.5	9.8	32	44	66	148	218	440	390	--	--	--	--	--
80 Series	8.4	7.2	15	30	43	48	84	108	190	370	--	--	--	--	--
82-100/200 Series	8.1	14	26	51	68	120	170	376	510	996	1893	--	--	--	--
83A/83B Series	8.1	14	26	51	68	120	170	376	--	--	--	--	--	--	--
83R-100/200 Series	--	--	--	--	--	--	170	376	--	996	1893	--	--	--	--
86A/86B Series	8.1	14	26	51	68	120	170	376	--	--	--	--	--	--	--
86R-100/200 Series	--	--	--	--	--	--	170	376	--	996	1893	--	--	--	--
87A-100 Series	--	--	--	--	--	--	86	104	234	375	673	1099	1902	3890	--
87A-200 Series	--	--	15	19	75	--	195	410	545	1021	2016	4837	9250	15170	22390
87A-700 Series	--	--	--	--	--	--	86	104	234	375	673	1099	1902	3890	--
87A-900 Series	--	--	15	19	75	--	195	410	545	1021	2016	4837	9250	15170	22390
87A-F00 Series	--	--	--	--	75	--	195	410	545	1021	2016	4837	--	--	--
87B-100 Series	--	--	--	--	--	--	--	--	--	375	673	1099	1902	3890	--
87J-100 Series	--	--	--	--	--	--	86	104	234	375	673	1099	1902	3890	--
87J-200 Series	--	--	15	19	75	--	195	410	545	1021	2016	4837	9250	15170	22390
87J-700 Series	--	--	--	--	--	--	86	104	234	375	673	1099	1902	3890	--
87J-900 Series	--	--	15	19	75	--	195	410	545	1021	2016	4837	9250	15170	22390
87K-100 Series	--	--	--	--	--	--	86	104	234	375	673	1099	1902	3890	--
87K-200 Series	--	--	15	19	75	--	195	410	545	1021	2016	4837	9250	15170	22390
87K-700 Series	--	--	--	--	--	--	86	104	234	375	673	1099	1902	3890	--
87K-900 Series	--	--	15	19	75	--	195	410	545	1021	2016	4837	9250	15170	22390
88A-100 Series	--	--	--	--	--	--	86	104	234	375	673	1099	1902	3890	--
88A-200 Series	--	--	15	19	75	--	195	410	545	1021	2016	4837	9250	15170	22390
88A-700 Series	--	--	--	--	--	--	86	104	234	375	673	1099	1902	3890	--
88A-900 Series	--	--	15	19	75	--	195	410	545	1021	2016	4837	9250	15170	22390
88A-F00 Series	--	--	--	--	75	--	195	410	545	1021	2016	4837	--	--	--
88B-100 Series	--	--	--	--	--	--	--	--	--	375	673	1099	1902	3890	--
89-100 Series	8.4	7.2	15	30	43	48	84	108	190	370	--	--	--	--	--
9A-100 Series	8.3	6.7	5.7	10	16	25	40	62	--	--	--	--	--	--	--
90-100 Series	8.3	6.7	5.7	10	16	25	40	62	--	--	--	--	--	--	--
92-100 Series	8.3	6.7	5.7	10	16	25	40	62	--	--	--	--	--	--	--
93-100 Series	8.3	6.7	5.7	10	16	25	40	62	--	--	--	--	--	--	--
94A-100/200 Series	6	7	19	34	50	104	268	309	629	1018	1622	--	--	--	--
96-100 Series	8.3	6.7	5.7	10	16	25	40	62	--	--	--	--	--	--	--
399-100 Series	8.4	7.2	15	30	43	48	84	108	190	370	--	--	--	--	--
489-100 Series	8.4	7.2	15	30	43	48	84	108	190	370	--	--	--	--	--

CAUTION

ENGINEERING DATA

IT IS THE RESPONSIBILITY OF THE INSTALLER AND/OR SYSTEM DESIGNER TO ENSURE THAT THESE VALVES ARE INSTALLED IN ACCORDANCE WITH APPLICABLE AND CURRENT ANSI B31 STANDARDS.

Following, are some safeguards that must be considered prior to installation.

EASE OF OPERATION:

Ball Valves are easier to operate than other types of shut-off valves, when these valves are installed so that there is a possibility that the handles can be hooked or snagged, appropriate action to prevent accidental or unwanted opening or closing of the valve must be taken. Vibrations in, through or around the valve can also cause accidental or unwanted opening or closing of the valve.

PRESSURE RELIEF:

Determine and provide corrective action against excessive pressure build up in the valve or piping system due to thermal expansion. Thermal expansion can create extreme pressures well above the working pressure limit of the valve which can cause leaking or bursting of the valve.

SUPPORTS:

If you choose to connect a flexible hose or other non-ridged conduit to the valve, the design of such installation must prevent any “whipping action” that could injure or damage personnel or equipment. Valve must be immobile.

FITTINGS:

Use only those fittings or piping that are compatible with the valves being used to prevent breakage and/or leakage. (As for one example, it is poor practice and never recommended to use plastic pipe or fittings with metallic valves since thermal expansion, external forces or other situations can cause breakage or leakage at or near the joint).

PRESSURE/TEMPERATURE LIMITS:

The maximum cold working pressure limit of the valve is marked on the valve body. Never exceed this “CWP” rating which is specified up to 100°F. Temperatures higher than 100°F decrease the maximum working pressure limit. Refer to the appropriate pressure/temperature chart that is published in the catalog.

FREEZING:

Provide means to protect the valve from freezing and bursting when used with liquids.

FLUID COMPATIBILITY:

Consider the corrosive, erosive and adhesive effects of fluids on the valve and piping components. It is your responsibility to ensure that the valve is compatible with the materials used in the system.

INSTALLATION:

The use of TFE pipe tape as a sealant is recommended for threaded valves when making joints. Correct lubrication of stainless steel pipe threads is especially important to prevent thread galling. Do no apply excessive torque when installing the valve. To prevent distortion or damage to the valve, do not apply torque through the valve. Use wrench hex adjacent to the thread connection being tightened. Use proper supports in handling pre-fabricated sections and in final installation. Always test the system before using.

MAINTENANCE:

Do not disassemble the valve while under pressure. Request a maintenance manual before attempting repairs to the valve.

FOR BRONZE AND BRASS VALVES - PROPOSITION 65 WARNING:

This product is made from bronze alloys which contain lead; a chemical known to the state of California to cause cancer and birth defects and other reproductive harm. (Plumber California law requires that this warning be given to the consumer).

LEAD FREE:

The wetted surfaces of this product shall contain no more than 0.25% lead by weighted average. Complies with Federal Public Law 111-380. ANSI 3rd party approved and listed.

TORQUE CONSTANTS

ENGINEERING DATA

APOLLO AR™ 2-PIECE ACTUATOR READY VALVES

TORQUE CONSTANT (LB-IN) AT DIFFERENTIAL PRESSURE INDICATED PSIG

VALVE MODEL	SIZE	WORKING PRESSURE (PSIG)								LSST*** (IN.-LB.)	-24 ADDER (IN.-LB.)
		100	200	400	600	800	1000	1500	2000		
**STANDARD PORT **71-ARX-64 89-ARX-64 76-ARX-64	1/4 - 1/2	25	26	27	28	30	32	35	38	50	45
	3/4	50	50	52	54	57	60	64	72	100	45
	1	85	86	88	90	94	97	110	138	170	56
	1.25	140	140	145	156	160	172	194		280	96
	1.5	160	164	173	186	195	201	235		320	96
	2	220	230	258	270	310	350	460		440	96
	2.5	450	495	596	680	790	900			900	96
	3	500	540	700	820	920	1030			1000	96
*FULL PORT **77-ARX-64	1/4 - 1/2	25	50	52	54					100	45
	3/4	50	86	88	90					170	56
	1	140	148	160	180					280	56
	1.5	290	300	310	340					580	96
	2	340	355	420	563					680	96

** Torques tested with multifilled seats. Does not require torque adjustment of -20%.*
*** 71-ARX-64 and 77-ARX-64 rated to 600 psig maximum.*
**** LSST - Long Stand Still Torque*

APOLLO END ENTRY VALVES (1), (2)

TORQUE CONSTANT (LB-IN) AT DIFFERENTIAL PRESSURE INDICATED PSIG

VALVE MODEL	SIZE	WORKING PRESSURE (PSIG)						LSST*** (IN.-LB.)	-24 ADDER (IN.-LB.)
		200	400	600	800	1000	1500		
STANDARD PORT 70-64X 71-14X 76-10X 76-60X 89-14X 399-10X	1/4 - 1/2	35	35	40	43	46	48	70	45
	3/4	50	50	54	59	62	64	100	45
	1	101	101	103	106	116	130	202	56
	1.25	171	171	205	216	246	286	342	96
	1.5	192	192	216	265	280	311	384	96
	2	271	271	276	300	309	354	542	96
	2.5 & 3	715	715	790		1200		1430	96
FULL PORT BRONZE 77-14X	1/4 - 1/2	35	35	40				70	45
	3/4	74	74	84				148	56
	1	234	234	250				468	56
	1.25	286	286	321				552	56
	1.5	357	357	398				714	96
	2	650	650	722				1300	96
	2.5 & 3	715	715	790				1430	111
FULL PORT BRONZE 77D-14X	1/2	25	25	25	25			50	
	3/4	55	55	55	55			110	
	1	87	87	87	87			174	
	1.5	120	120	120	120			240	
	2	280	280	280	280			560	
FULL PORT 3-PIECE 82-14X & 24X	1/4 - 1/2	78	78	90				156	56
	3/4	156	156	178				312	56
	1	208	208	230				416	96
	1.25	234	234	276				468	96
	1.5	350	350	390				700	96
	2	715	715	755				1430	96
	3	710						1100	292
	4	1052						1540	292
FULL PORT 3-PIECE 83A-14X & 24X 83B-14X & 24X 86A-10X & 20X 86B-10X & 20X	1/4 - 1/2	38	39	41	42	43	49	75	45
	3/4	61	62	63	63	67	79	121	68
	1	97	104	110	117	124	141	180	68
	1.25	182	198	213	228	243	281	335	96
	1.5	182	198	213	228	243	281	335	96
	2	275	338	402	466	529	688	422	127
FULL PORT 3-PIECE 83R-108-01 & 83R-100-01 86R-108-01 & 86R-100-01	2	715	715	755	800	912	1024	1430	96
	3	1030	1030	1087	1148	1212		2060	201

**** LSST - Long Stand Still Torque*

TORQUE CONSTANTS

ENGINEERING DATA

APOLLO 83B/86B PEEK SEATED W/ GRAPHITE STEM PACKING

TORQUE CONSTANT (LB-IN) AT DIFFERENTIAL PRESSURE INDICATED PSIG

VALVE MODEL	SIZE	WORKING PRESSURE (PSIG)								LSST (IN.-LB.)
		200	400	600	800	1000	1200	1400	1500	
FULL PORT 3-PIECE 83B/86B	1/4 - 1/2	75	80	86	91	98	105	111	118	112
	3/4	130	150	170	177	185	194	204	210	195
	1	250	263	276	289	302	315	328	345	375
	1.25	420	463	506	549	592	635	678	720	630
	1.5	420	463	506	549	592	635	678	720	630
	2	840	922	1004	1086	1168	1250	1332	1410	1260

Caution: 2" PEEK seated valves operating at pressures higher than 1000 psig. should be automated or have a gear operator installed. Lever operation is not suggested. All values are stated in (in.-lb.)

APOLLO FLANGED BALL VALVES

TORQUE CONSTANT (LB-IN) AT DIFFERENTIAL PRESSURE INDICATED PSIG

VALVE SERIES	SIZE	WORKING PRESSURE (PSIG)									LSST (IN.-LB)	-24 ADDER (IN.-LB)	-EF ADDER (IN.-LB)
		0	100	200	300	400	500	600	700	740			
87A-100s 88A-140s 87B-100s 88B-100s	1-1/2" SP 150	132	144	155	167						264	68	68
	2" SP 150	176	193	211	228						352	96	96
	2-1/2" SP 150	231	254	277	300						462	127	127
	3" SP 150	253	327	402	476						506	127	127
	4" SP 150	850	860	875	890						1700	292	292
	6" SP 150	1325	1345	1370	1400						2650	292	292
	8" SP 150	2200	2494	2788	3081						4400	661	895
	10" SP 150	3300	3580	3860	4140						6600	661	895
87A-200s 88A-240s	1/2" FP 150	22	22	22	22						44	45	45
	3/4" FP 150	39	43	47	51						77	68	68
	1" FP 150	132	144	155	167						264	68	68
	1-1/2" FP 150	176	193	211	228						352	96	96
	2" FP 150	231	254	277	300						462	127	127
	2-1/2" FP 150	253	327	402	476						506	127	127
	3" FP 150	850	860	875	890						1700	292	292
	4" FP 150	1325	1345	1370	1400						2650	292	292
	6" FP 150	2200	2494	2788	3081						4400	661	895
	8" FP 150	3300	3580	3860	4140						6600	661	895
	10" FP 150	4400	5059	5718	6377						8800	988	1625
	12" FP 150	4950	8300	11650	15000						9900	988	1625
87A-700s 88A-740s	1-1/2" SP 300	132	144	155	167	178	190	201	213	217	264	68	68
	2" SP 300	176	193	211	228	245	262	280	297	304	352	96	96
	2-1/2" SP 300	231	254	277	300	323	346	369	392	401	462	127	127
	3" SP 300	253	327	402	476	551	625	700	774	804	506	127	127
	4" SP 300	850	860	875	890	910	950	1030	1110	1142	1700	292	292
	6" SP 300	1325	1345	1370	1400	1430	1474	1615	1756	1812	2650	292	292
	8" SP 300	2200	2494	2788	3081	3375	3669	3963	4257	4374	4400	661	895
	10" SP 300	3300	3580	3860	4140	4420	4700	4980	5260	5372	6600	661	895
87A-900s 88A-940s	1/2" FP 300	22	22	22	22	23	23	23	23	23	44	45	45
	3/4" FP 300	39	43	47	51	55	59	63	67	69	77	68	68
	1" FP 300	132	144	155	167	178	190	201	213	217	264	68	68
	1-1/2" FP 300	176	193	211	228	245	262	280	297	304	352	96	96
	2" FP 300	231	254	277	300	323	346	369	392	401	462	127	127
	2-1/2" FP 300	253	327	402	476	551	625	700	774	804	506	127	127
	3" FP 300	850	860	875	890	910	950	1030	1110	1142	1700	292	292
	4" FP 300	1325	1345	1370	1400	1430	1474	1615	1756	1812	2650	292	292
	6" FP 300	2200	2494	2788	3081	3375	3669	3963	4257	4374	4400	661	895
	8" FP 300	3300	3580	3860	4140	4420	4700	4980	5260	5372	6600	661	895
	10" FP 300	4400	5059	5718	6377	7036	7696	8355	9014	9277	8800	988	1625
	12" FP 300	4950	8300	11650	15000	18349	21699	25049	28399	29739	9900	988	1625

TORQUE CONSTANTS

ENGINEERING DATA

APOLLO TOP ENTRY BALL VALVES

- See Top Entry Ball Valve Section (BVBI Section N) for top entry torque constants.

APOLLO CLASS 600 FULL PORT FLANGED VALVES

TORQUE CONSTANTS

SEAT MATERIAL	SIZE	WORKING PRESSURE (PSIG)								LSST*	-24 ADDER	-EF ADDER
		200	400	600	800	1000	1200	1400	1500			
Devlon V-API (-95)	1"	166	189	211	233	256	275	292	300	288	N/A	N/A
	1.5"	253	273	292	312	331	351	370	380	468	N/A	N/A
	2"	686	698	710	721	732	744	755	761	1350	N/A	N/A
	2.5"	1150	1190	1231	1272	1313	1353	1395	1415	2256	N/A	N/A
	3"	1893	2030	2167	2304	2440	2577	2714	2782	3512	N/A	N/A
	4"	2406	2681	2957	3232	3508	3784	4060	4197	4260	N/A	N/A
	6"	7935	8280	8625	8970	9135	9660	10005	10178	13638	N/A	N/A
	8"	8282	8868	9454	10041	10627	11213	11799	12092	15978	N/A	N/A
PEEK (-38)	1"	184	204	224	245	264	283	304	314	328	N/A	N/A
	1.5"	379	399	420	439	460	479	500	509	468	N/A	N/A
	2"	882	968	1054	1140	1225	1313	1399	1481	1323	N/A	N/A
	2.5"	1256	1320	1384	1448	1512	1576	1640	1672	2384	N/A	N/A
	3"	2378	2588	2797	3007	3217	3427	3637	3741	4336	N/A	N/A
	4"	5771	6832	7892	8952	10012	11073	12133	12663	9422	N/A	N/A
	6"	6983	8675	10368	12061	13753	15446	17139	17985	10580	N/A	N/A
	8"	8586	12822	17058	21294	25531	29767	34003	36121	12936	N/A	N/A
UHMWPE (-21)	1"	155	178	201	219	222	224	228	228	264	N/A	N/A
	1.5"	211	245	280	305	310	315	318	318	352	N/A	N/A
	2"	428	454	479	505	531	556	582	594	806	N/A	N/A
	2.5"	447	467	486	506	525				875	N/A	N/A
	3"	1139	1224	1310	1396	1482				2106	N/A	N/A
	4"	1506	1638	1820	2002	2184				2600	N/A	N/A
	6"	3133	3487	3842						5558	N/A	N/A
	8"	3814	4354	4894						7088	N/A	N/A
MULTISEAL (-80)	1"	155	180	205	222	227	231	233	234	264	102	102
	1.5"	213	245	280	308	316	322	326	326	354	144	144
	2"	313	356	400	444	487	531	575	597	538	191	191
	2.5"	410	437	465	493	520				791	191	191
	3"	875	890	1030	1151	1228				1112	292	292
	4"	1506	1584	1683	1781	1880				2776	292	292
	6"	2788	3375	3963						4824	661	895
	8"	4836	5175	5514						8993	988	1625

Caution: For torque constants in the highlighted areas, manual valve operation is not suggested. Automated and gear operated assembly options are available. All values are stated in (in-lb)

PRESSURE/TEMPERATURE RATINGS

ENGINEERING DATA

CLASS 150 (CS) ASTM A216-WCB GRAPH 1

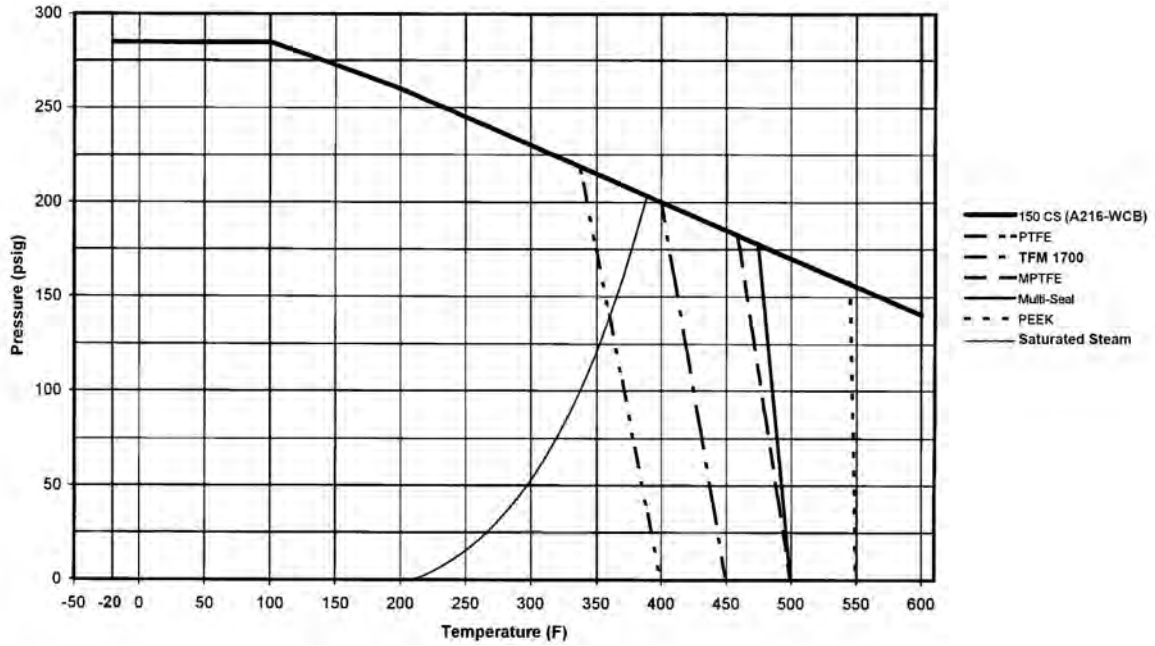

CLASS 150 (SS) ASTM A351-CF8M OR ASTM A351-CF3M GRAPH 2

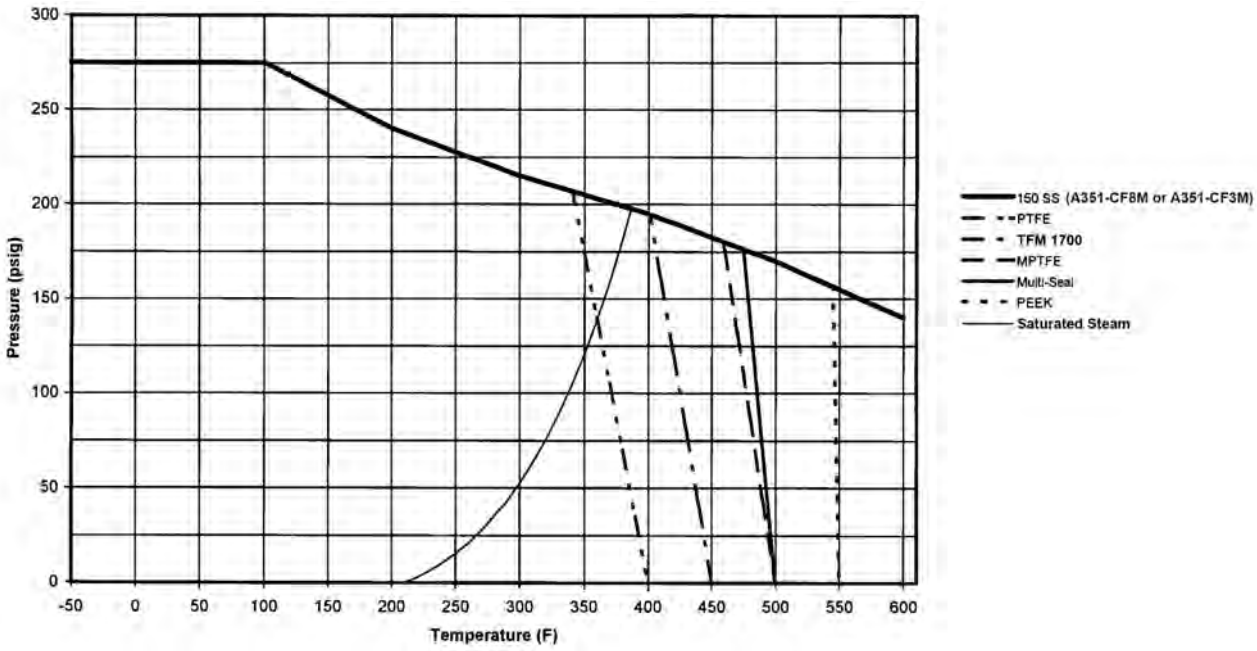

PRESSURE/TEMPERATURE RATINGS

ENGINEERING DATA

400 CWP BRONZE ASTM B584 GRAPH 3

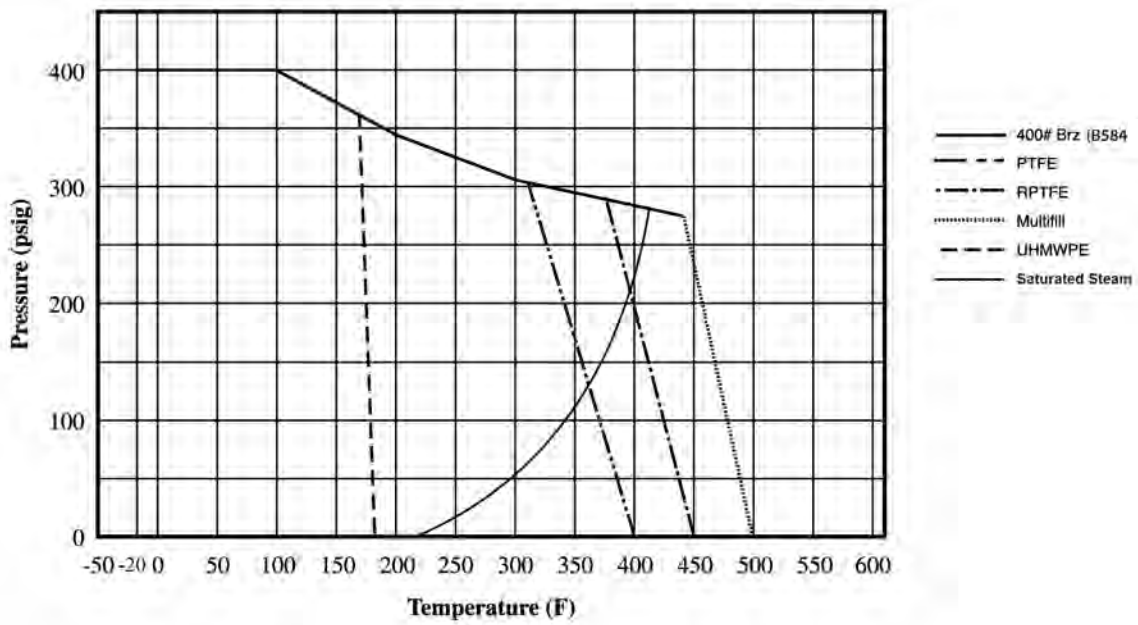

600 CWP BRONZE ASTM B584 GRAPH 4

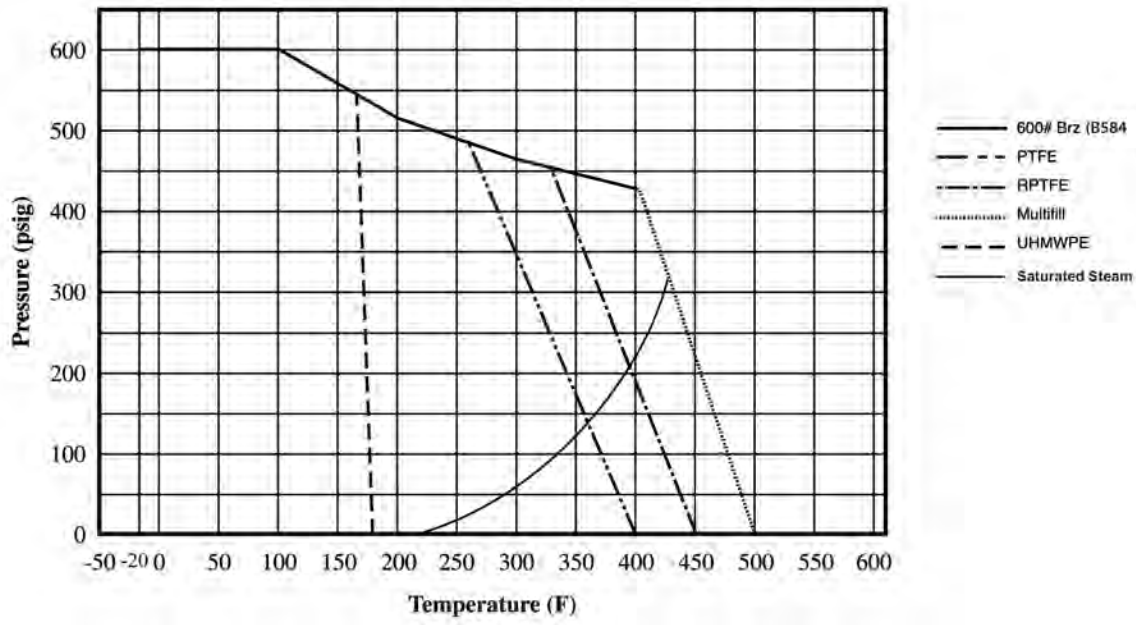

PRESSURE/TEMPERATURE RATINGS

ENGINEERING DATA

CLASS 300 (CS) ASTM A216-WCB GRAPH 5

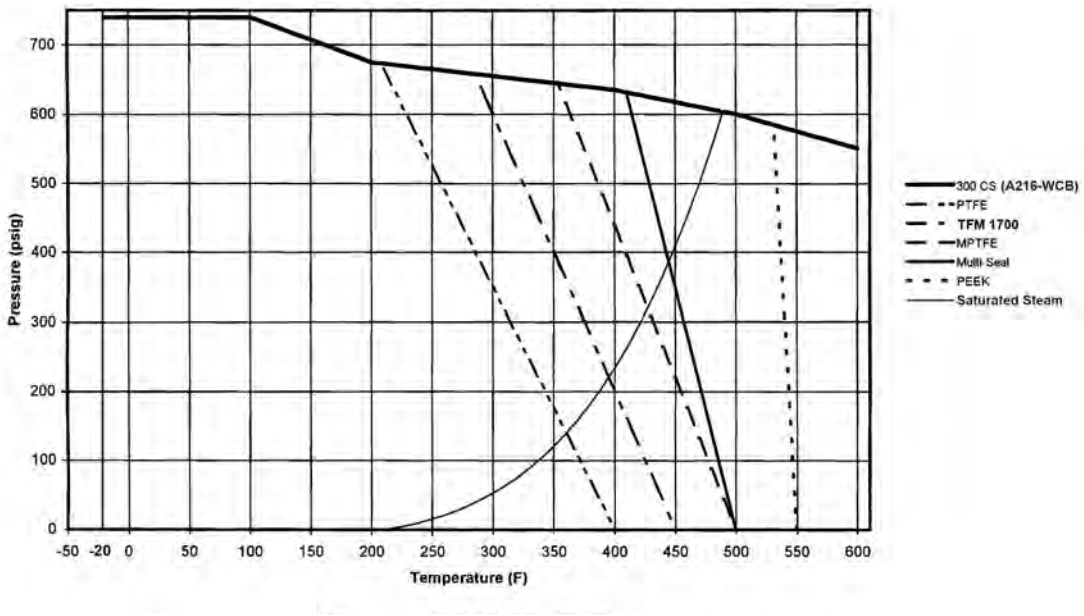

CLASS 300 (SS) ASTM A351-CF8M OR ASTM A351-CF3M GRAPH 6

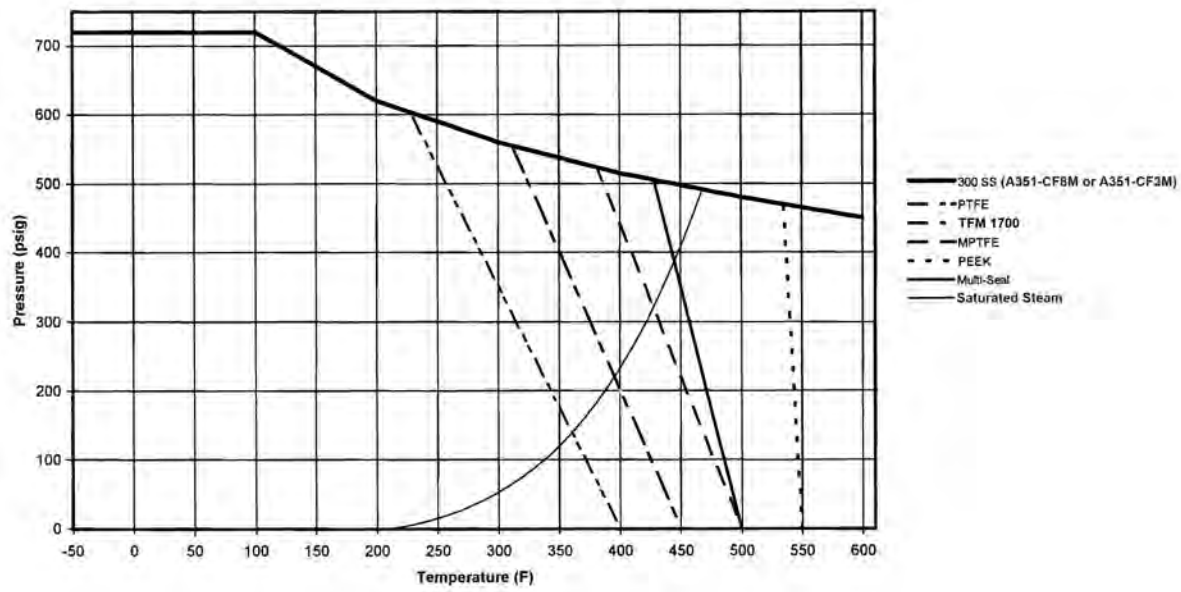

PRESSURE/TEMPERATURE RATINGS

ENGINEERING DATA

1000 CWP (CS) ASTM A216-WCB GRAPH 7

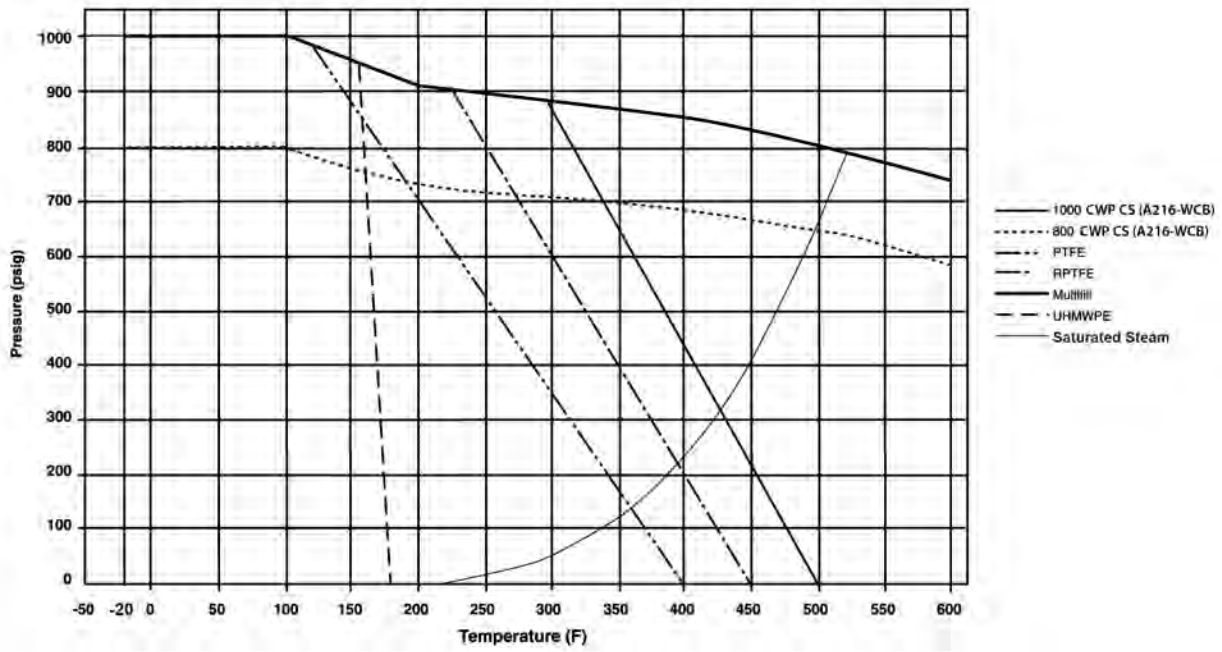

1000 CWP (SS) ASTM A351-CF8M GRAPH 8

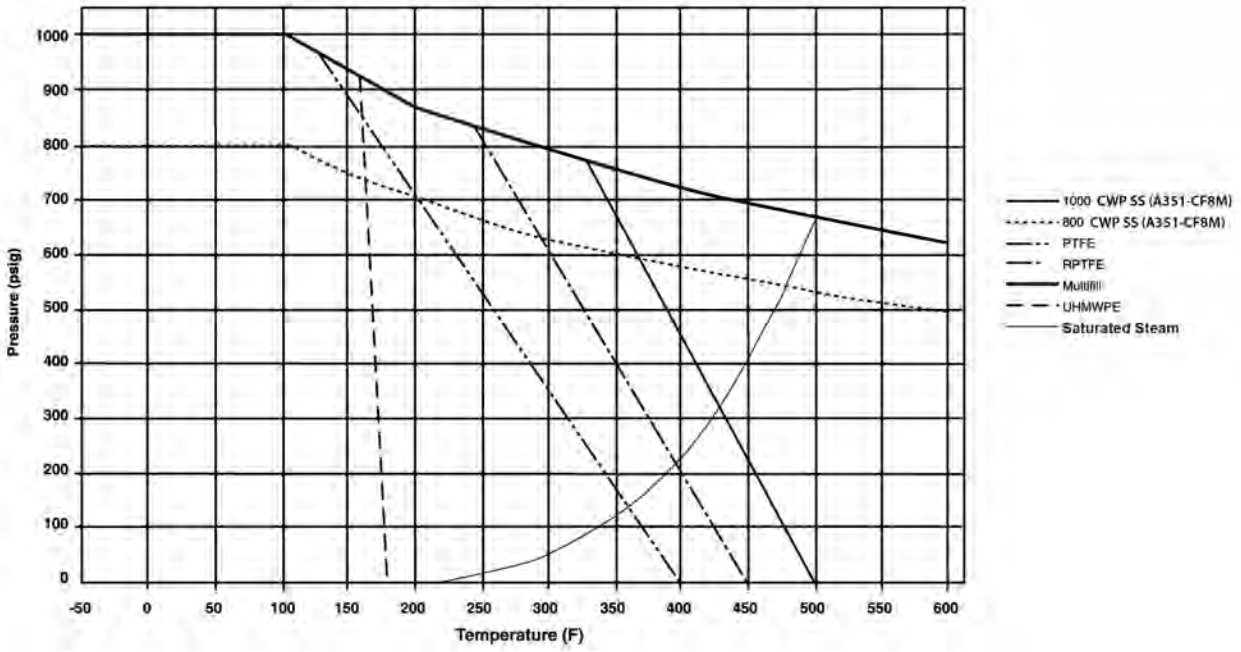

PRESSURE/TEMPERATURE RATINGS

ENGINEERING DATA

1500 CWP (CS) ASTM A216-WCB OR ASTM A105 GRAPH 11

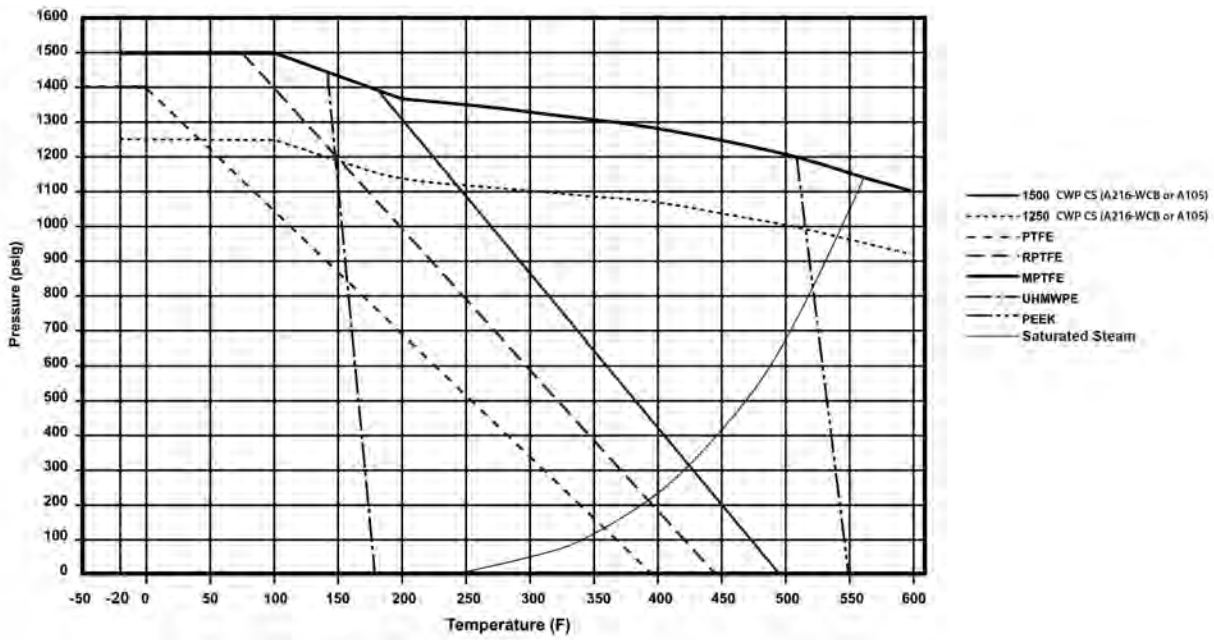

1500 CWP (SS) ASTM A351-CF8M GRAPH 12

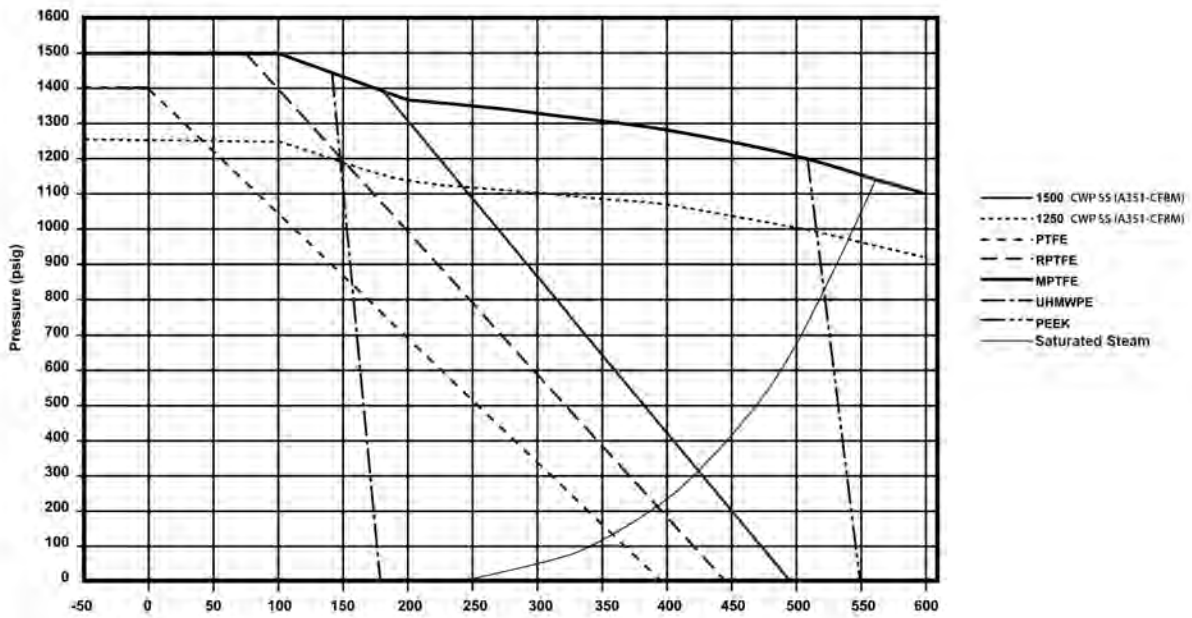

PRESSURE/TEMPERATURE RATINGS

ENGINEERING DATA

2000 CWP (CS) ASTM A216-WCB OR ASTM A105 GRAPH 13

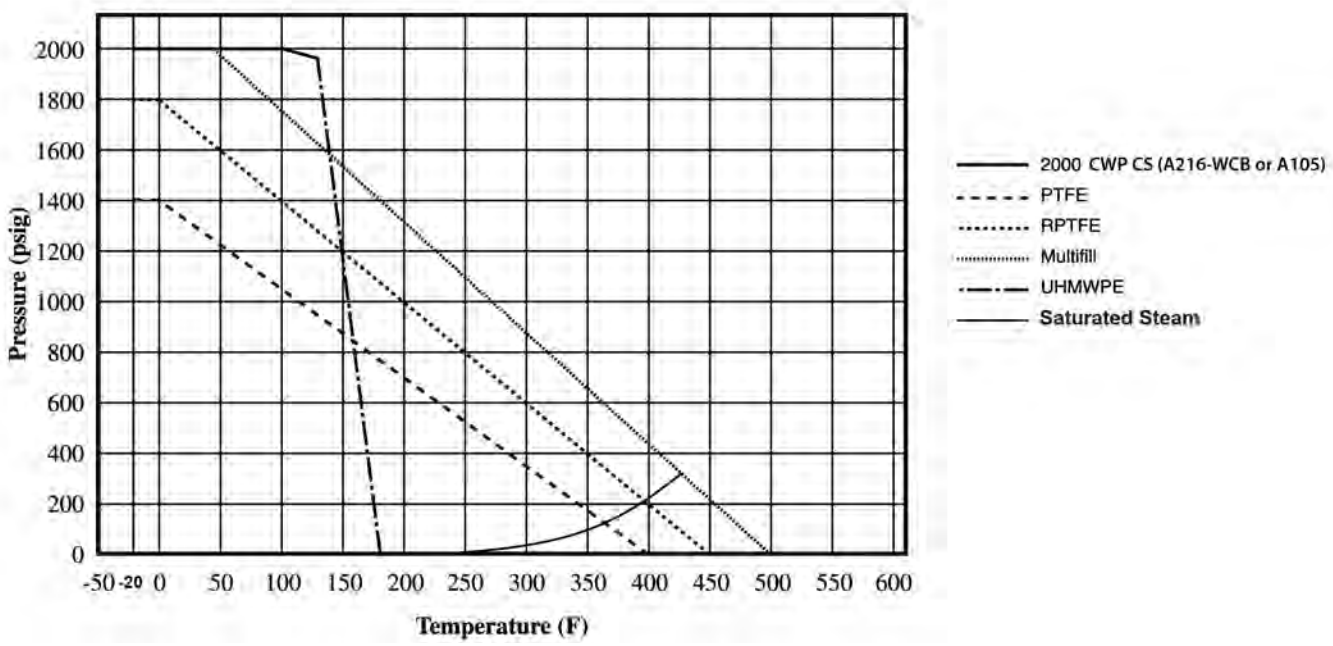

2000 CWP (SS) ASTM A351-CF8M GRAPH 14

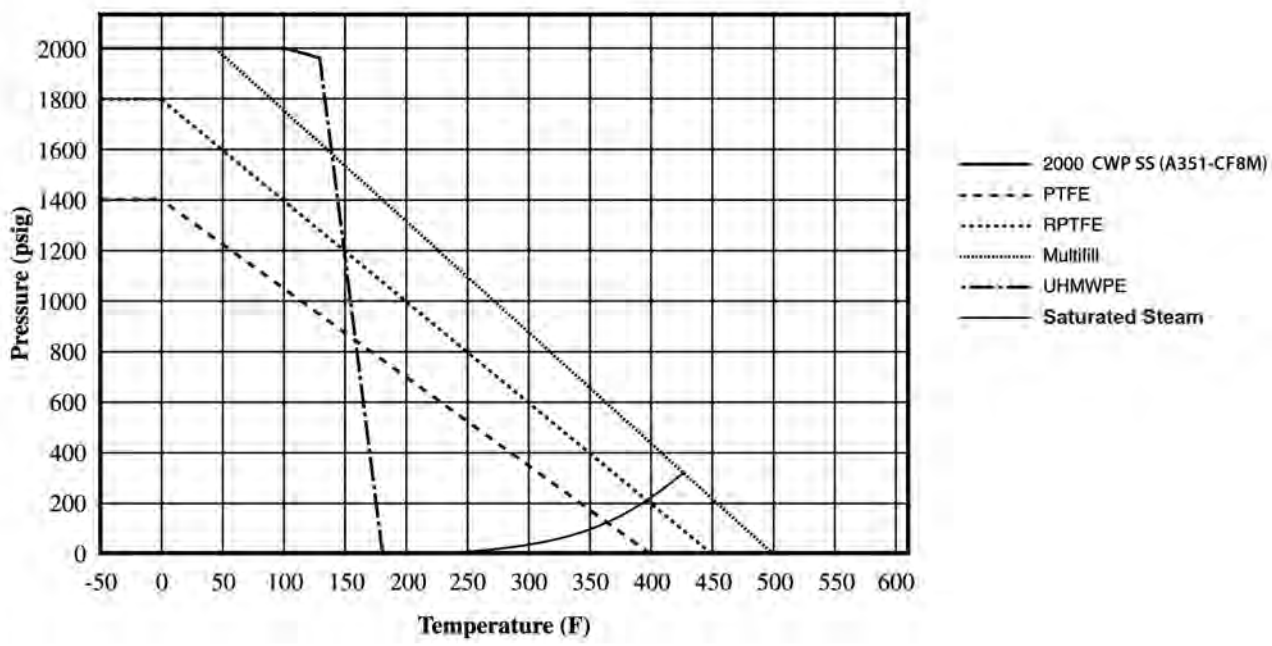

PRESSURE/TEMPERATURE RATINGS

ENGINEERING DATA

3000 CWP (CS) ASTM A216-WCB OR ASTM A105 OR ASTM A108 GRAPH 15

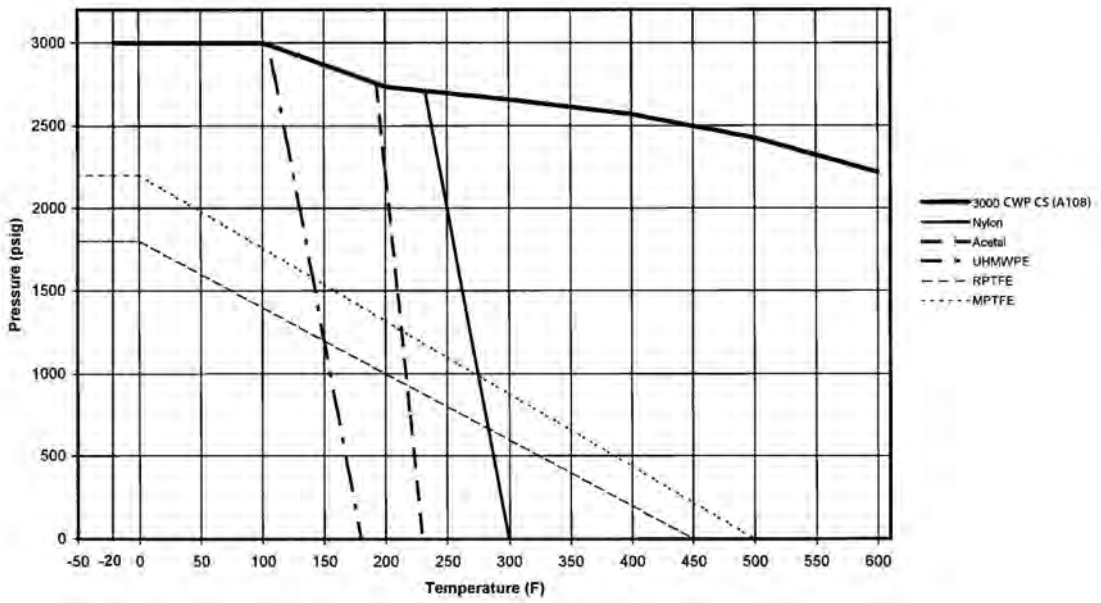

REFRIGERATION VALVE GRAPH 16

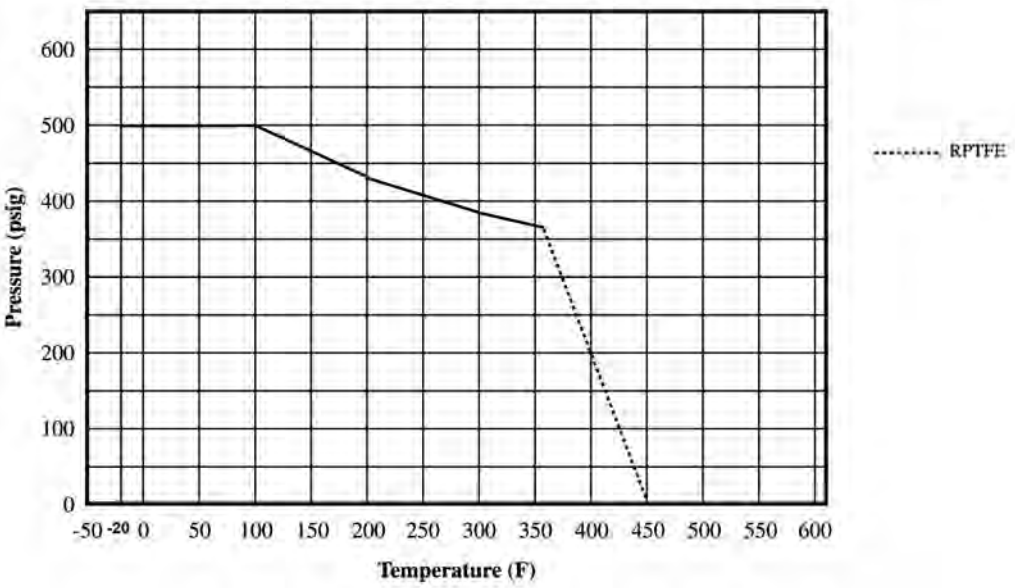

PRESSURE/TEMPERATURE RATINGS

ENGINEERING DATA

400 CWP (CS) ASTM A216-WCB GRAPH 17

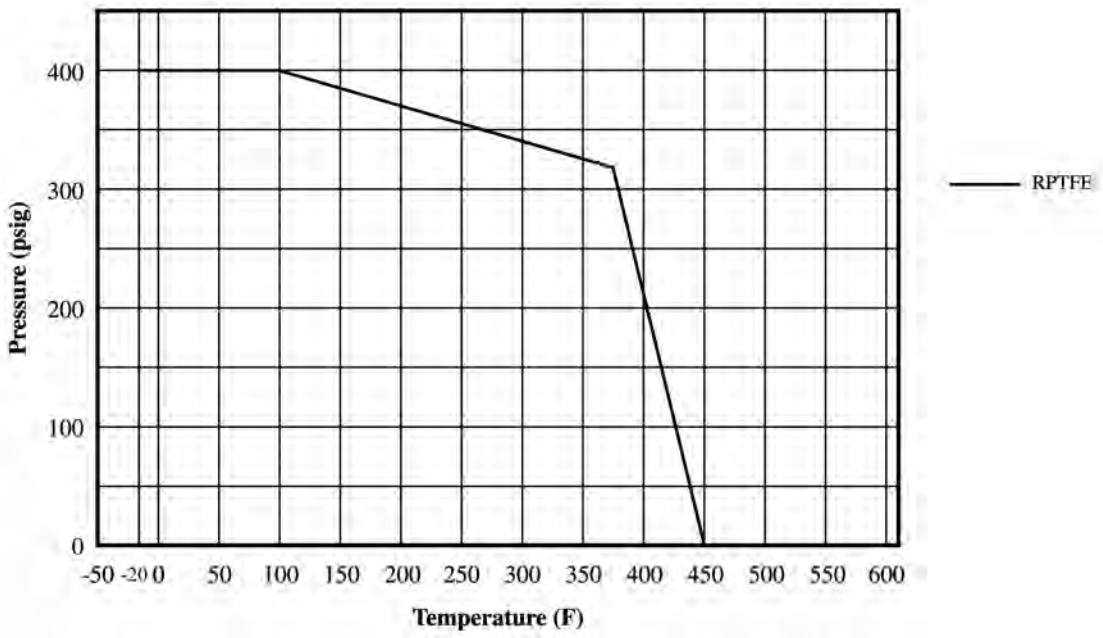

CLASS 150 (ALLOY 20) ASTM A351-CN7M GRAPH 18

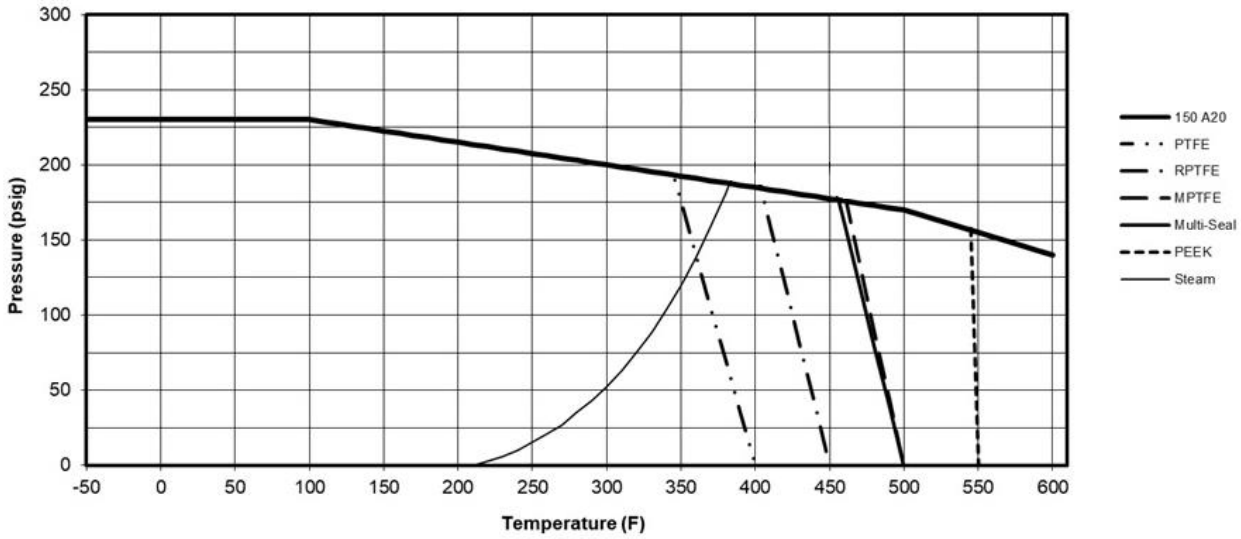

PRESSURE/TEMPERATURE RATINGS

ENGINEERING DATA

1500 CWP (ALLOY 20) ASTM A351-CN7M GRAPH 19

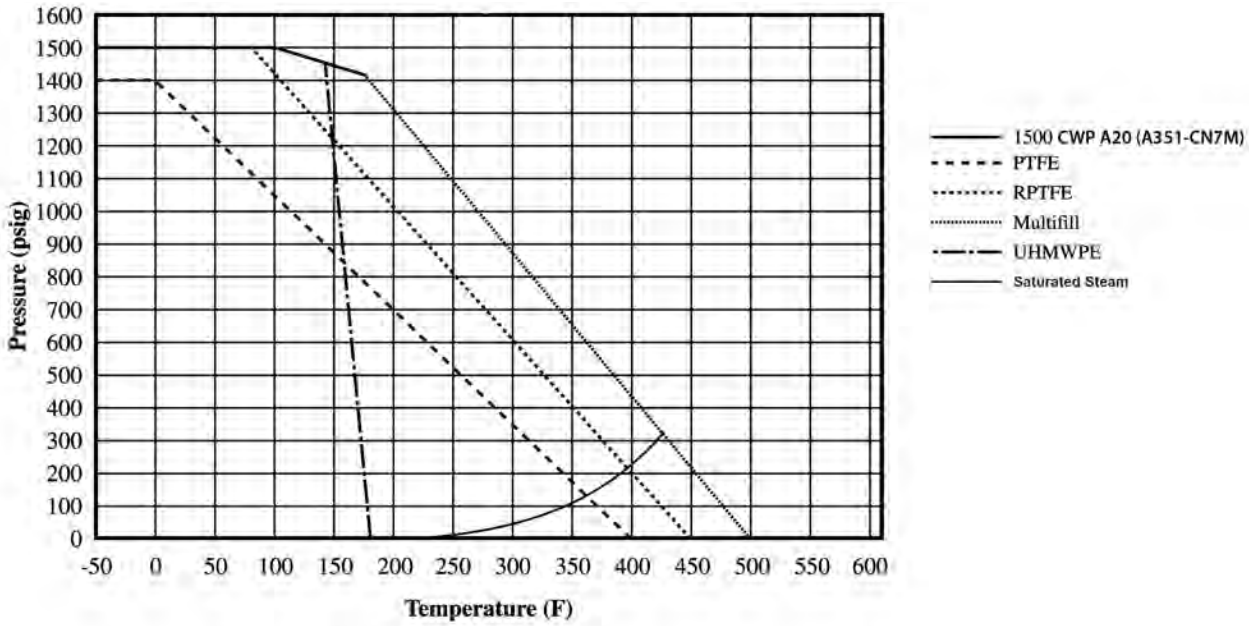

2000 CWP (ALLOY 20) ASTM A351-CN7M GRAPH 20

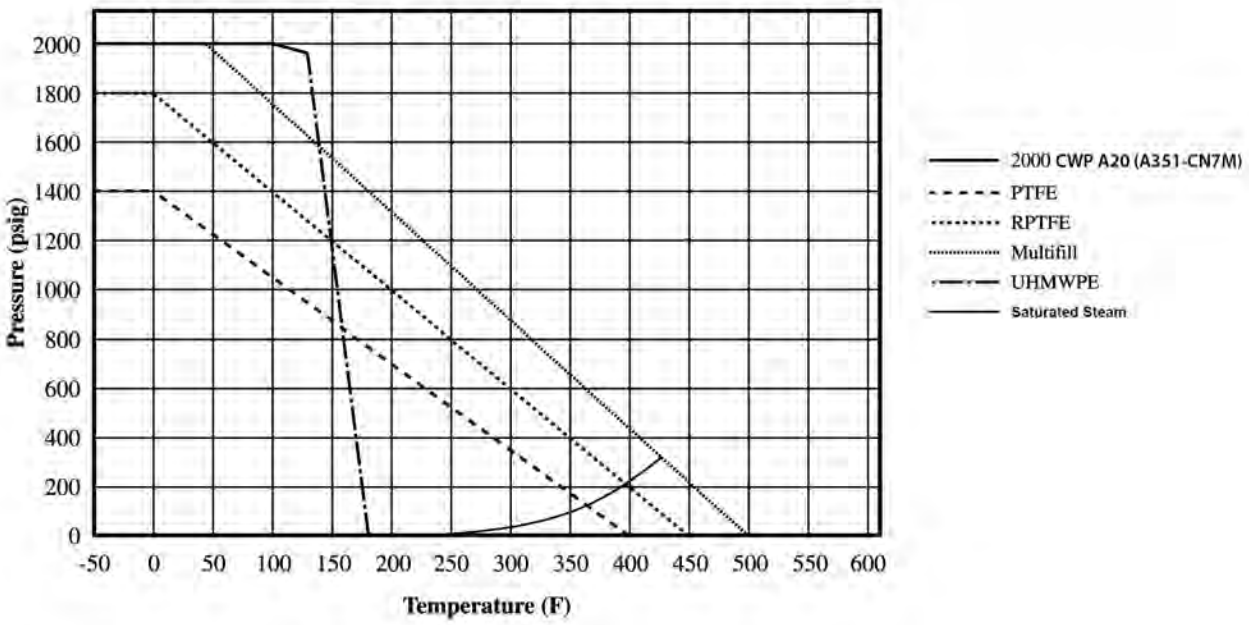

PRESSURE/TEMPERATURE RATINGS

ENGINEERING DATA

800 CWP (SS) ASTM A351-CF8M GRAPH 21

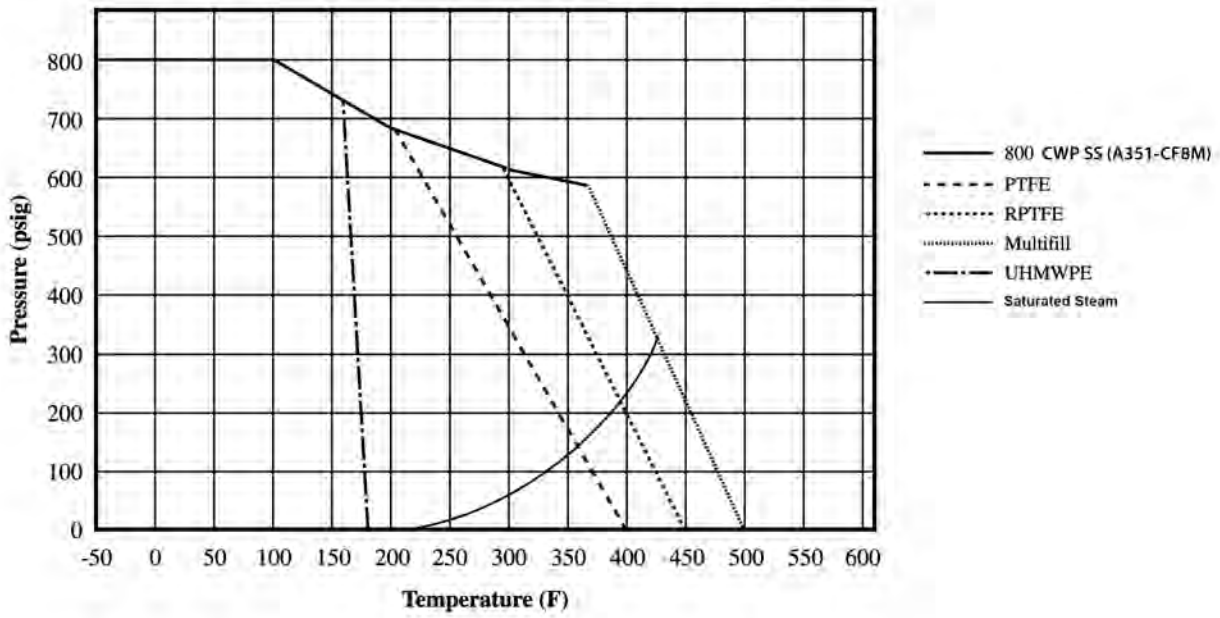

800 CWP (NICKEL) ASTM A494-CZ100 GRAPH 22

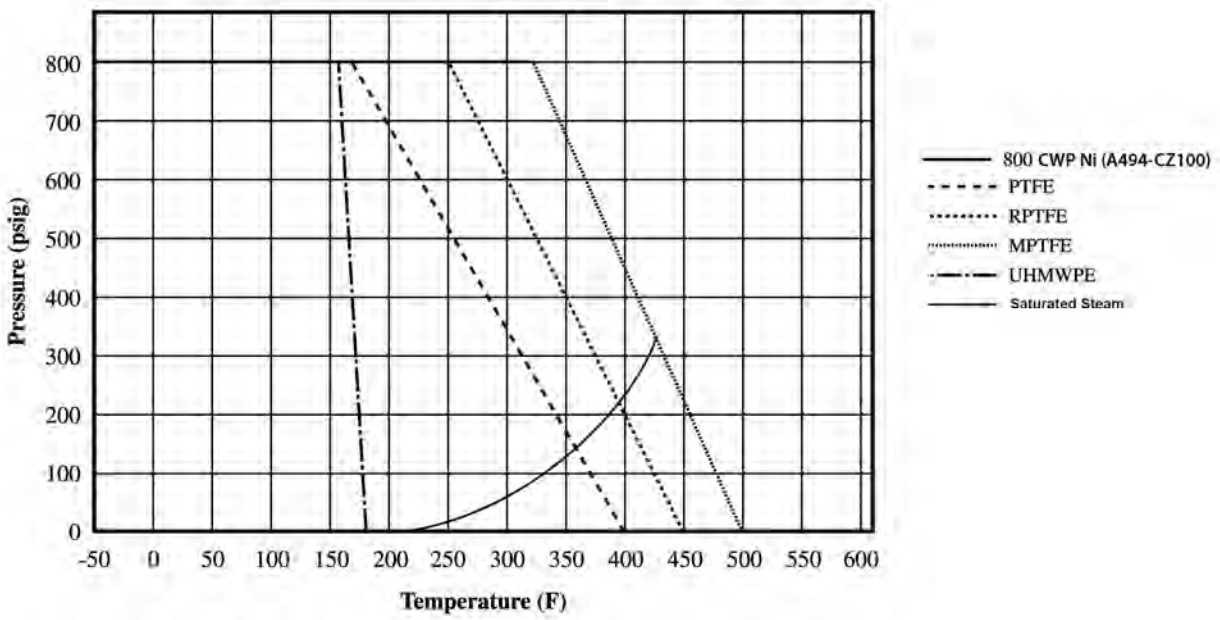

PRESSURE/TEMPERATURE RATINGS

ENGINEERING DATA

1500 CWP (CS) ASTM A216-WCB GRAPH 23

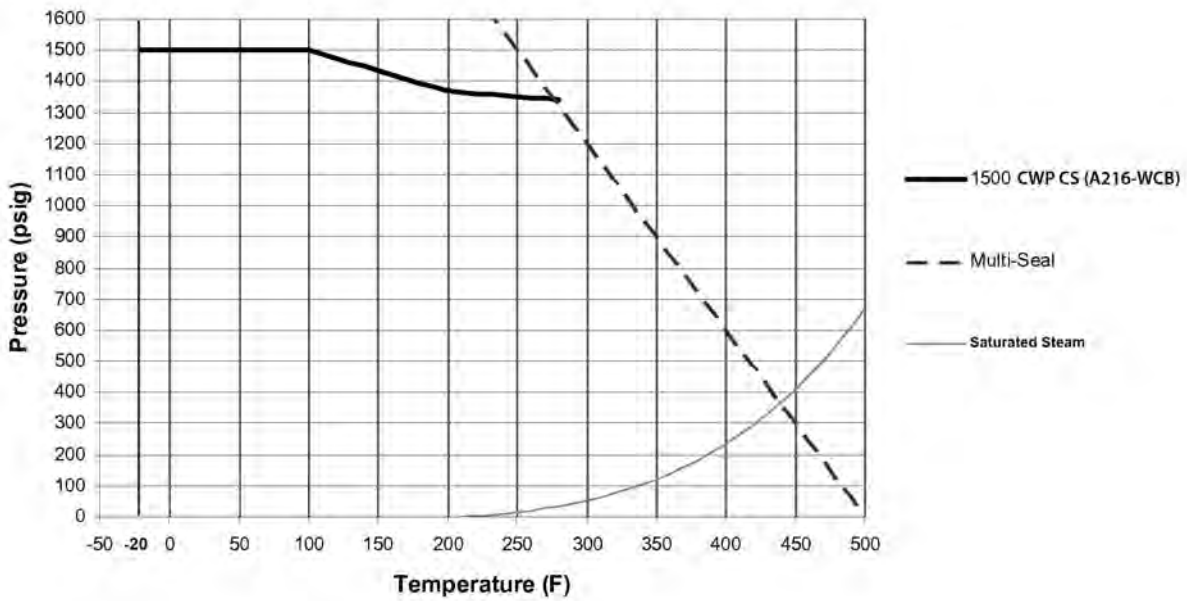

1500 CWP (SS) ASTM A351-CF8M GRAPH 24

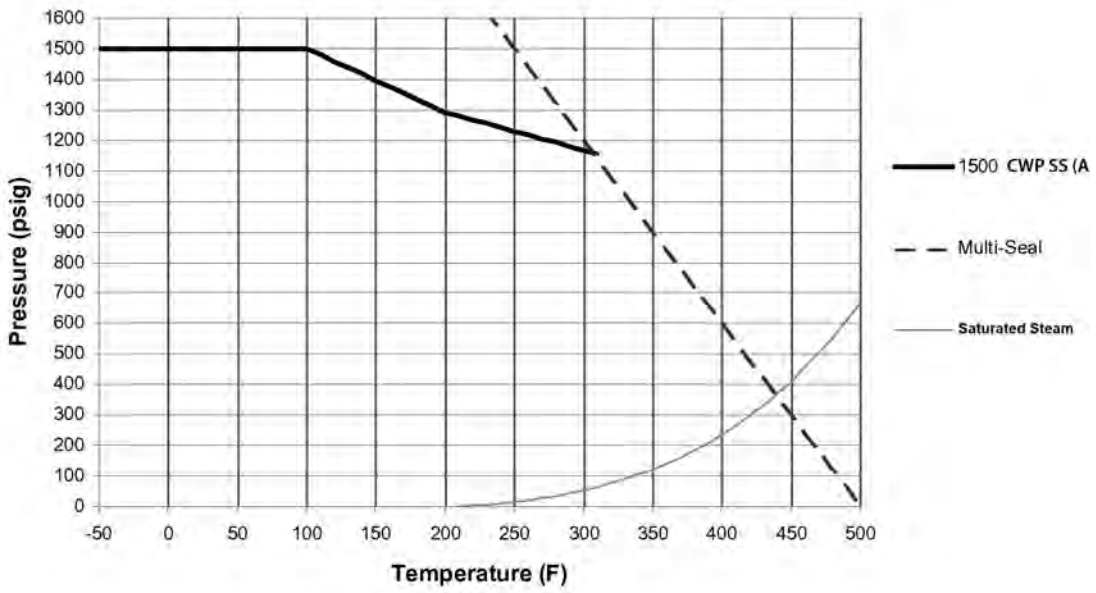

PRESSURE/TEMPERATURE RATINGS

ENGINEERING DATA

ASME CLASS 600 (CS) ASTM A216-WCB GRAPH 25

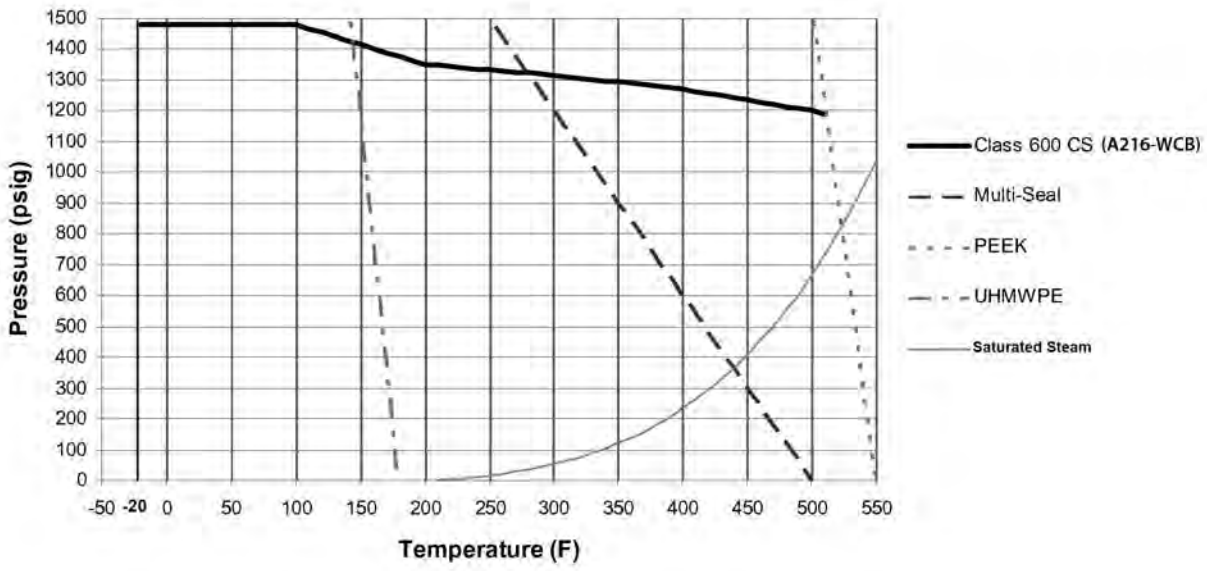

ASME CLASS 600 (SS) ASTM A351-CF8M GRAPH 26

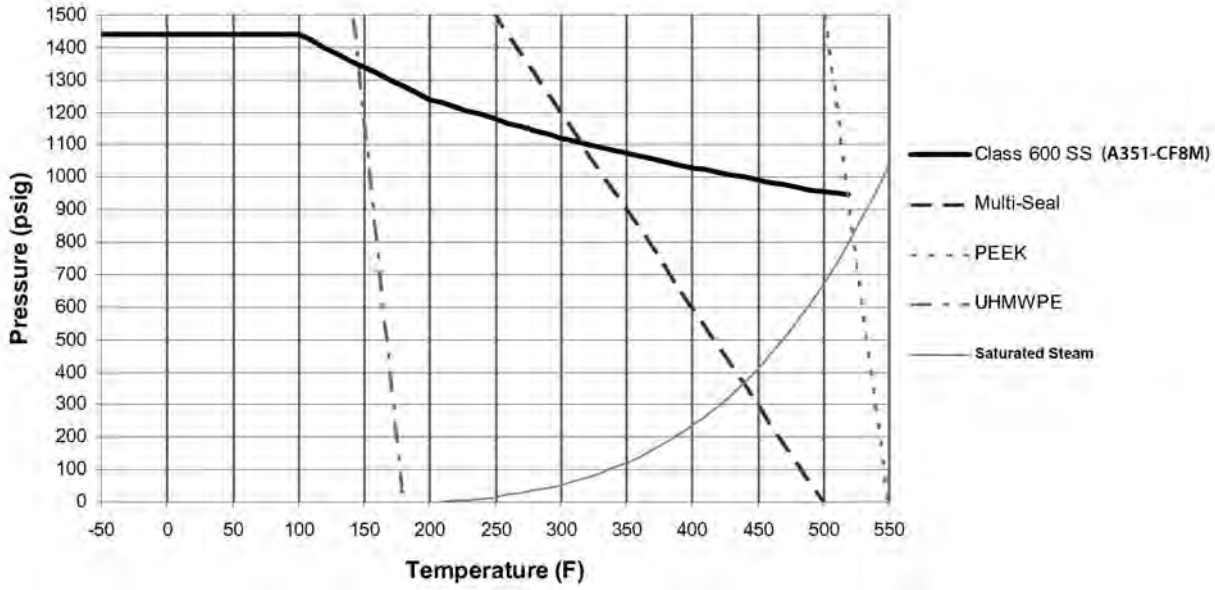

ASME CLASS 600 (ALLOY 20) ASTM A351-CN7M GRAPH 27

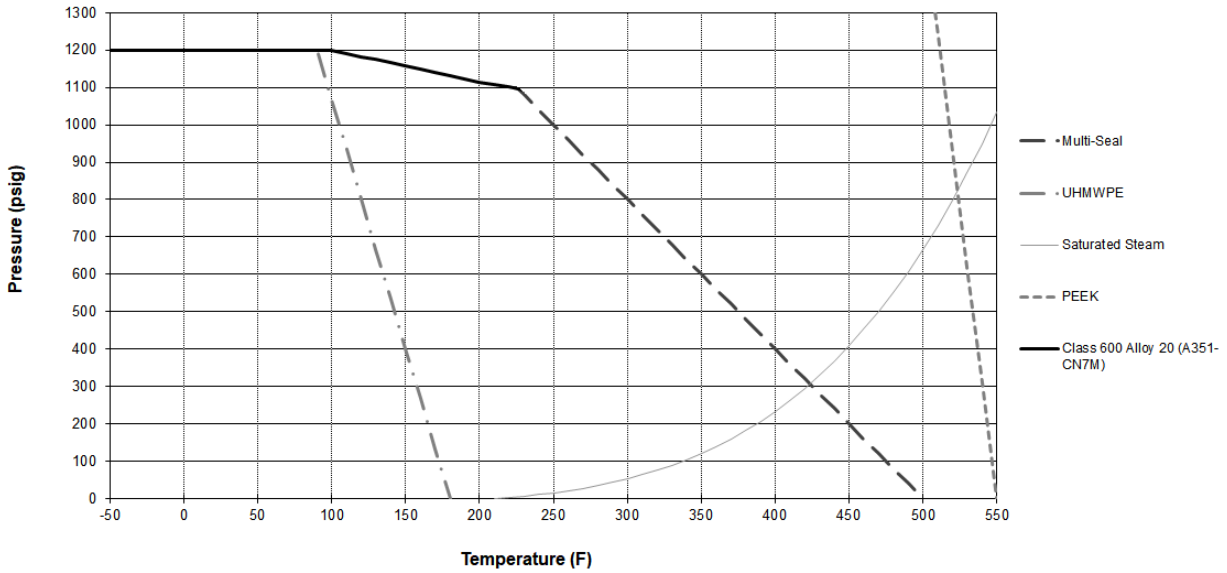

ASME CLASS 600 (HASTELLOY C) ASTM A494-CW12MW GRAPH 28

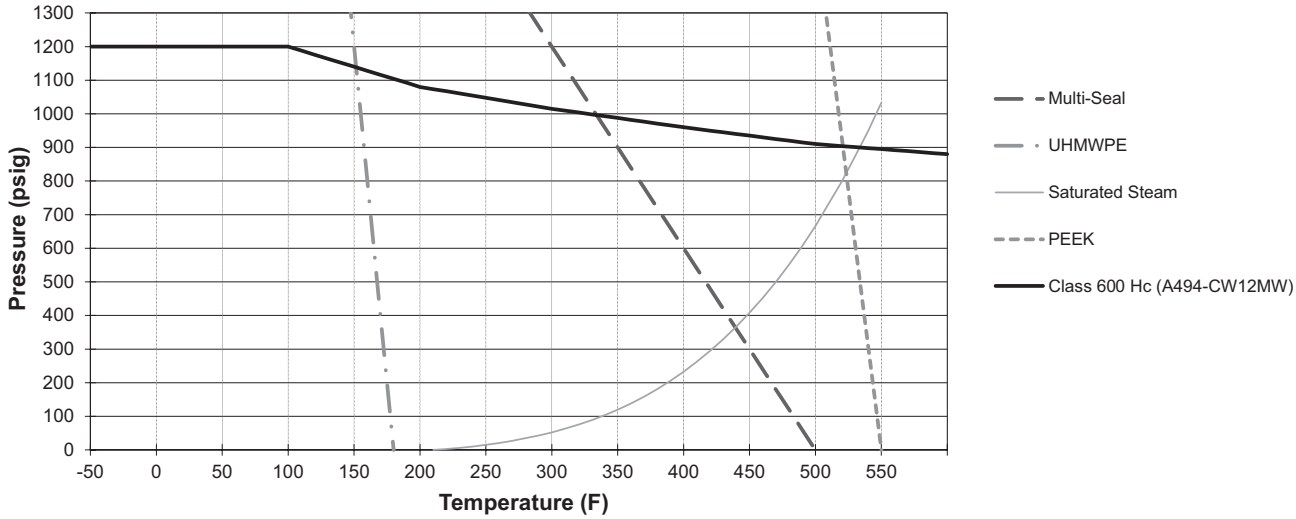

PRESSURE/TEMPERATURE RATINGS

ENGINEERING DATA

60A METAL SEATED, GLOBE PATTERN VEE-TIP, NEEDLE VALVES GRAPH 29

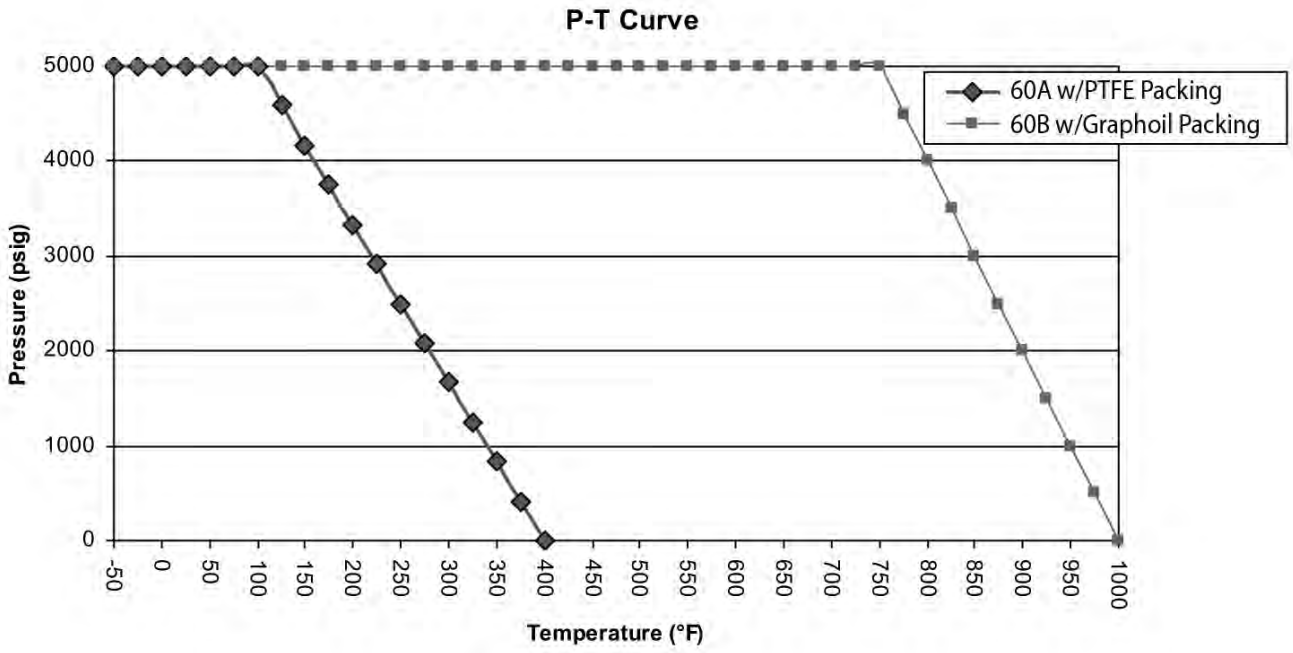

60B METAL SEATED, GLOBE PATTERN VEE-TIP, NEEDLE VALVES GRAPH 30

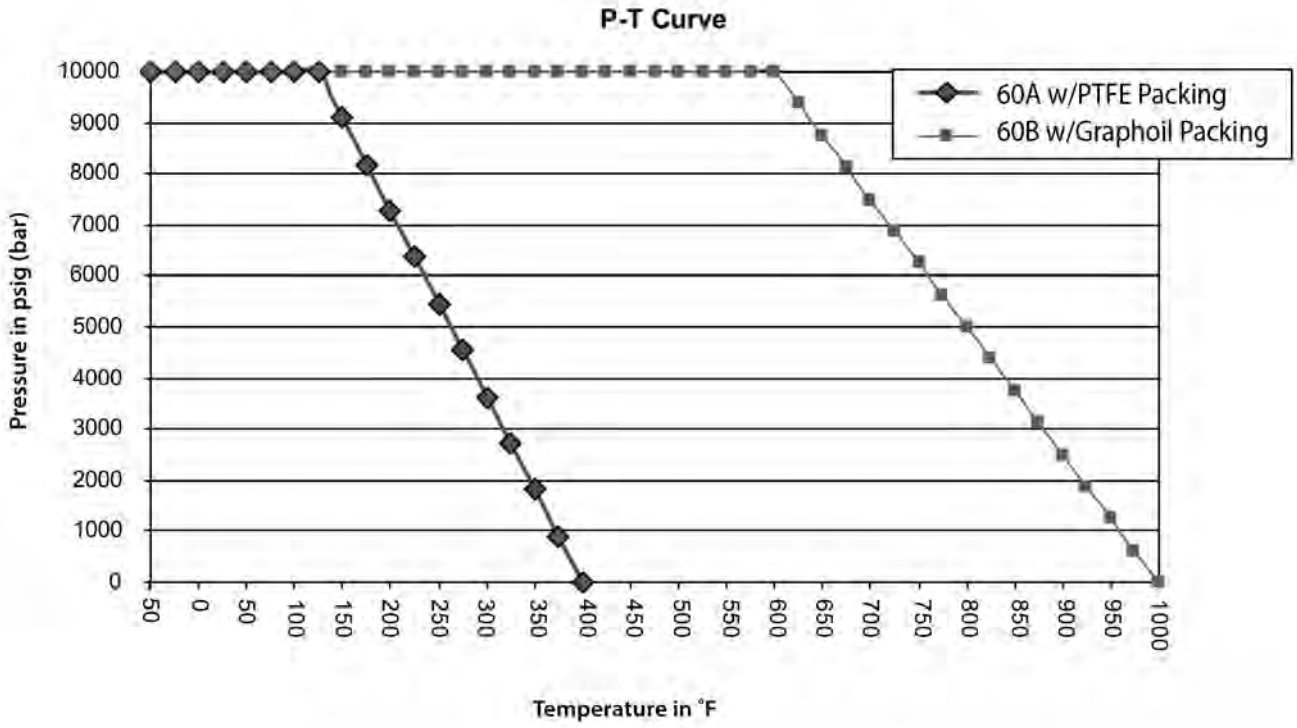

PRESSURE/TEMPERATURE RATINGS

ENGINEERING DATA

CLASS 150 (CS) ASTM A352-LCC GRAPH 31

STEEL CASTINGS FOR LOW TEMPERATURE SERVICE.

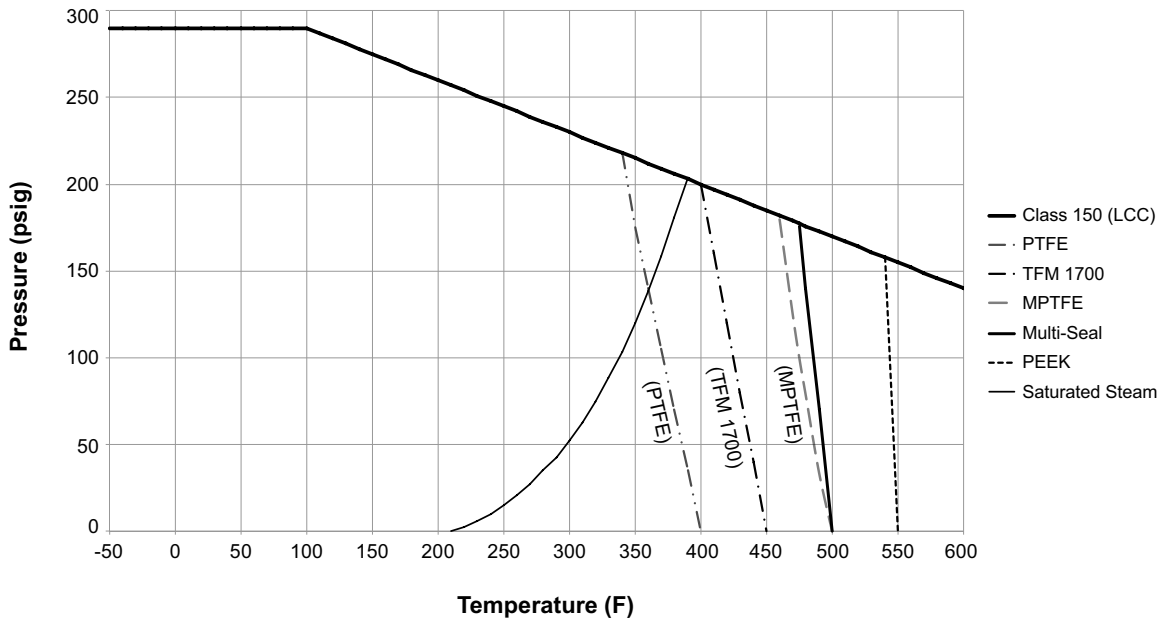

CLASS 300 (CS) ASTM A352-LCC GRAPH 32

STEEL CASTINGS FOR LOW TEMPERATURE SERVICE.

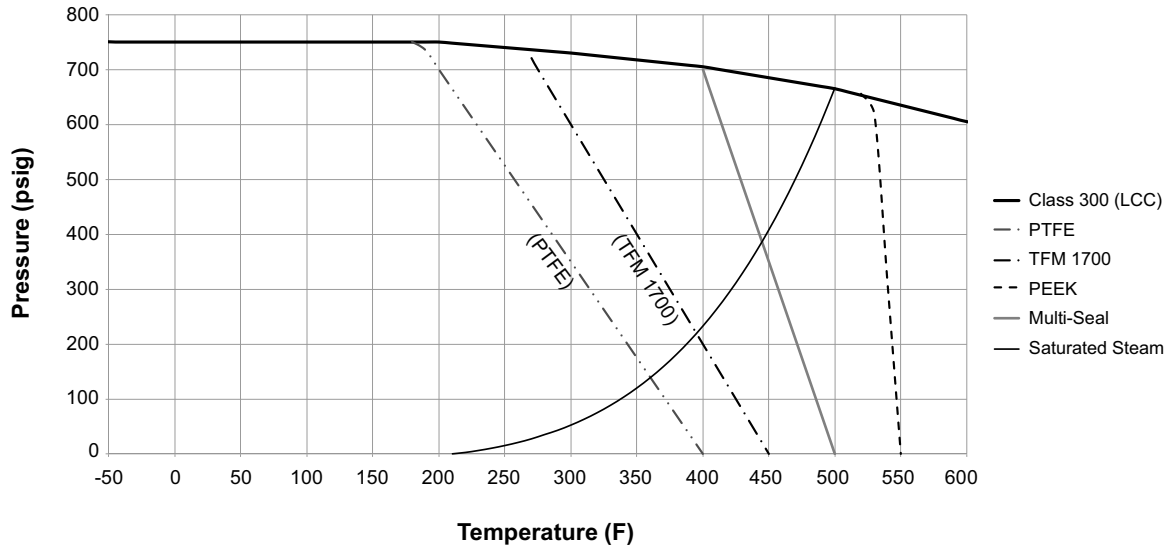

PRESSURE/TEMPERATURE RATINGS

ENGINEERING DATA

CLASS 600 ASTM A352-LCC GRAPH 33

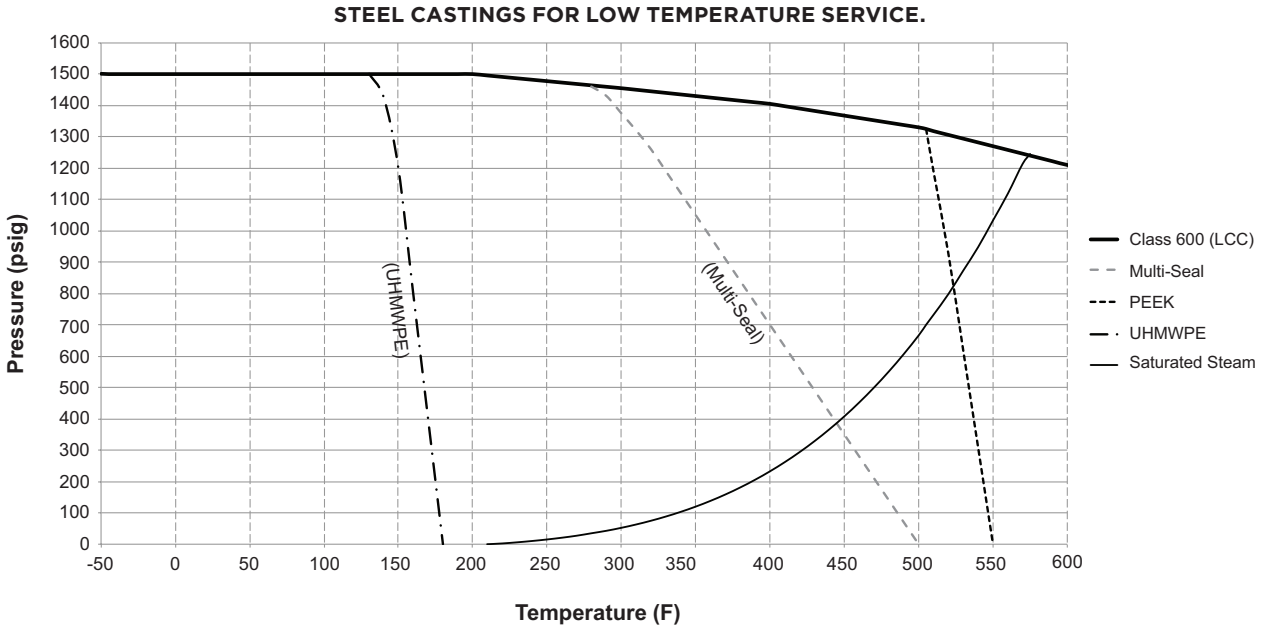

aalberts integrated piping systems

PRESSURE/TEMPERATURE RATINGS

ENGINEERING DATA

CLASS 600 (SS) ASTM A351-CF8M & (CS) ASTM A216-WCB : 1" - 2" GRAPH 34

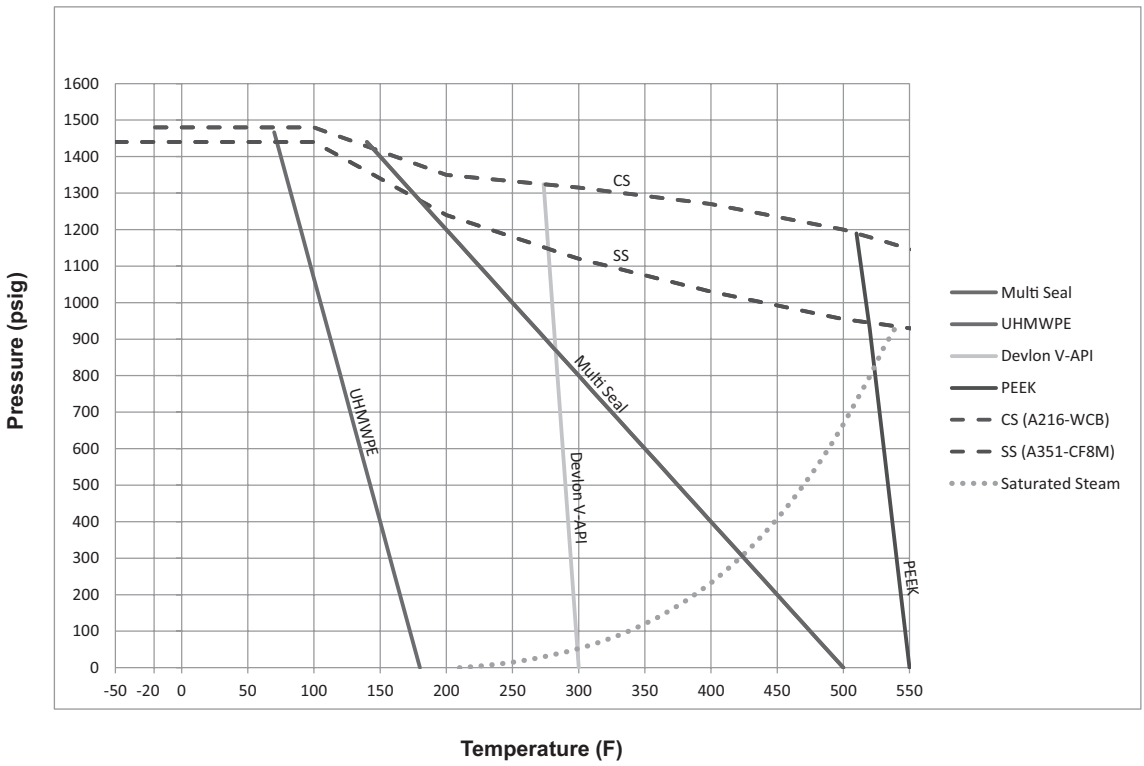

CLASS 600 (SS) ASTM A351-CF8M & (CS) ASTM A216-WCB : 2.5" - 4" GRAPH 35

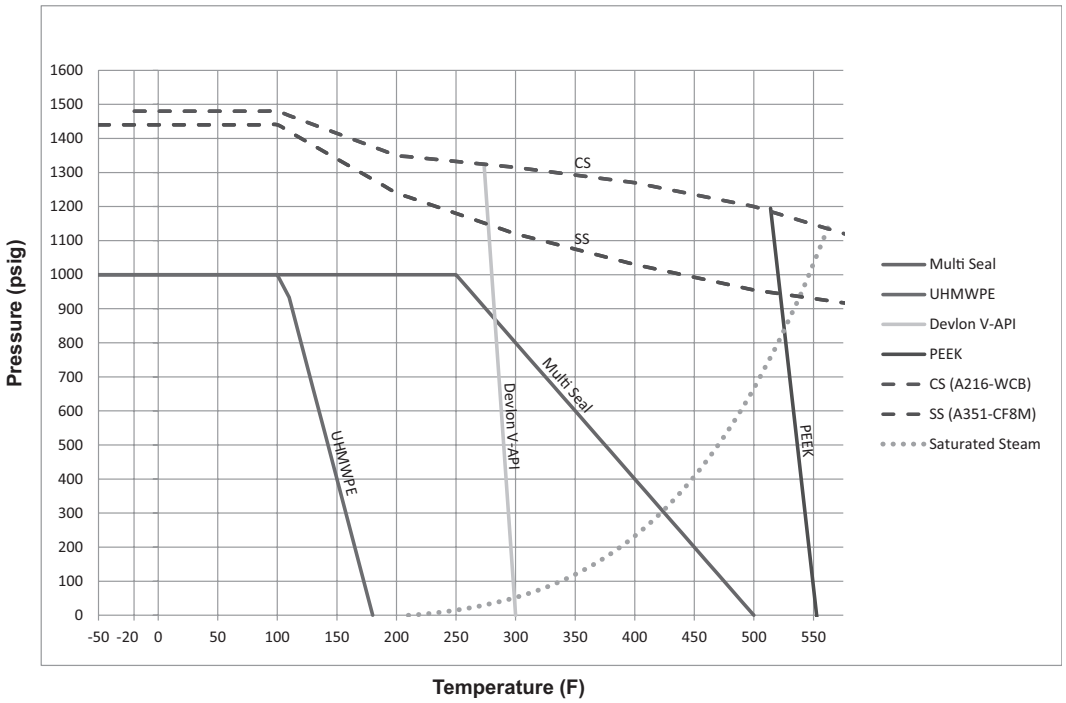

CLASS 600 (SS) ASTM A351-CF8M & (CS) ASTM A216-WCB : 6" & 8" GRAPH 36

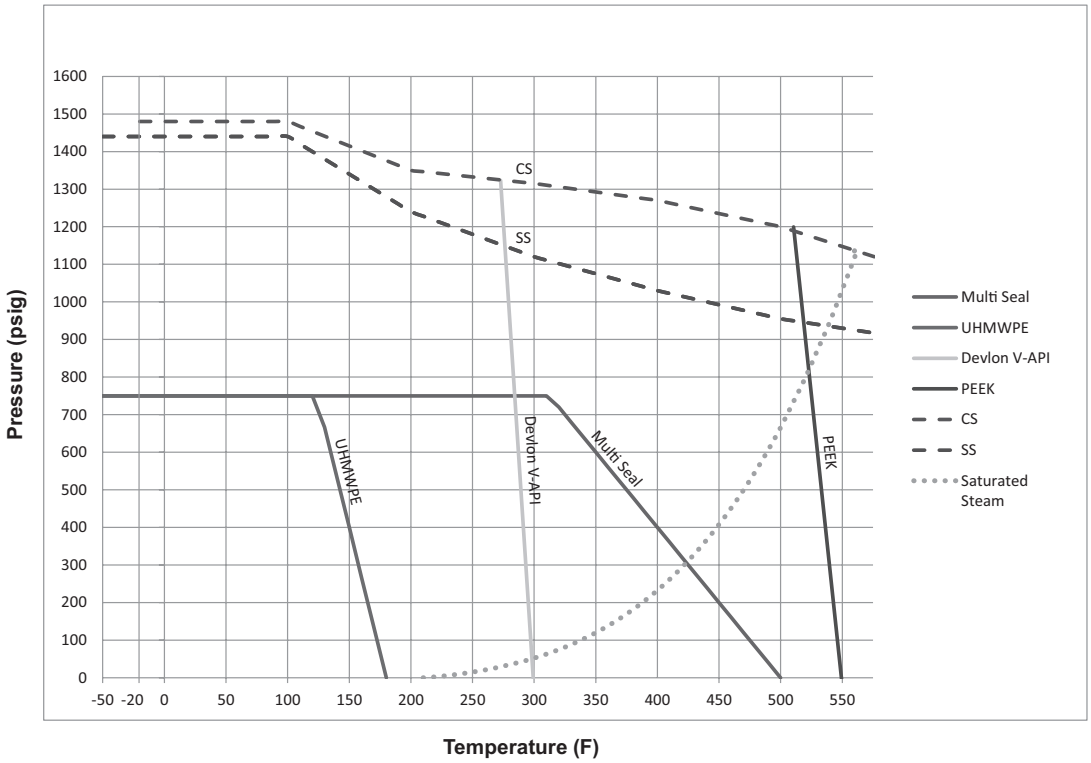

CLASS 600 ASTM A352-LCC : 1" THRU 2" GRAPH 37

STEEL CASTINGS FOR LOW TEMPERATURE SERVICE.

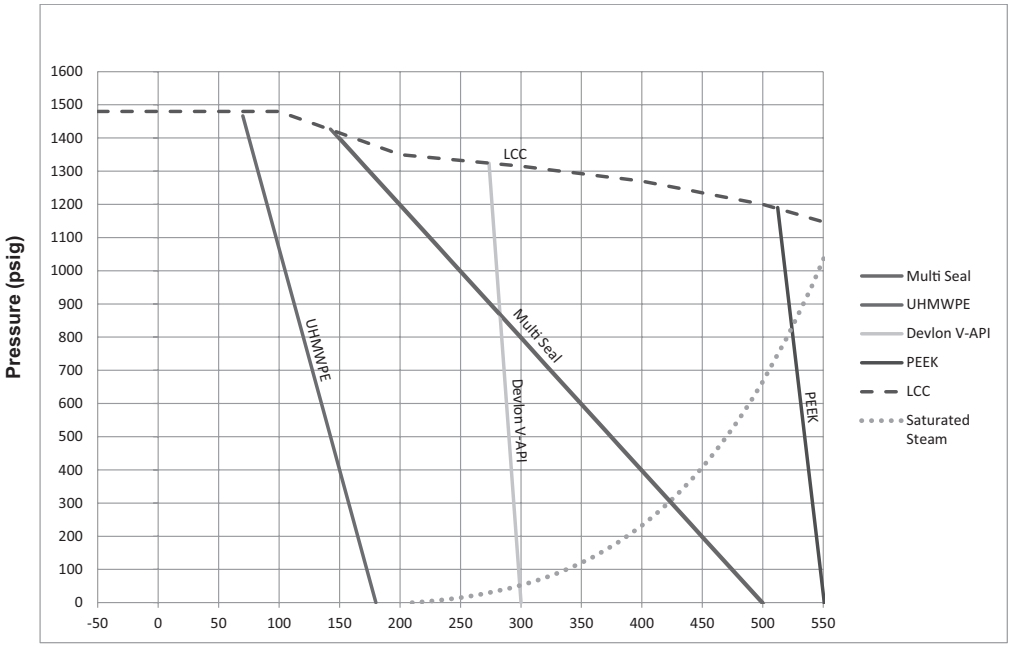

PRESSURE/TEMPERATURE RATINGS

ENGINEERING DATA

CLASS 600 (CS) ASTM A352-LCC : 2.5" THRU 4" GRAPH 38

STEEL CASTINGS FOR LOW TEMPERATURE SERVICE.

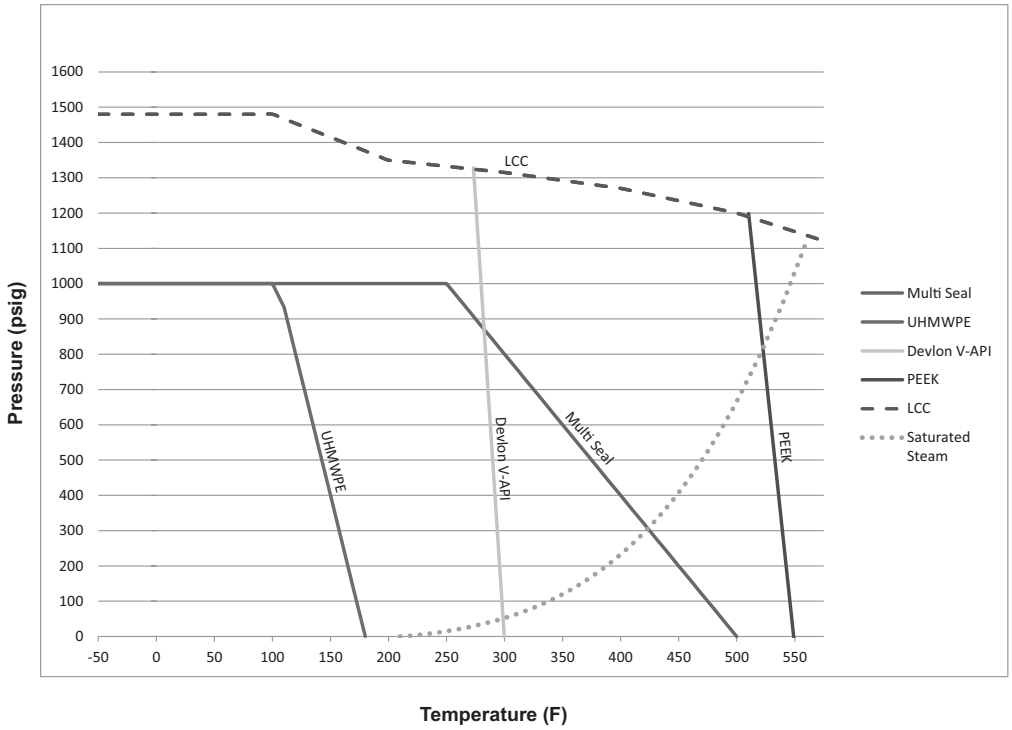

CLASS 600 (CS) ASTM A352-LCC : 6" & 8" GRAPH 39

STEEL CASTINGS FOR LOW TEMPERATURE SERVICE.

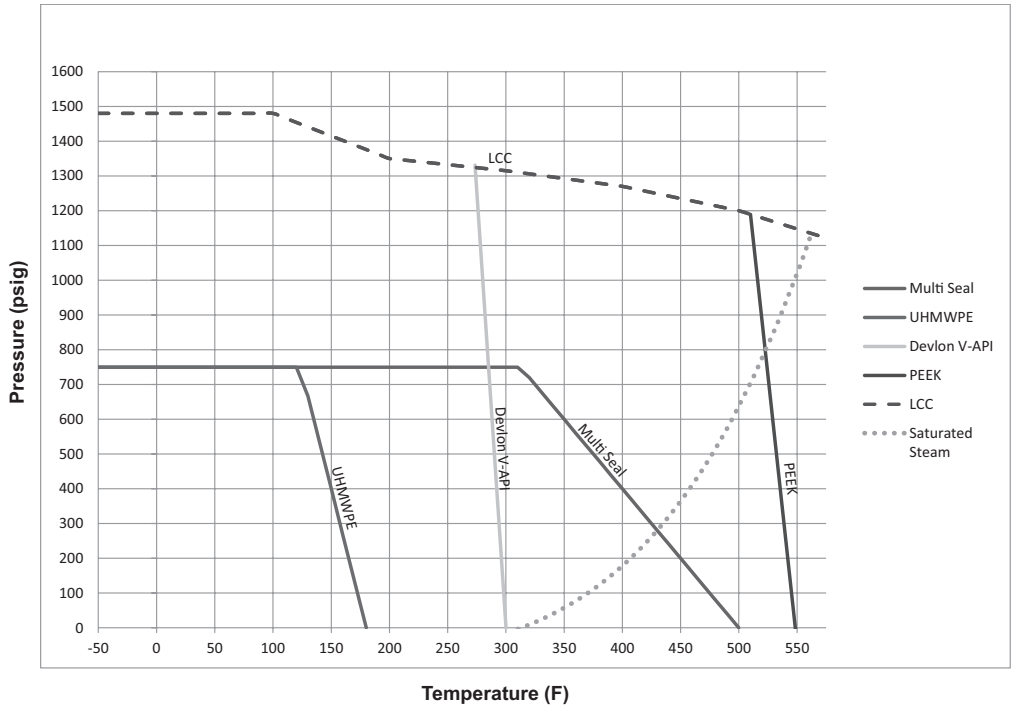

PRESSURE/TEMPERATURE RATINGS

ENGINEERING DATA

CLASS 150 (DUPLEX) ASTM A995-CD3MN & (SUPER DUPLEX) CD3MWCuN GRAPH 40

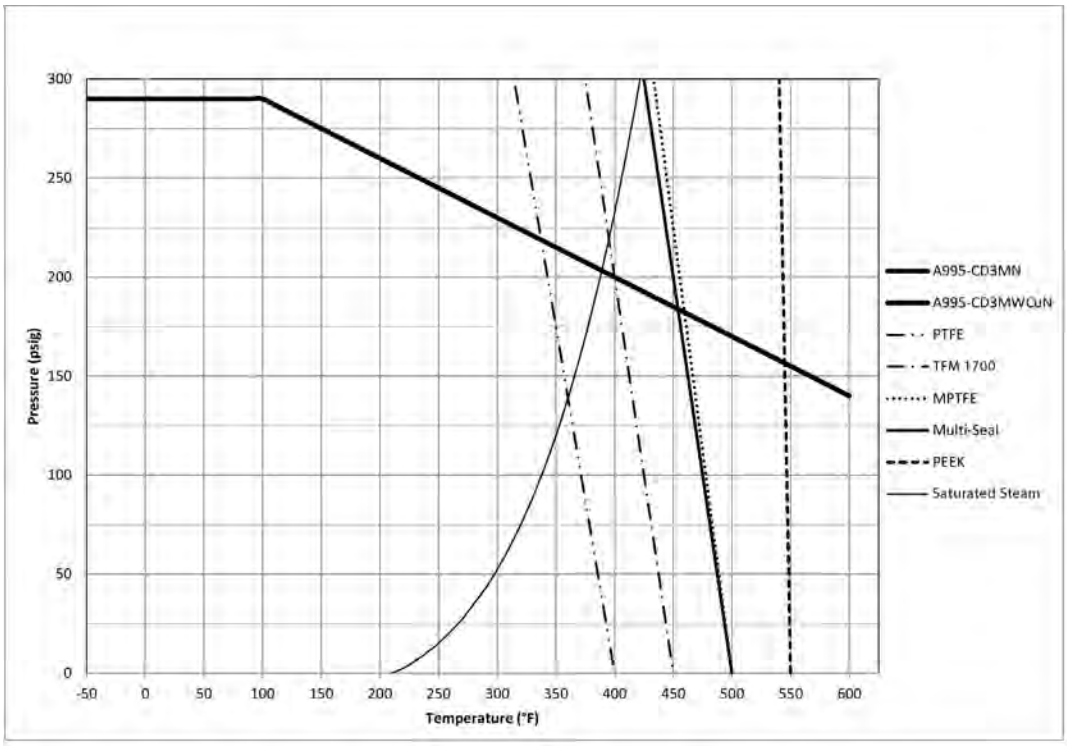

CLASS 300 (DUPLEX) ASTM A995-CD3MN & (SUPER DUPLEX) CD3MWCuN GRAPH 41

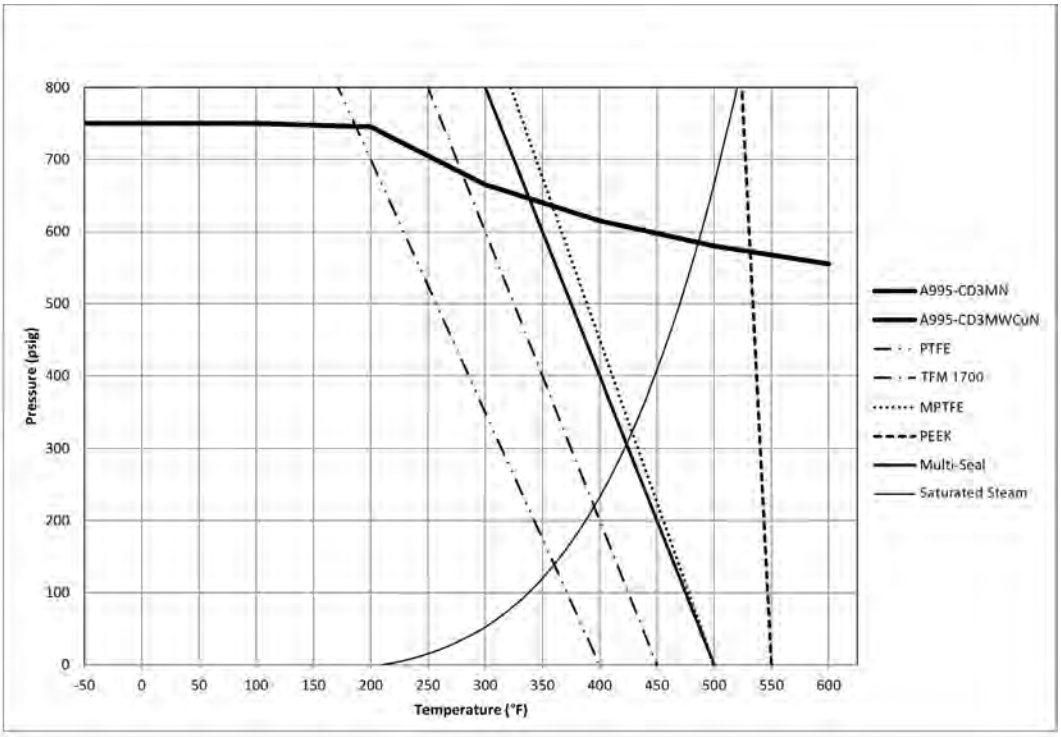

PRESSURE/TEMPERATURE RATINGS

ENGINEERING DATA

CLASS 600 (DUPLEX) ASTM A995-CD3MN & (SUPER DUPLEX) CD3MWCuN GRAPH 42

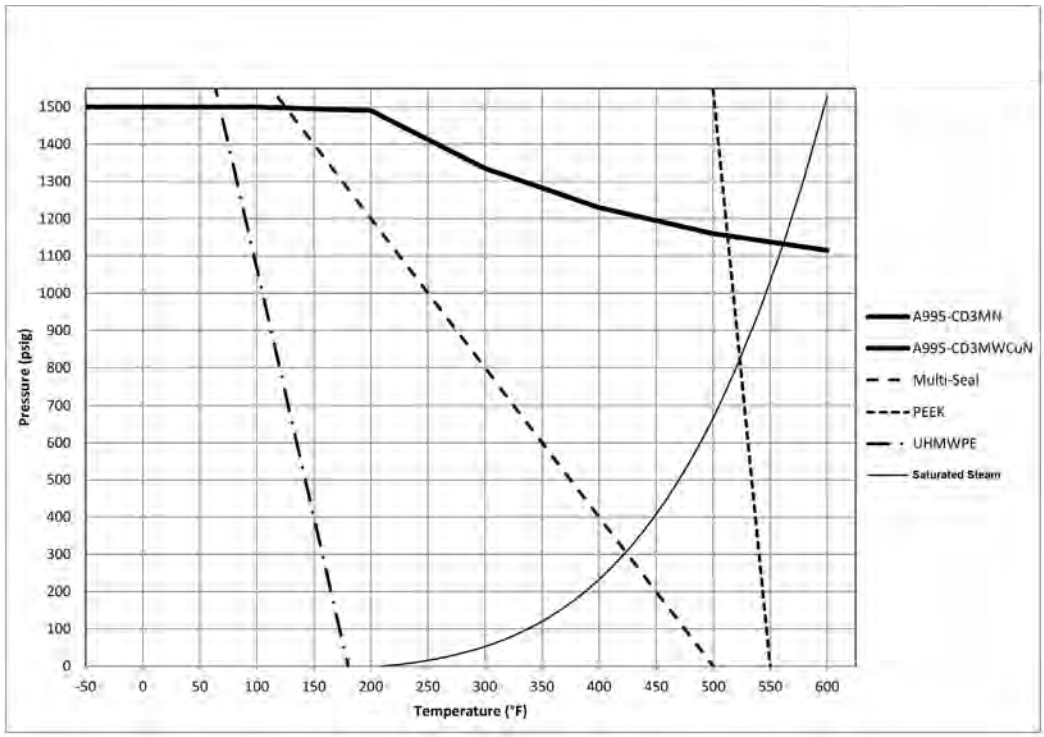

2000 CWP (DUPLEX) ASTM A995-CD3MN & (SUPER DUPLEX) CD3MWCuN GRAPH 43

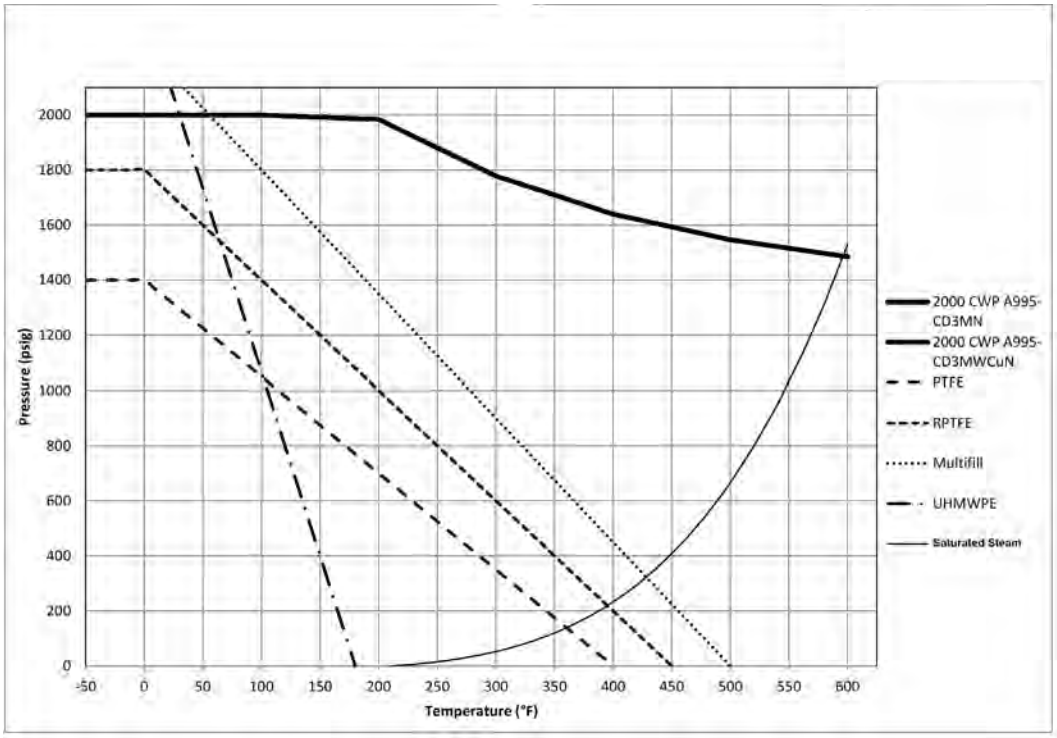

1500 CWP (DUPLEX) ASTM A995-CD3MN & (SUPER DUPLEX) CD3MWCuN GRAPH 44

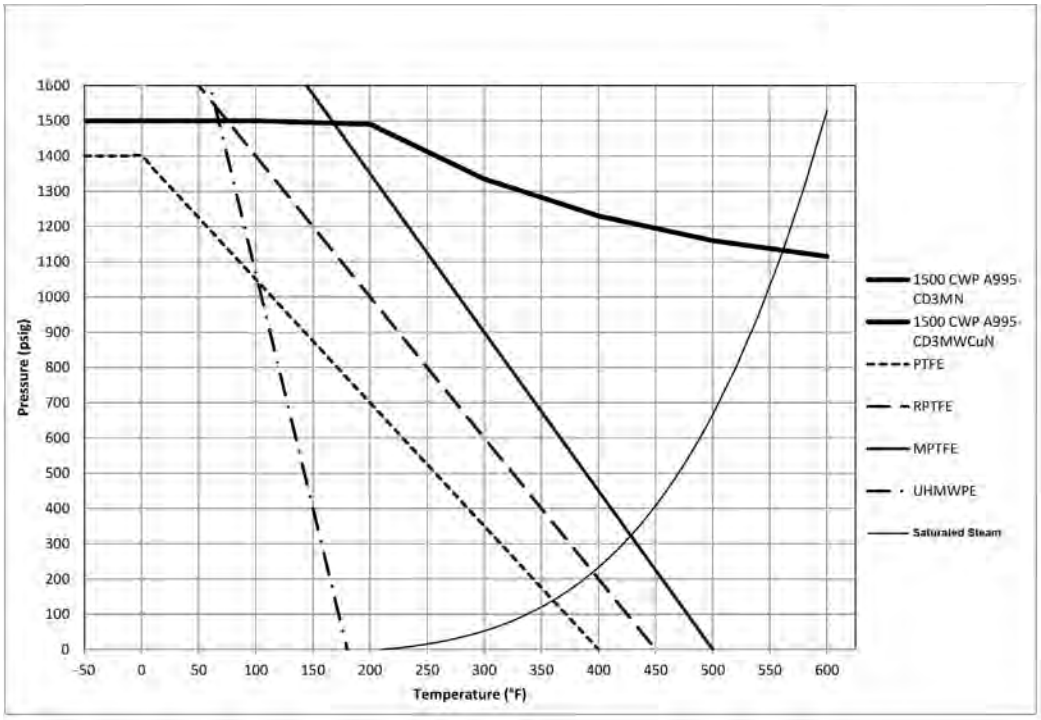

1000 CWP (DUPLEX) ASTM A995-CD3MN & (SUPER DUPLEX) CD3MWCuN GRAPH 45

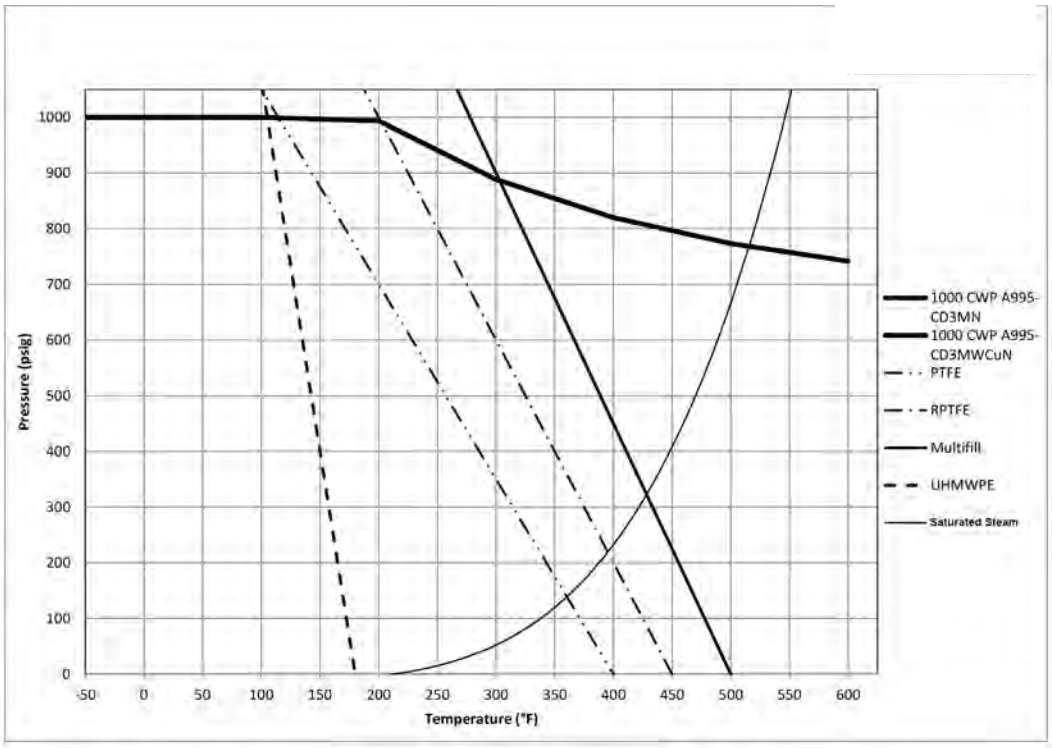

PRESSURE/TEMPERATURE RATINGS

ENGINEERING DATA

ASME CLASS 600 (SS) ASTM A351-CF3 GRAPH 46

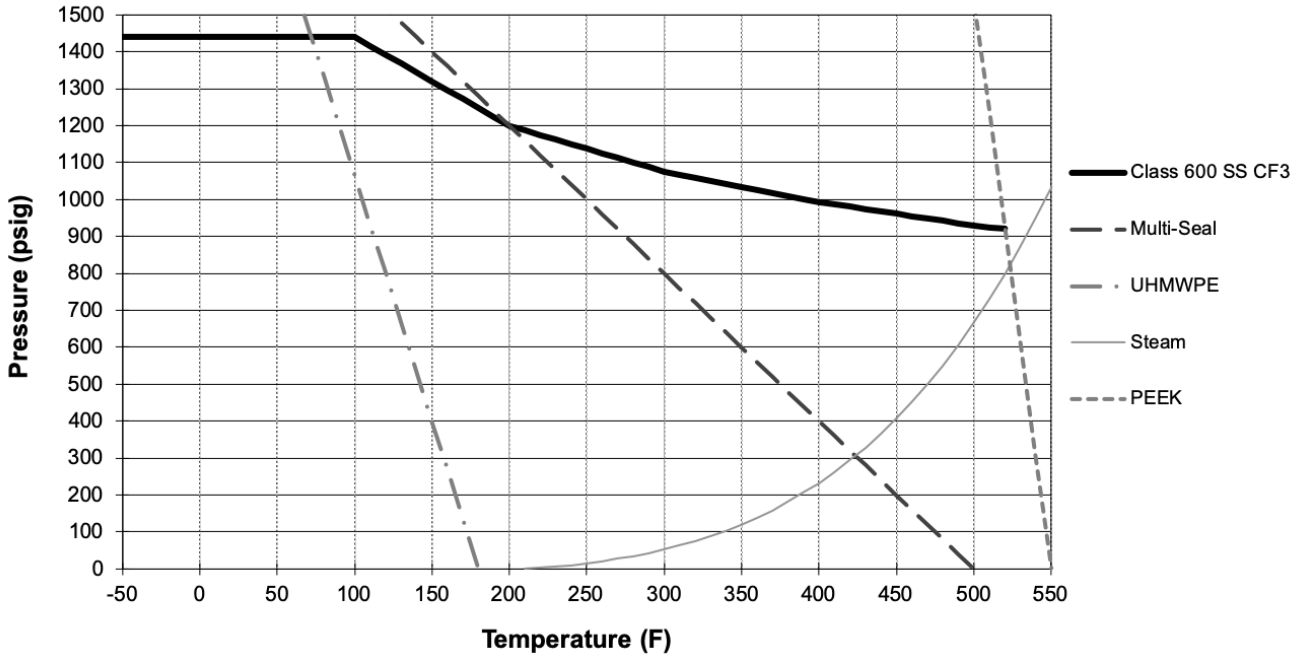

ASME CLASS 300 (ALLOY 20) ASTM A351-CN7M GRAPH 47

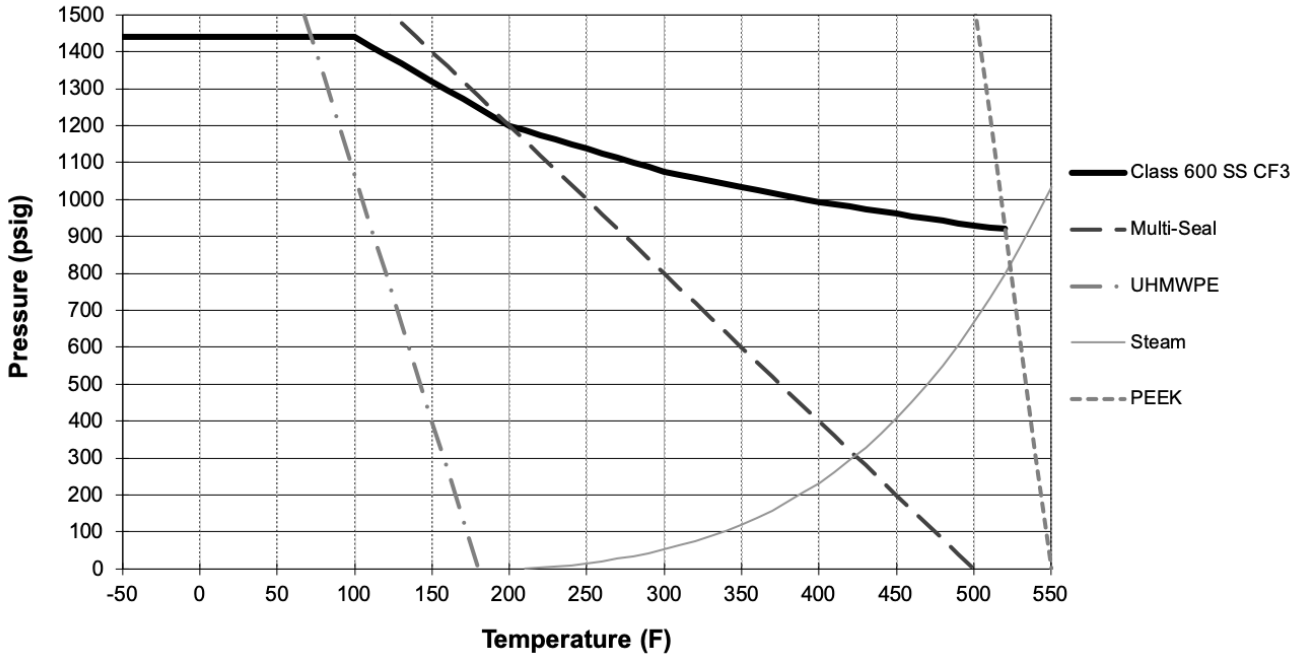

PRESSURE/TEMPERATURE RATINGS

ENGINEERING DATA

ASME CLASS 150 (HASTELLOY C) ASTM A494-CW12MW GRAPH 48

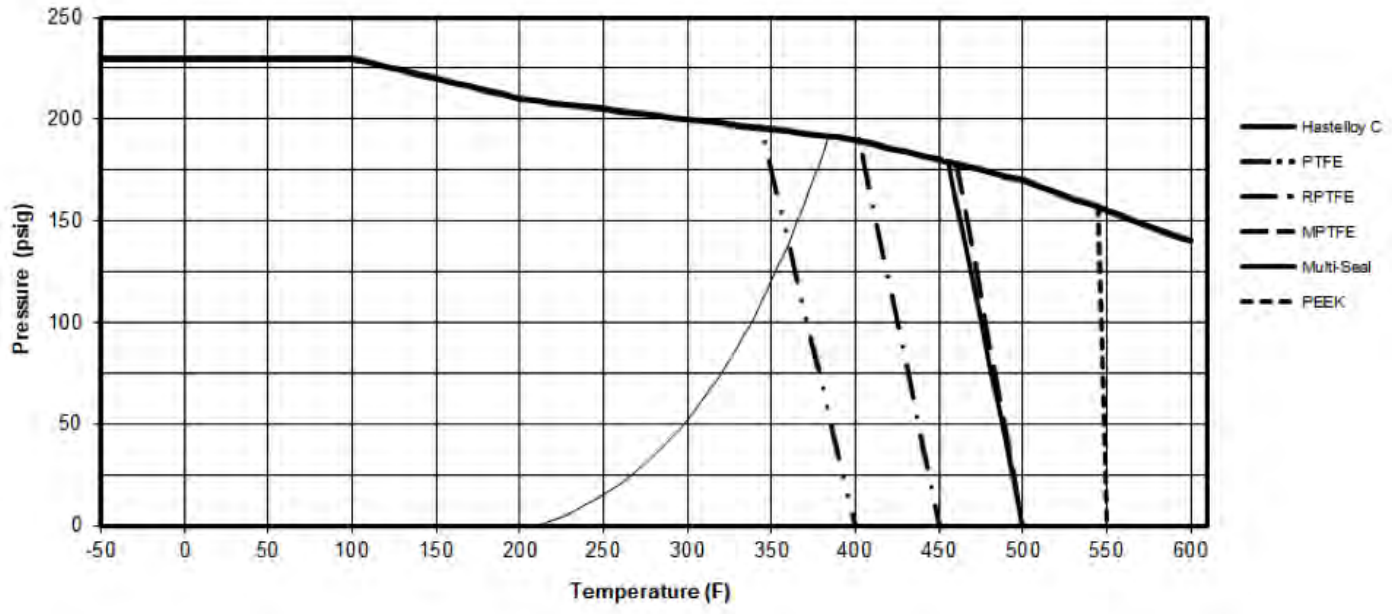

ASME CLASS 300 (HASTELLOY C) ASTM A494-CW12MW GRAPH 49

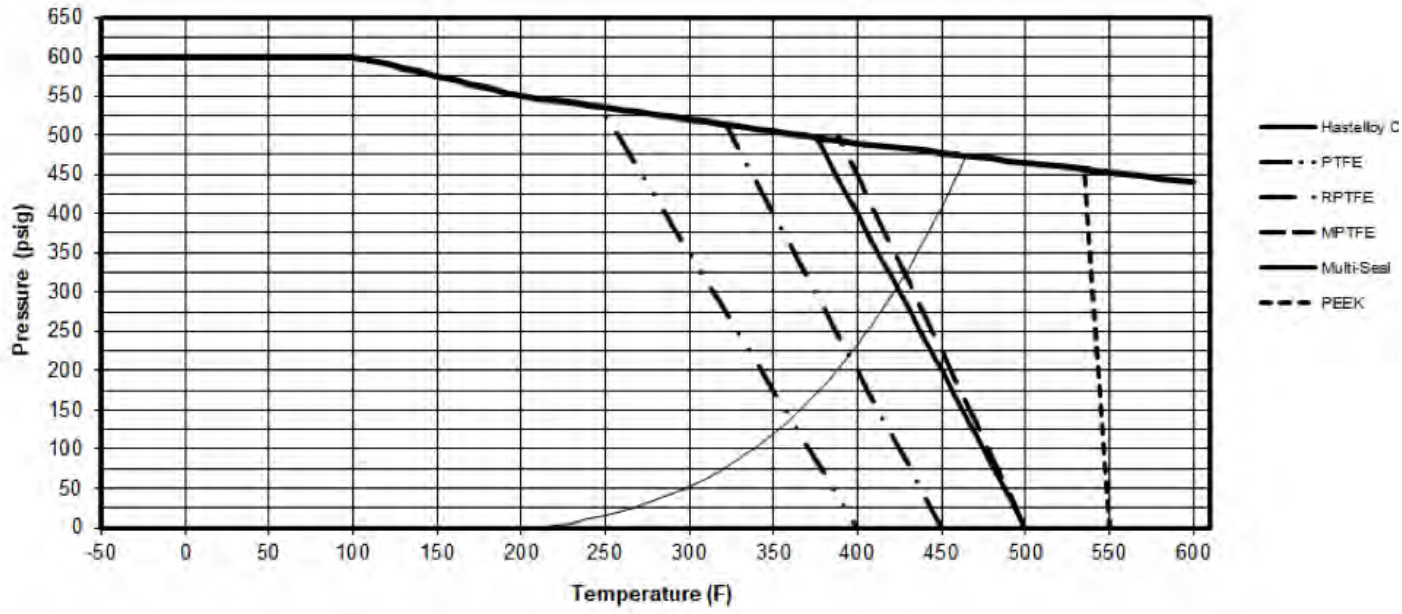

PRESSURE/TEMPERATURE RATINGS

ENGINEERING DATA

ASME CLASS 150 (304/304L) ASTM A351-CF3 GRAPH 50

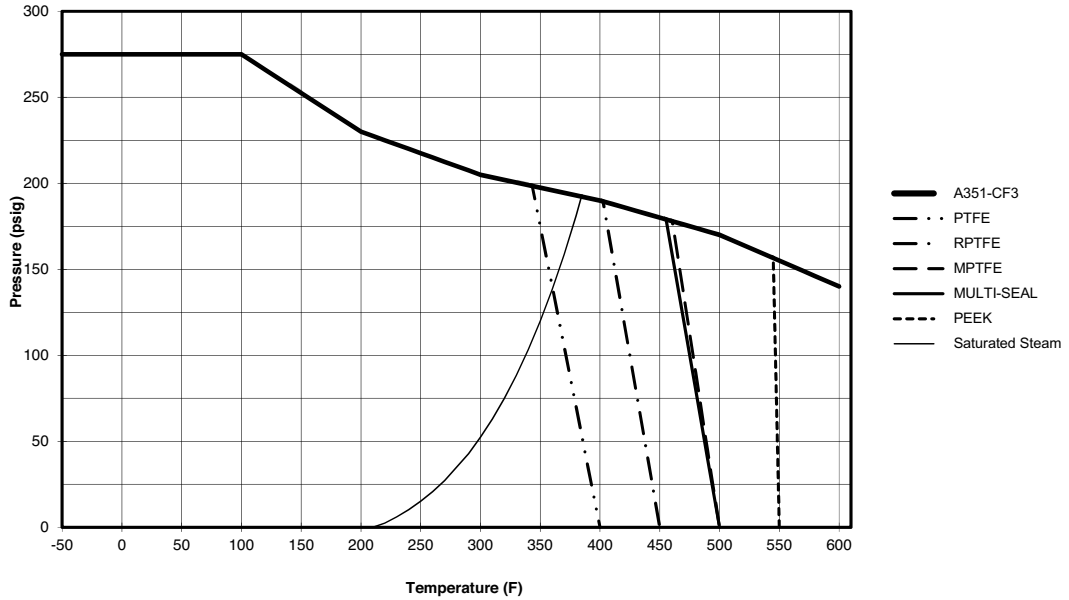

ASME CLASS 300 (304/304L) ASTM A351-CF3 GRAPH 51

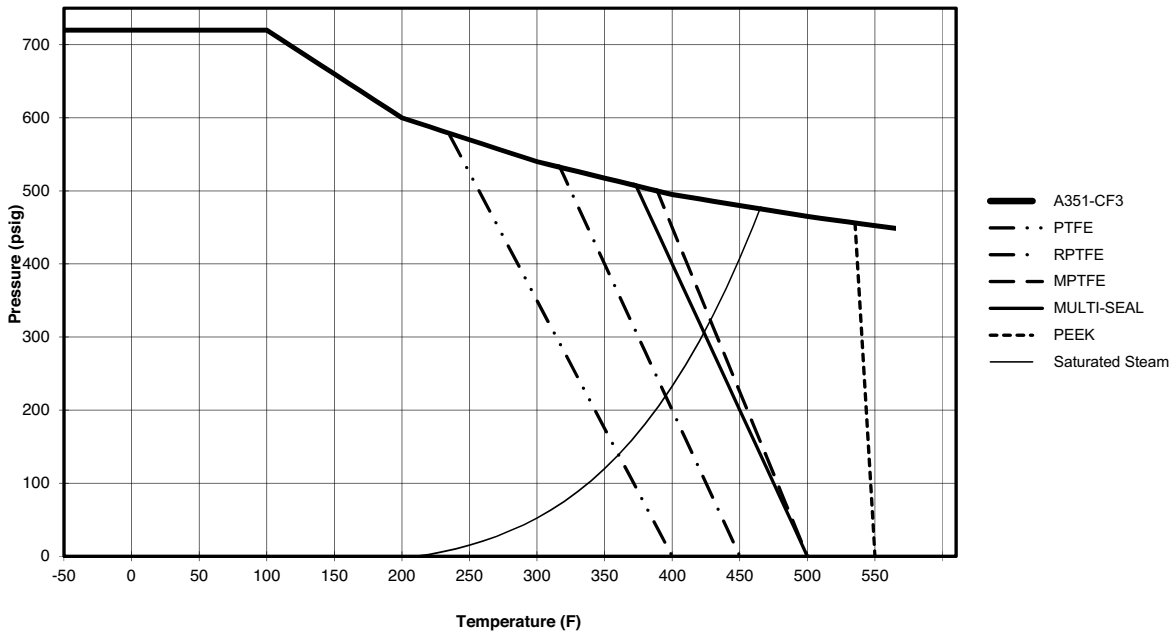

PRESSURE/TEMPERATURE RATINGS

ENGINEERING DATA

ASME CLASS 600 (MONEL) ASTM A494-M35-1 GRAPH 50

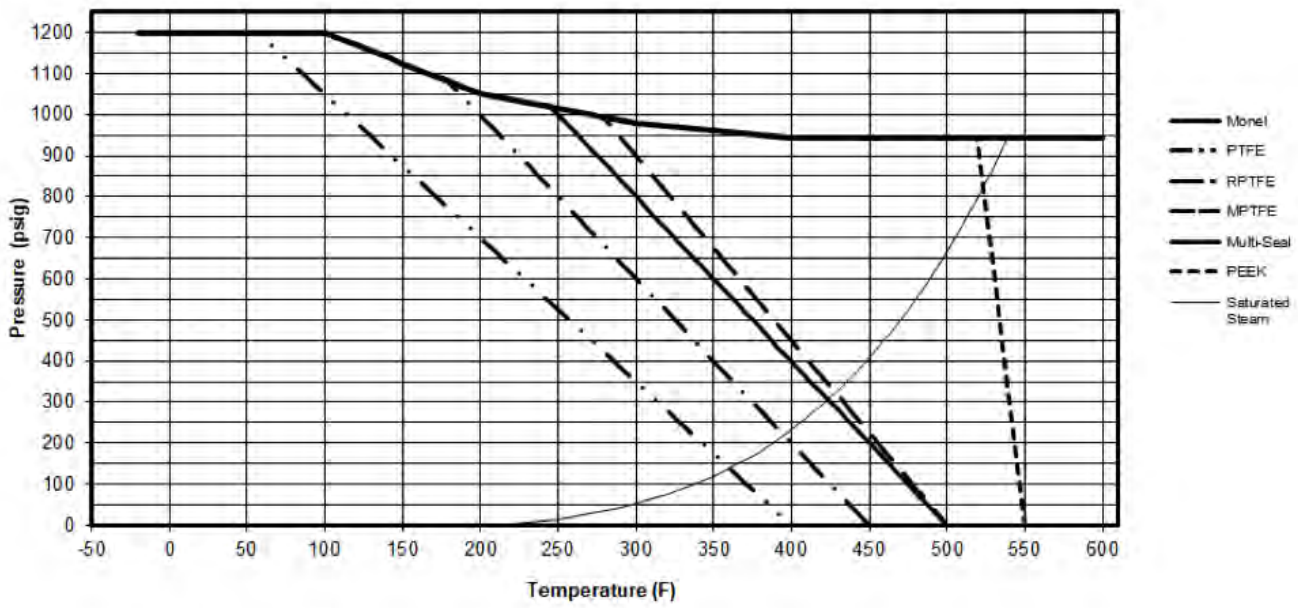

MATERIAL REFERENCE DATA

ENGINEERING DATA

CARBON STEEL

ITEM PROPERTY	BARSTOCK	CASTING	FORGING
ASTM Specifications	A108-1215	A216-WCB	A105
Unified Numbering System	G12150	J03002	K03504
MAJOR ELEMENTS			
Carbon	0.09% max.	0.30% max.	0.35% max.
Manganese	0.75 - 1.05%	1.00% max.	0.60 - 1.05%
Phosphorus	0.04 - 0.09%	0.035% max.	0.035% max.
Sulfur	0.26 - 0.35%	0.035% max	0.04% max.
Silicon	-	0.60% max.	0.10 - 0.35%
MECHANICAL PROPERTIES			
Tensile Strength	70,000 psi min.	70,000 psi min.	70,000 psi min.
Yield Strength	36,000 psi min.	36,000 psi min.	36,000 psi min.

316 STAINLESS STEEL

ITEM PROPERTY	BARSTOCK	CASTING	FORGING
ASTM Specifications	A276-316	A351-CF8M	A182-F316
Unified Numbering System	S31600	J92900	S31600
MAJOR ELEMENTS			
Carbon	0.08% max.	0.08% max.	0.08% max.
Chromium	16.00 - 18.00%	18.00 - 21.00%	16.00 - 18.00%
Molybdenum	2.00 - 3.00%	2.00 - 3.00%	2.00 - 3.00%
Nickel	10.00 - 14.00%	9.00 - 12.00%	10.00 - 14.00%
MECHANICAL PROPERTIES			
Tensile Strength	75,000 psi min.	70,000 psi min.	75,000 psi min.
Yield Strength	30,000 psi min.	30,000 psi min.	30,000 psi min.

316L STAINLESS STEEL

ITEM PROPERTY	BARSTOCK	CASTING	FORGING
ASTM Specifications	A276-316L	A351-CF3M	A182-F316L
Unified Numbering System	S31603	J92800	S31603
MAJOR ELEMENTS			
Carbon	0.03% max.	0.03% max.	0.03% max.
Chromium	16.00 - 18.00%	17.00 - 21.00%	16.00 - 18.00%
Molybdenum	2.00 - 3.00%	2.00 - 3.00%	2.00 - 3.00%
Nickel	10.00 - 14.00%	9.00 - 13.00%	10.00 - 15.00%
MECHANICAL PROPERTIES			
Tensile Strength	70,000 psi min.	70,000 psi min.	75,000 psi min.
Yield Strength	25,000 psi min.	30,000 psi min.	30,000 psi min.

ALLOY 20

ITEM PROPERTY	BARSTOCK	CASTING	FORGING
ASTM Specifications	B473-N08020	A351-CN7M	B462-N08020
Unified Numbering System	N08020	N08007	N08020
MAJOR ELEMENTS			
Chromium	19.00 - 21.00%	19.00 - 22.00%	19.00 - 21.00%
Copper	3.00 - 4.00%	3.00 - 4.00%	3.00 - 4.00%
Manganese	2.00% max.	1.50% max.	2.00% max.
Molybdenum	2.00 - 3.00%	2.00 - 3.00%	2.00 - 3.00%
Nickel	32.00 - 38.00%	27.50 - 30.50%	32.00 - 38.00%
MECHANICAL PROPERTIES			
Tensile Strength	80,000 psi min.	62,000 psi min.	80,000 psi min.
Yield Strength	35,000 psi min.	25,000 psi min.	35,000 psi min.

MATERIAL REFERENCE DATA

ENGINEERING DATA

HASTELLOY

ITEM PROPERTY	BARSTOCK	CASTING	FORGING
ASTM Specifications	B574-C276	A494-CW12MW	B564-N10276
Unified Numbering System	N10276	N30002	N10276
MAJOR ELEMENTS			
Chromium	14.5 - 16.5%	15.5 - 17.5%	14.5 - 16.5%
Molybdenum	15.0 - 17.0%	16.0 - 18.0%	15.0 - 17.0%
Nickel	51.0 - 63.5%	49.2 - 60.0%	51.0 - 63.5%
Tungsten	3.0 - 4.5%	3.75 - 5.25%	3.0 - 4.5%
MECHANICAL PROPERTIES			
Tensile Strength	100,000 psi min.	72,000 psi min.	100,000 psi min.
Yield Strength	41,000 psi min.	40,000 psi min.	41,000 psi min.

NICKEL

ITEM PROPERTY	BARSTOCK	CASTING	FORGING
ASTM Specifications	B160-N02200	A494-CZ100	B160-N02200
Unified Numbering System	N02200	N02100	N02200
MAJOR ELEMENTS			
Nickel	99.00% min.	95.00% min.	99.00% min.
MECHANICAL PROPERTIES			
Tensile Strength	55,000 psi min.	50,000 psi min.	55,000 psi min.
Yield Strength	15,000 psi min.	18,000 psi min.	15,000 psi min.

NICKEL-COPPER ALLOY (MONEL®)

ITEM PROPERTY	BARSTOCK	CASTING	FORGING
ASTM Specifications	B164-N04400	A494-M35-1	B164-N04400
Unified Numbering System	N04400	N/A	N04400
MAJOR ELEMENTS			
Copper	28.00 - 34.00%	26.00 - 33.00%	28.00 - 34.00%
Iron	2.50% max.	3.50% max.	2.50% max.
Manganese	2.00% max.	1.50% max.	2.00% max.
Nickel	63.00% min.	60.00% min.	63.00% min.
MECHANICAL PROPERTIES			
Tensile Strength	70,000 psi min.	65,000 psi min.	70,000 psi min.
Yield Strength	25,000 psi min.	25,000 psi min.	25,000 psi min.

LEADED BRASS & BRONZE ALLOYS

ITEM PROPERTY	BARSTOCK	CASTING
ASTM Specification	B16	B584
Unified Numbering System	C36000	C84400
MAJOR ELEMENTS		
Copper	60.0 - 63.0%	78.0 - 82.0%
Tin		2.3 - 3.5%
Lead	2.5 - 3.7%	6.0 - 8.0%
Zinc	33.0 - 37.5%	7.0 - 10.0%
MECHANICAL PROPERTIES		
Tensile Strength	25,000 psi min.	29,000 psi min.
Yield Strength	10,000 psi min.	13,000 psi min.

LEAD FREE ALLOYS

ITEM PROPERTY	CASTING	BARSTOCK
ASTM Specification	B30	B927
Unified Numbering System	C89836	C27451
MAJOR ELEMENTS		
87.0 - 91.0%	Copper	61.0 - 65.0%
4.0 - 6.0%	Tin	
.25& max.	Lead	0.25% max.
2.0 - 4.0%	Zinc	Rem%
MECHANICAL PROPERTIES		
33,000 psi min.	Tensile Strength	55,000 psi Typ.
15,000 psi min.	Yield Strength	35,000 psi Typ.

SEAT APPLICATION GUIDE

ENGINEERING DATA

DESIGNATION	TEMP. RANGE	GENERAL DESCRIPTION
-01 (RPTFE)	to 450°F	Glass reinforced PolyTetraFluoroEthylene seat seals and packings: most commonly specified seat material. Maintains the chemical resistance of PTFE with increased resistance to wear and abrasion resulting in longer life.
-21 (UHMWPE)	to 180°F	Ultra High Molecular Weight PolyEthylene seats with graphite seals and packings: Offers good abrasion resistance making it suitable for use in high solids or slurry applications. This seat is frequently specified in services where fluorine off-gassing in even the slightest amounts is objectionable, services such as food and tobacco processing, and nuclear services. UHMWPE should be used with caution in the presence of solvents, and the operating torque can be expected to be 30% higher than RPTFE seat materials.
-35 (PTFE)	to 400°F	PolyTetraFluoroEthylene (PTFE) seats, seals and packings: general application seat material, exhibiting lowest operating torque and excellent resistance to chemical attack.
-38 (PEEK)	to 550°F	PolyEtherEtherKetone seats with graphite seals and packings: offers a high strength alternative to RPTFE, resistant to creep and cold flow. This seat offers good abrasion resistance. This material offers similar chemical resistance to PTFE but should be checked on application. For actuator sizing, consult factory.
-56 (Multifill)	to 500°F	Carbon and graphite reinforced PTFE seats, seals and packings: reduced creep and cold flow like any RPTFE but with 20% lower operating torque than the glass reinforced versions.
-64 (Multifill)	to 500°F	Carbon and graphite reinforced PTFE seats, seals and packings: reduced creep and cold flow like any RPTFE but with 20% lower operating torque than the glass reinforced versions. Includes handle graphics for 250 psig saturated steam.
-65 (Multifill)	to 500°F	Carbon and graphite RPTFE seats, graphite seals and packings: reduced creep and cold flow like any RPTFE but with 20% lower operating torque than the glass reinforced versions. This configuration is also good for steam applications.
-78 (Delrin)	to 230°F	Delrin is the homopolymer version of Acetal. The material is both strong and rigid but not brittle making it ideal for many high pressure applications. It's a preferred material for use in hydrocarbon systems, oils and gases, but should be used with caution in
-79 (Nylon)	to 300°F	Nylon is a polyamide. This material has very good mechanical properties making it ideally suited for many high pressure applications. It's a preferred material for use in hydrocarbon systems, oils and gases, but should not be used in wet systems above 120°F.
-80 (Multiseal)	to 500°F	Apollo's multiseal is modified PolyTetraFluoroEthylene (PTFE) that maintains the exceptional chemical resistance and heat resistance properties of conventional PTFE. Apollo's Multiseal has increased resistance to wear, abrasion and creep compared to PTFE.
-89 (PFA)	to 400°F	Perfluoroalkoxy seats withstand the effects of polymeric monomers such as butadiene and styrene.

CONVERSION FACTORS

ENGINEERING DATA

TO CONVERT	INTO	MULTIPLY BY
atmospheres	cms of mercury	76.0
atmospheres	ft. of water (at 4°C)	33.90
atmospheres	in. of mercury (at 0°C)	29.92
atmospheres	kgs/sq cm	1.0333
atmospheres	kgs/sq meter	10,332
atmospheres	pounds/sq. in.	14.70
Bar	newtons/sq m	105
bar	atmospheres	0.9869
bar	at (tech.)	1.0197
bar	psi	14.504
Barrels-Oil	gals-oil	42
BT Units	kg-calories	0.2520
BTU's	ft-lbs	777.9
BTU's	hp-hrs	3.927 x 10-4
BTU's	kgs-meters	107.5
BTU's	kw-hrs	2.928 x 10-4
BTU/Min	ft-lbs/sec	12.96
BTU/min	hp	0.02356
BTU/min	kw	0.01757
BTU/min	watts	17.57
Centimeters	inches	0.3937
cm	meters	0.01
cm	mm	10
Cms Mercury	atm	0.01316
cms mercury	ft water	0.4461
cms mercury	kgs/sq meter	136.0
cms mercury	lbs/sq ft	27.85
cms mercury	lbs/sq in	0.1934
Cms/Second	ft/min	1.969
cms/sec	ft/sec	0.03281
cms/sec	km/hr	0.036
cms/sec	meters/min	0.6
cms/sec	miles/hr	0.02237
cms/sec	miles/min	3.728 x 10-4
Cms/Sec/Sec	ft/sec/sec	0.03281
Cubic Cms	cu ft	3.531 x 10-5
Cu cms	cu in	6.102 x 10-2
cu cms	cu meters	10-6
cu cms	cu yds	1.308 x 10-6
cu cms	gals	2.642 x 10-4
cu cms	liters	10-3
cu cms	pints (liq)	2.113 x 10-3
cu cms	quarts (liq)	1.057 x 10-3
Cubic Feet	cubic cms	2.832 x 104
cu ft	cu inches	1728
cu ft	cu meters	0.02832
cu ft	cu yds	0.03704
cu ft	gals	7.48052
cu ft	liters	28.32
cu ft	pints (liq)	59.84
cu ft	quarts (liq)	29.92
Cu Ft/min	cu cms/sec	472.0
cu ft/min	gals/sec	0.1247
cu ft/min	liters/sec	0.4720
cu ft/min	lbs water/min	62.43
cu ft/sec	gals/min	448.831
Cu Inches	cc	16.39
cu ins	cu ft	5.787 x 10-4
cu ins	cu meters	1.639 x 10-5
cu ins	cu yds	2.143 x 10-5
cu ins	gals	4.329 x 10-3
cu ins	liters	1.639 x 10-2
cu ins	pints (liq)	0.03463
cu ins	quarts (liq)	0.01732
Cu Meters	cc	104

TO CONVERT	INTO	MULTIPLY BY
cu M	cu ft	35.31
cu M	cu ins	61,023
cu M	cu yds	1.308
cu M	gals	264.2
cu M	liters	103
cu M	pints (liq)	2113
cu M	quarts (liq)	1057
Cu Yards	cu cms	7.646 x 105
cu yds	cu ft	27
cu yds	cu ins	46,656
cu yds	cu meters	0.7646
cu yds	gals	202.0
Decimeters	meters	0.1
Deg (Angle)	minutes	60
degs (angle)	radians	0.01745
degs (angle)	secs	3600
Degrees/Sec	radians/sec	0.01745
degs/sec	revs/min	0.1667
degs/sec	revs/sec	0.002778
Feet	cms	30.48
ft	ins	12
ft	meters	0.3048
ft	yds	1/3
Ft of Water	atms	0.02950
ft of w	ins mercury	0.8826
ft of w	kgs/sq cm	0.03048
ft of w	lbs/sq ft	62.32
ft of w	lbs/sq in	0.4328
Feet/Min	cms/sec	0.5080
ft/min	ft/sec	0.01667
ft/min	kms/hr	0.01829
ft/min	meters/min	0.3048
ft/min	miles/hr	0.01136
Ft/Sec/Sec	cms/sec/sec	30.48
ft/sec/sec	Meters/sec/sec	0.3048
Ft-Pounds	BTU s	1.286 x 10-3
ft lbs	hp-hrs	5.050 x 10-7
ft lbs	kg-calories	3.241 x 10-4
ft lbs	kg-meters	0.1383
ft lbs	kw-hrs	3.766 x 10-7
Ft-lbs/Min	BTUs/min	1.286 x 10-3
ft-lbs/min	ft-lbs/sec	0.01667
ft-lbs/min	hp	3.030 x 10-5
ft-lbs/min	kg-calories/min	3.241 x 10-4
ft-lbs/min	kws	2.260 x 10-5
Ft-Lbs/Sec	BTUs/min	7.717 x 10-2
ft-lbs/sec	hp	1.818 x 10-3
ft-lbs/sec	kg-calories/min	1.945 x 10-2
ft-lbs/sec	kws	1.356 x 10-3
Gallons	ccs	3785
gals	cu ft	0.1337
gals	cu ins	231
gals	cu meters	3.785 x 10-3
gals	liters	3.785
gals	pints (liq)	8
gals	quarts (liq)	4
Gallons, Imp	US gals	1.20095
gallons, US	imp gals	0.83267
Gals Water	lbs water	8.3304
Gallons/Min	cu ft/sec	2.228 x 10-3
gals/min	liters/sec	0.06308
gals/min	cu ft/hr	8.0208
Horse-Power	BTUs/min	42.44
hp	ft-lbs/min	33,000
hp	ft-lbs/sec	550

aalberts integrated piping systems

CONVERSION FACTORS

ENGINEERING DATA

TO CONVERT	INTO	MULTIPLY BY
hp	hp (metric)	1.014
hp	kg-calories/min	10.70
hp	kws	0.7457
hp	watts	745.7
Hp-Hours	BTUs	2547
hp-hrs	ft-lbs	1.98 x 106
hp-hrs	kg-calories	641.7
hp-hrs	kg-meters	2.737x105
hp-hrs	kw-hrs	0.7457
Inches	cms	2.540
Inches	mms	25.4
Ins Mercury	atms	0.03342
ins mercury	ft water	1.133
ins mercury	kgs/sq cm	0.03453
ins mercury	lbs/sq ft	70.73
ins mercury	lbs/sq in	0.4912
Ins of Water	atms	0.002458
ins of w	ins mercury	0.07355
ins of w	kgs/sq cm	0.002540
ins of w	lbs/sq ft	5.202
ins of w	lbs/sq in	0.03613
Kilograms	dynes	980,665
kgs	lbs	2.205
kgs	tons (short)	1.102 x 10-3
kgs	grams	1000
Kgs/Sq Cm	atms	0.9678
kgs/sq cm	ft water	32.81
kgs/sq cm	ins mercury	28.96
kgs/sq cm	lbs/sq ft	2048
kgs/sq cm	lbs/sq in	14.22
Kilometers	cms	105
kms	ft	3281
kms	meters	103
kms	miles	0.6214
Kms/Hr	cms/sec	27.78
kms/hr	ft/min	54.68
kms/hr	ft/sec	0.9113
kms/hr	meters/min	16.67
kms/hr	miles/hr	0.6214
Kms/Hr/Sec	cms/sec/sec	27.78
kms/hr/sec	ft/sec/sec	0.9113
kms/hr/sec	Meters/sec/sec	0.2778
Kilowatts	BTUs/min	56.92
kws	ft-lbs/min	4.425 x 104
kws	ft-lbs/sec	737.6
kws	hp	1.341
kws	kg-calories/min	14.34
kws	watts	103
Kilowatt-Hrs	BTUs	3415
kw-hrs	ft-lbs	2.655 x 106
kw-hrs	hp-hours	1.341
kw-hrs	kg-calories	860.5
kw-hrs	kg-meters	3.671 x 105
Liters	ccs	103
liters	cu ft	0.03531
liters	cu ins	61.02
liters	cu meters	10-2
liters	gals	0.2642
liters	quarts (liq)	1.057
Liters/Min	gals/sec	4.403 x 10-3
Meters	cms	100
meters	ft	3.281
meters	ins	39.37
meters	kms	10-3

TO CONVERT	INTO	MULTIPLY BY
meters	mms	103
meters/min	cms/sec	1.667
meters/min	ft/min	3.281
meters/min	ft/sec	0.05468
meters/min	kms/hr	0.06
meters/min	miles/hr	0.03728
Meters/Sec	ft/min	196.8
meters/sec	ft/sec	3.281
meters/sec	kms/hr	3.6
meters/sec	kms/min	0.06
meters/sec	miles/hr	2.237
meters/sec	miles/min	0.03728
Microns	meters	10-6
microns	in	39 x 10-6
Miles/Hr	cms/sec	44.70
miles/hr	ft/min	88
miles/hr	ft/sec	1.467
miles/hr	kms/hr	1.609
miles/hr	meters/min	26.82
Millimeters	cms	0.1
mms	ins	0.03937
Minutes (Angle)	radians	2.909 x 10-4
Newton	kgs	0.1020
Ounces	lbs	0.0625
ozs.	gram	28.349527
Ozs (Fluid)	cu in	1.805
ozs. (fluid)	liters	0.02957
Pounds	ozs.	16
LB.	kgs	0.4536
LB.	tons (short)	0.0005
LB.	newtons (N)	4.44
LB.	gram	453.5924
Pounds/Inch	newton-meters	0.113
Pounds/Foot	newton-meters	1.356
Lbs of Water	cu ft	0.01605
lbs of water	cu in	27.73
lbs of water	gals	0.1204
Lbs of Water/Min	cu ft/sec	2.679 x 10-4
Pounds/Cu Ft	lbs/cu in	5.787 x 10-4
Pounds/Cu In	lbs/cu ft	1728
Pounds/Sq In	atms	0.06804
lbs/sq in	ft water	2.311
lbs/sq in	in mercury	2.036
lbs/sq in	kgs/sq cm	0.07031
Radians	degrees	57.29578
Tons (Long)	kgs	1016
tons (long)	lbs	2240
tons (long)	tons (short)	1.12000
Tons (Short)	kgs	2000
tons (short)	kps	907.18486
tons (short)	tons (long)	0.89287
tons (short)	tons (metric)	0.90718
Watts	BTUs/min	0.05692
watts	ft-lbs/min	44.26
watts	ft-lbs/sec	0.7376
watts	hp	1.341 x 10-3
watts	kg-calories/min	0.01434
watts	kws	10-3
Watts/Hours	BTUs	3.415
watts-hrs	ft-lbs	2655
watts-hrs	hp-hrs	1.341 x 10-3
watts-hrs	kg-calories	0.8605
watts-hrs	kg-meters	367.1
watts-hrs	kw-hrs	10-3

SECTION M

REVISIONS

PAGE	DATE	DESCRIPTION
M-3	21APR17	Added Cv values for 72-A (forged).
	20JAN17	Removed 1.25" 77-AR.
M-7	04MAY17	Added "-EF" torque adder.
M-8	04MAY17	Added "-EF" torque adder.
M-33	19MAR18	Updated carbon steel and alloy 20 chart.
M-34	19MAR18	Updated Hastelloy, nickel and Monel charts.
	30JUN16	Updated leaded brass & bronze alloys and lead free alloys charts.

"Apollo" Valves | INDUSTRIAL PRODUCTS

Top Entry Valves

section N

SECTION N

TOP ENTRY VALVES

DESCRIPTION	PAGE
TOP ENTRY BALL VALVE FEATURES	N-3
MATERIALS LIST	N 4-5
SEAT MATERIALS AND SEAT DESIGNS	N 6-7
PRESSURE-TEMPERATURE RATINGS	N 8-10
DIMENSIONS	
FLANGED, STANDARD PORT	N 14-15
SOCKET WELD, STANDARD PORT	N 16-17
NPT, STANDARD PORT	N 18-19
BUTT WELD, STANDARD PORT	N 20-21
FLANGED, FULL PORT	N 22-23
SOCKET WELD, FULL PORT	N-24
NPT, FULL PORT	N-25
BUTT WELD, FULL PORT	N-26
ACTUATOR MOUNTING	N 27-32
STANDARD BONNETS	N-33
EXTENDED BONNETS	N-34
DOUBLE PACKED BONNETS	N-35
JACKETED VALVES (STEAM, OIL)	N-36
SPECIAL APPLICATIONS	N-37
FLOW COEFFICIENTS	N-38
OPERATING TORQUES	N-39
HOW TO SPECIFY TOP ENTRY VALVES	N 40-41
HOW TO SPECIFY SEAL REPAIR KIT FOR ISO 5211 BONNET	N-42
WARRANTY	N-43

TOP ENTRY VALVES

FEATURES

TOP ENTRY ADVANTAGES

- Self-Adjusting Seats: Compensate for Wear & Temperature Fluctuations
- Spring Loaded Low Pressure Seals
- Pressure Activated Seating
- Built-In Antistatic Feature
- Simplified In-line Service
- Minimal Potential Leak Paths
- ISO 5211 Mounting Pad
- 5 Year Warranty, Made in USA

STANDARDS COMPLIANCE

(Most valves within this family of products comply with the requirements of these listed standards.)

- ASME B16.5 "Pipe Flanges and Flanged Fittings"
- ASME B16.10 "Face to Face Dimensions of Valves" (Except Full Port Valves)
- ASME B16.34 "Valves – Flanged, Threaded, and Welding End."
- ASME B31.1 "Power Piping"
- ASME B31.3 "Chemical Plant and Petroleum Refinery Piping"
- ASME B31.8 "Gas Transmission and Distribution Piping Systems"
- API 598 "Valve Inspection and Testing"
- API 607 "Fire Test – Soft Seated Quarter Turn Valves" (Depending on Seat and Seal Selection)
- MSS SP-25 "Standard Marking System for Valves"
- MSS SP-61 "Pressure Testing of Steel Valves"
- MSS SP-72 "Ball Valves with Flanged of Buttweld Ends"

NO SURPRISES

Apollo's Top Entry Ball Valves offer more. In addition to the three things everyone has come to expect from Apollo: high quality products, competitive pricing and on time delivery, Apollo Top Entry Valves deliver additional premiums; a broader choice of material for both internal and external components, more optional features to choose from, and selectable seal material combinations all resulting in an expanded serviceable application range.

FIT FOR PURPOSE

These premiums can be combined to create a product uniquely tailored to customer specifications and applications. These additional options allow a valve to be selected without compromising critical performance requirements or operating conveniences and without adding unnecessary features and the costs associated with them.

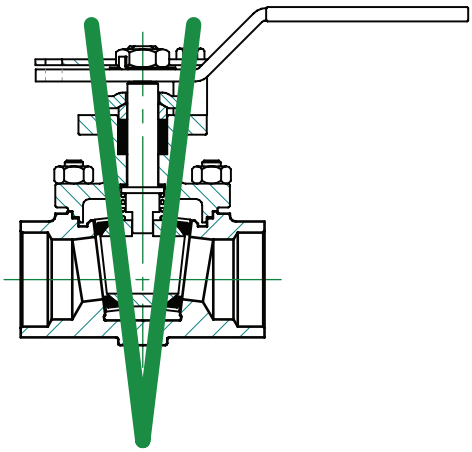

THE CORRECT DESIGN

The special "V" seating design introduced the self-adjusting seat to the floating ball valve. This design does not rely on the built-in interference of conventional floating ball valves. It provides automatic compensation for pressure, temperature and wear. As these changes occur, the ball and seats are continuously snugged down into the "V" resulting in positive leak-tight shutoff when using resilient seats. Maintaining a low pressure seal had been the most difficult condition for floating ball valves. The wedge effect on the ball and seats down the "V" assures continued low pressure sealing for the life of the seat. All Apollo Top Entry Valves have an "anti-static" feature designed in. All valve configurations also feature blow-out proof stems as standard.

THE RIGHT APPLICATION

Apollo's Top Entry Valves provide simplified in-line maintenance in the most natural way. The valve body is allowed to act as a permanent part of the piping system. Potential leak paths are eliminated with the one piece body. Only the bonnet seal and stem seals remain to be counted. And, with the variety of bonnet gaskets and stem seal arrangements available through the selection of optional features, even these threats can be minimized.

TOP ENTRY VALVES

MATERIALS

BODY MATERIAL

BODY MATERIAL CODE:	A	B	C	F	G	H	J	K	L
DESCRIPTION	ALLOY 20	CF3M SS	CARBON STEEL	INCONEL (625)	317 SS	HASTELLOY C	DUPLEX (2205)	SUPER DUPLEX (2507)	LCC CARBON STEEL
Body (all types)	ASTM A351 CN7M	ASTM A351 CF3M	ASTM A216 WCB	ASTM A494 CW6MC	ASTM A351 CG8M	ASTM A494 CW12MW	ASTM A995 CD3MN	ASTM A995 CD3MWCuN	ASTM A352 LCC
Bonnet									
Packing Gland	ASTM A276 Type 316 Stainless Steel								
Gland Plate	316 Stainless Steel								
Gland Plate Bolts	ASTM A193 Grade B8								
Stop	ASTM A276 Type 304								
Stop Bolts	300 Stainless Steel								
Lockplate	302 or 304 Stainless Steel								
Lever Assembly (1/2" - 2")	304 SS w/Vinyl Grip								
Lever Stem Nut (1/2" - 2")	300 Series Stainless Steel								
Lever Assembly (3" - 8")	316 SS Adapter with Stainless Pipe 1								
Adapter Screw (3" - 8")	300 Series Stainless Steel								
Stem Screw (3" - 8")	300 Series Stainless Steel								
External Grounding Spring	Stainless Steel								
Body Joint Studs	ASTM A193-B8M		ASTM A193-B7	ASTM A193-B8M					
Body Joint Nuts	ASTM A194-Gr.8		ASTM A194-2H	ASTM A194-Gr.8					

Note 1: Carbon Steel valves have galvanized pipe handles

BODY MATERIAL CODE:	M	N	P	R	S	W	Y
DESCRIPTION	M35-1 (MONEL)	NICKEL (200)	CARBON	AL-6XN	STAINLESS STEEL	254 SMO	HASTELLOY B
Body (Flanged Ends)	ASTM A494 M35-1	ASTM A494 CZ100	ASTM A217 C12	ASTM A351 CN3MN AL-6XN	ASTM A351-CF8M	ASTM A351 CK3MCuN	ASTM A494 N12MV
Body (Buttweld, Socket Weld, and Screwed Ends)					ASTM A351-CF3M		
Bonnet					ASTM A351-CF8M		
Packing Gland	ASTM A276 Type 316 Stainless Steel						
Gland Plate	316 Stainless Steel						
Gland Plate Bolts	ASTM A193 Grade B8						
Stop	ASTM A276 Type 304						
Stop Bolts	300 Stainless Steel						
Lockplate	302 or 304 Stainless Steel						
Lever Assembly (1/2" - 2")	304 SS w/Vinyl Grip						
Lever Stem Nut (1/2" - 2")	300 Series Stainless Steel						
Lever Assembly (3" - 8")	316 SS Adapter with Stainless Pipe						
Adapter Screw (3" - 8")	300 Series Stainless Steel						
Stem Screw (3" - 8")	300 Series Stainless Steel						
External Grounding Spring	Stainless Steel						
Body Joint Studs	ASTM A193-B8M						
Body Joint Nuts	ASTM A194-Gr.8						

TOP ENTRY VALVES

MATERIALS

TRIM (INTERNAL) MATERIAL

TRIM MATERIAL CODE:	A	B	D	E	F	H	J	K
DESCRIPTION	**ALLOY 20**	**316L SS**	**HASTELLOY C STEM, M35-1 BALL**	**410 SS**	**INCONEL (625)**	**HASTELLOY C**	**DUPLEX (2205)**	**SUPER DUPLEX (2507)**
Ball	ASTM A351-CN7M or ASTM B473-CB-3	ASTM A351-CF3M or ASTM A276-316L	ASTM A494-M35-1 or ASTM B164-K400 N04400	ASTM A276 -410	ASTM B446 N06625 or ASTM A494 GR.CW6MC	ASTM A494-CW12MW or ASTM B574-C276	ASTM A479/A276 UNS S31803 or ASTM A995 GR. CD3MN	ASTM A479/A276 UNS S32760 or ASTM A995 GR. CD3MWCuN
Stem	ASTM B473-CB-3 N08020	ASTM A276-316L	ASTM B574-C276	ASTM A276 -410 COND.A	ASTM B446 N06625	ASTM B574-C276	ASTM A479/A276 S31803	ASTM A479/A276 S32760
Seat Ring(s) (from bar, tube or pipe depending on availability)	ASTM B473-CB-3 N08020	ASTM A276-316L	ASTM B574-C276	ASTM A269-316 or A276-316/316L or A312-316	ASTM B446 N06625	ASTM B574-C276	ASTM A479/A276 S31803	ASTM A479/A276 S32760
Internal Spring (5, 6, 8, C, D, G, J, L, M, N, U seats)	Inconel X-750	ASTM A312-Type 316	ASTM B574 Hastelloy C	ASTM A312-Type 316	Inconel X-750	ASTM B574 Hastelloy C	Inconel X-750	
Internal Spring (4, 9, B, H seats)	Inconel X-750			Inconel X-750				

TRIM MATERIAL CODE:	M	N	R	S	W	Y
DESCRIPTION	**M35-1**	**NICKEL (200)**	**AL-6XN**	**STAINLESS STEEL**	**254 SMO**	**HASTELLOY B**
Ball	ASTM A494-M35-1 or ASTM B164-K400 N04400	ASTM A494-CZ100 or ASTM B160-200	ASTM B691 N08367 or ASTM A351 CN3MN	ASTM A351-CF8M or ASTM A276-316/316L A312-316	ASTM A351 CK3MCuN	ASTM B335 N10665 or ASTM A494-N-12MV
Stem	ASTM B164-K400 N04400	ASTM B160-200	ASTM B691 N08367		ASTM A182-F44 UNS S31254	ASTM B335 N10665
Seat Ring(s) (from bar, tube or pipe depending on availability)	ASTM B164-K400	ASTM B160-200	ASTM B691 N08367	ASTM A269-316 ASTM A276-316/316L or ASTM A312-316	ASTM A182-F44 UNS S31254	ASTM B335 N10665
Internal Spring (5, 6, 8, C, D, G, J, L, M, N, U seats)	Inconel X-750		Inconel X-750	ASTM A312-Type 316	Inconel X-750	Hastelloy B-2
Internal Spring (4, 9, B, H seats)			Inconel X-750			

SEAT & SEALS MATERIAL

SEAT CODE:	4	5	6	8	9	B	C	D
Seat	Carbon Graphite	55% Bronze, 5% Moly Filled PTFE	UHMWPE	Unfilled PEEK	Ceramic (Seats & Ball)	Carbon Reinforced PEEK	PFA	60% Stainless Filled PTFE
Seat O-ring	Not Applicable							
Stem Packing	Flexible Graphite							
Bonnet Gasket	Spiral Wound Flexible Graphite							
Stem Bearing	Nitronic® 60	PEEK			Nitronic® 60	PEEK		
Default Suffix	24							

SEAT CODE:	G	H	J	L	M	N	U
Seat	PCTFE	High Temp. Graphite	API 607 PFA Fire Seat	API 607 Multiseal Fire Seat	TFM Multiseal	Nylon	UHMWPE
Seat O-ring	Not Applicable		PFA	Multiseal Ring	N/A	Nylon	N/A
Stem Packing	RPTFE	Flexible Graphite			PTFE	Flexible Graphite	
Bonnet Gasket	RPTFE (150/300) Spiral Wound PTFE (600)	Spiral Wound Flexible Graphite			RPTFE (150/300) Spiral Wound PTFE (600)	Spiral Wound Flexible Graphite	
Stem Bearing	PEEK	Nitronic® 60	PEEK			Nylon	PEEK
Default Suffix	01	24			01	24	

TOP ENTRY VALVES

SEAT MATERIALS & SEAT DESIGN

SEAT CODE "G" (PCTFE)

Polychlorotrifluoroethylene is typically used in cryogenic applications. High resistance to inorganic corrosive liquids, including oxidizing acids. Resistant to most organic solvents except some highly halogenated and aromatic materials.

(FIGURE 1) SEE PRESSURE-TEMPERATURE CHART 3, PAGE 12.

SEAT CODE "L" (TFM MULTISEAL)

API-607 fire-safe design.

This seat design has been successfully tested to the requirements of API 607. The Multiseal seat is fully confined by a metallic seat holder which provides a secondary seal in the event of the loss of the primary TFM seal during a fire. The torque characteristics will be the same as in the #M seats.

(FIGURE 3) SEE PRESSURE-TEMPERATURE CHART 1, PAGE 11.

SEAT CODE "M" (TFM MULTISEAL)

Apollo's Multiseal is a modified PolyTetraFluoroEthylene (PTFE) that maintains the exceptional chemical resistance and heat resistance properties of conventional PTFE.

(FIGURE 1) SEE PRESSURE-TEMPERATURE CHART 1, PAGE 11.

SEAT CODE "C" (PFA)

Perfluoroalkoxy seats withstand the effects of polymeric monomers such as butadiene and styrene.

(FIGURE 2) SEE PRESSURE-TEMPERATURE CHART 1, PAGE 11.

SEAT CODE "J" (PFA)

API-607 fire-safe design

Perfluoroalkoxy seats withstand the effects of polymeric monomers such as butadiene and styrene. This seat design has been successfully tested to the requirements of API 607. The PFA seat is fully confined by a metallic seat holder which provides a secondary seal in the event of the loss of the primaryPFA seal during a fire. The torque characteristics will be the same as in the #C seats.

(FIGURE 3) SEE PRESSURE-TEMPERATURE CHART 1, PAGE 11.

SEAT CODE "5" (55% BRONZE / 5% MOLY BRTFE)

Specifically intended for steam applications. Also applicable to abrasive and throttling applications because of the heavy loading of reinforcing materials and the presence of the inner ring. However, chemical compatibility may be a limiting factor in the application of this seat.

(FIGURE 2) SEE PRESSURE-TEMPERATURE CHART 2, PAGE 11.

SEAT CODE "D" (50% STAINLESS STEEL SRTFE)

Intended for abrasive and throttling applications because of the heavy loading of reinforcing materials and the completely confined seat.

(FIGURE 2) SEE PRESSURE-TEMPERATURE CHART 1, PAGE 11.

SEAT CODE "6" (UHMWPE)

Ultra High Molecular Weight Polyethylene offers good abrasion resistance making it suitable for use in high solids or slurry applications. These seats are completely confined by a metallic seat holder enhancing their performance in abrasive services. This seat is frequently specified in services where fluorine off-gasing in even the slightest amounts is objectionable. Examples of these services are food, tobacco processing, and nuclear services.

(FIGURE 2) SEE PRESSURE-TEMPERATURE CHART 4, PAGE 12.

FIGURE 1
SEAT DESIGN 1

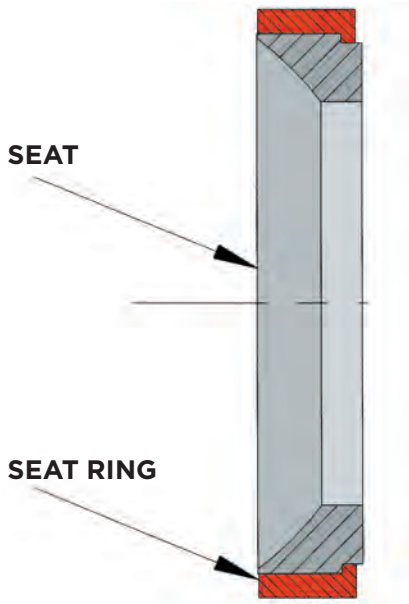

FIGURE 2
SEAT DESIGN 2

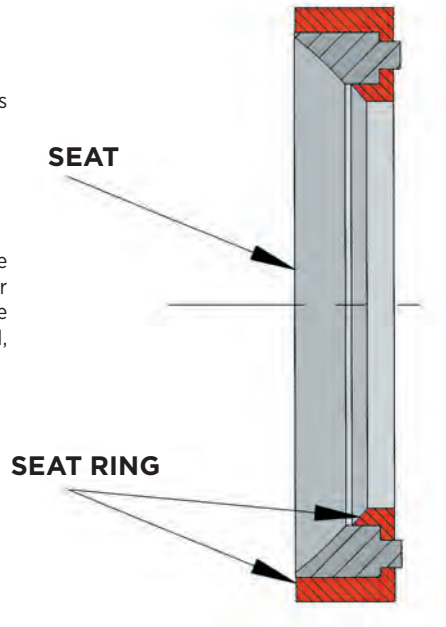

TOP ENTRY VALVES

SEAT MATERIALS & SEAT DESIGN

FIGURE 3
SEAT DESIGN 3

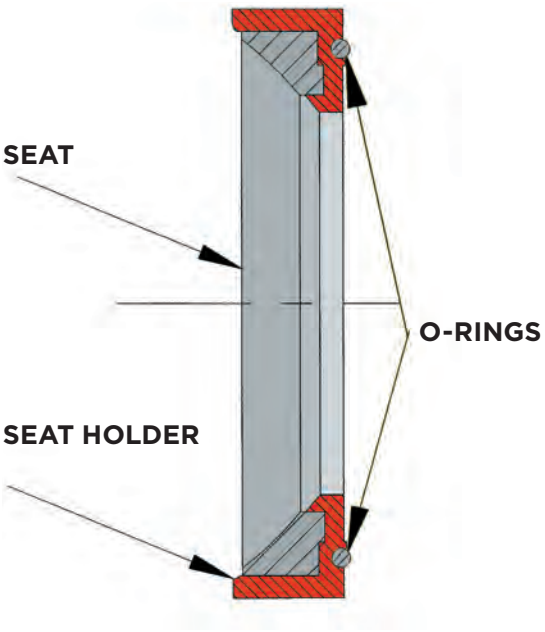

FIGURE 4
SEAT DESIGN 4

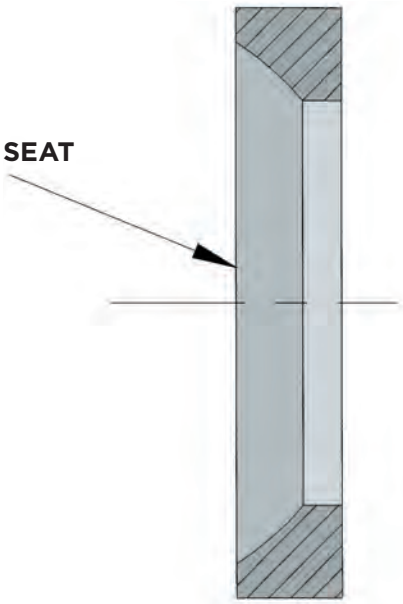

SEAT CODE "U" (UHMWPE)

Exhibits the same characteristics as the #6 seat with the exception that it utilizes the inner seat ring to enhance performance in abrasive services. UHMWPE should be used with caution in the presence of solvents, and the operating torque can be expected to be 30% higher than that of the PTFE based seat materials.
(FIGURE 1) SEE PRESSURE-TEMPERATURE CHART 4, PAGE 12.

SEAT CODE "8" (PEEK)

PEEK (PolyEtherEtherKetone) offers a high strength alternative to RPTFE, resistant to creep and cold flow. This seat offers good abrasion resistance. Higher in cost, this material offers similar chemical resistance to PTFE but should be checked on application. Operating torque tend to be 40% higher than RPTFE. Ball stop recommended.
(FIGURE 2) SEE PRESSURE-TEMPERATURE CHART 5, PAGE 13.

SEAT CODE "B" (CARBON REINFORCED PEEK)

Carbon Reinforced PEEK provides improved abrasion resistance when compared to the unfilled variety. Higher in cost, this material offers a broader temperature range than PTFE with similar chemical resistance but should be checked on application. Operating torque tends to be 40% higher than PTFE. Ball stop recommended.
(FIGURE 2) SEE PRESSURE-TEMPERATURE CHART 5, PAGE 13.

SEAT CODE "4" (CARBON GRAPHITE)

Designed for high temperature applications. A ball stop is required in applications above 500°F. Maximum service temperature is limited to 750°F in oxidizing applications. This seat like all rigid seat materials does not necessarily provide "bubble tight" shut-off. Most test standards have allowable leakage rates or list "classes" of shut-off for this type of seat. Be aware of the system design requirements when specifying this or any rigid seat. Ball stop recommended.
(FIGURE 1) SEE PRESSURE-TEMPERATURE CHART 2, PAGE 11.

SEAT CODE "H" (HIGH TEMPERATURE GRAPHITE)

Designed for very high temperature applications. A ball stop is required in applications above 500°F. Maximum service temperature is limited to 1000°F. This seat like other rigid seat materials does not provide "bubble tight" shut-off. This seat is not as abrasion resistant as the #4 version. Be aware of the system design requirements when specifying this or any rigid seat. Ball stop recommended.
(FIGURE 1) SEE PRESSURE-TEMPERATURE CHART 2, PAGE 11.

SEAT CODE "9" (CERAMIC)

Working in conjunction with a ceramic ball, this seat outperforms all other materials in throttling and abrasive applications. It possesses excellent chemical resistance. A ball stop is recommended for all applications. This seat like all rigid seat materials does not necessarily provide "bubble tight" shut-off. Most test standards have allowable leakage rates or list "classes" of shut-off for this type of seat. Be aware of the system design requirements when specifying this or any rigid seat.
(FIGURE 4) SEE PRESSURE-TEMPERATURE CHART 6, PAGE 13.

TOP ENTRY VALVES

PRESSURE/TEMPERATURE RATINGS

VALVE BODY RATING[1] – PSI									
TEMP °F	ASTM A216 GRADE WCB[2] CARBON STEEL			ASTM A351 GRADE CF8M[3] (CLOSE WROUGHT EQUIVALENT IS 316 SS)			ASTM A351 GRADE CF3M (CLOSE WROUGHT EQUIVALENT IS 316L SS)		
	CLASS 150	CLASS 300	CLASS 600	CLASS 1504	CLASS 300	CLASS 600	CLASS 150	CLASS 300	CLASS 600
-20 to 100	285	740	1480	275	720	1440	275	720	1440
200 F	260	680	1360	235	620	1240	235	620	1240
300 F	230	655	1310	215	560	1120	215	560	1120
400 F	200	635	1265	195	515	1025	195	515	1025
500 F	170	605	1205	170	480	955	170	480	955
600 F	140	570	1135	140	450	900	140	450	900
650 F	125	550	1100	125	440	885	125	440	885
700 F	110	530	1060	110	435	870	110	435	870
750 F	95	505	1015	95	425	855	95	425	855
800 F	80	410	825	80	420	845	80	420	845
850 F	65	320	640	65	420	835	65	420	835
900 F	50	230	460	50	415	830	50	415	830
950 F	35	135	275	35	385	775	35	385	775
1000 F	20	85	170	20	365	725	20	365	725
1050 F				20	360	720	20	360	720
1100 F				20	305	610	20	305	610
1150 F				20	235	475	20	235	475
1200 F				20	185	370	20	185	370
1250 F				20	145	295	20	145	295
1300 F				20	115	235	20	115	235
1350 F				20	95	190	20	95	190
1400 F				20	75	150	20	75	150
1450 F				20	60	115	20	60	115
1500 F				15	40	85	15	40	85

VALVE BODY RATING[1] – BAR									
TEMP °C	ASTM A216 GRADE WCB[2] CARBON STEEL			ASTM A351 GRADE CF8M[3] (CLOSE WROUGHT EQUIVALENT IS 316 SS)			ASTM A351 GRADE CF3M (CLOSE WROUGHT EQUIVALENT IS 316L SS)		
	CLASS 150	CLASS 300	CLASS 600	CLASS 1504	CLASS 300	CLASS 600	CLASS 150	CLASS 300	CLASS 600
-29 to 38 C	19.6 bar	51.1 bar	102.1 bar	19.0 bar	49.6 bar	99.3 bar	19.0 bar	49.6 bar	99.3 bar
50 C	19.2 bar	50.1 bar	100.2 bar	18.4 bar	48.1 bar	96.2 bar	18.4 bar	48.1 bar	96.2 bar
100 C	17.7 bar	46.6 bar	93.2 bar	16.2 bar	42.2 bar	84.4 bar	16.2 bar	42.2 bar	84.4 bar
150 C	15.8 bar	45.1 bar	90.2 bar	14.8 bar	38.5 bar	77.0 bar	14.8 bar	38.5 bar	77.0 bar
200 C	13.8 bar	43.8 bar	87.6 bar	13.7 bar	35.7 bar	71.3 bar	13.7 bar	35.7 bar	71.3 bar
250 C	12.1 bar	41.9 bar	83.9 bar	12.1 bar	33.4 bar	66.8 bar	12.1 bar	33.4 bar	66.8 bar
300 C	10.2 bar	39.8 bar	79.6 bar	10.2 bar	31.6 bar	63.2 bar	10.2 bar	31.6 bar	63.2 bar
325 C	9.3 bar	38.7 bar	77.4 bar	9.3 bar	30.9 bar	61.8 bar	9.3 bar	30.9 bar	61.8 bar
350 C	8.4 bar	37.6 bar	75.1 bar	8.4 bar	30.3 bar	60.7 bar	8.4 bar	30.3 bar	60.7 bar
375 C	7.4 bar	36.4 bar	72.7 bar	7.4 bar	29.9 bar	59.8 bar	7.4 bar	29.9 bar	59.8 bar
400 C	6.5 bar	34.7 bar	69.4 bar	6.5 bar	29.4 bar	58.9 bar	6.5 bar	29.4 bar	58.9 bar
425 C	5.5 bar	28.8 bar	57.5 bar	5.5 bar	29.1 bar	58.3 bar	5.5 bar	29.1 bar	58.3 bar
450 C	4.6 bar	23.0 bar	46.0 bar	4.6 bar	28.8 bar	57.7 bar	4.6 bar	28.8 bar	57.7 bar
475 C	3.7 bar	17.4 bar	34.9 bar	3.7 bar	28.7 bar	57.3 bar	3.7 bar	28.7 bar	57.3 bar
500 C	2.8 bar	11.8 bar	23.5 bar	2.8 bar	28.2 bar	56.5 bar	2.8 bar	28.2 bar	56.5 bar
538 C	1.4 bar	5.9 bar	11.8 bar	1.4 bar	25.2 bar	50.0 bar	1.4 bar	25.2 bar	50.0 bar
550 C				1.4 bar	25.0 bar	49.8 bar	1.4 bar	25.0 bar	49.8 bar
575 C				1.4 bar	24.0 bar	47.9 bar	1.4 bar	24.0 bar	47.9 bar
600 C				1.4 bar	19.9 bar	39.8 bar	1.4 bar	19.9 bar	39.8 bar
625 C				1.4 bar	15.8 bar	31.6 bar	1.4 bar	15.8 bar	31.6 bar
650 C				1.4 bar	12.7 bar	25.3 bar	1.4 bar	12.7 bar	25.3 bar
675 C				1.4 bar	10.3 bar	20.6 bar	1.4 bar	10.3 bar	20.6 bar
700 C				1.4 bar	8.4 bar	16.8 bar	1.4 bar	8.4 bar	16.8 bar
725 C				1.4 bar	7.0 bar	14.0 bar	1.4 bar	7.0 bar	14.0 bar
750 C				1.4 bar	5.9 bar	11.7 bar	1.4 bar	5.9 bar	11.7 bar
775 C				1.4 bar	4.6 bar	9.0 bar	1.4 bar	4.6 bar	9.0 bar
800 C				1.2 bar	3.5 bar	7.0 bar	1.2 bar	3.5 bar	7.0 bar
816 C				1.0 bar	2.8 bar	5.9 bar	1.0 bar	2.8 bar	5.9 bar

1. *Ratings per ASME B16.34 - 2009*
2. *WCB: Upon prolonged exposure to temperatures above 800°F (425°C), the carbide phase of steel may be converted to graphite. Permissible, but not recommended for prolonged usage above 800°F (425°C)*
3. *CF8M: At temperatures above 1000°F (538°C), use only when the carbon content is 0.04% or higher.*
4. *CF8M Class 150: Flanged End valve ratings terminate at 1000°F (538°C)*

TOP ENTRY VALVES

PRESSURE/TEMPERATURE RATINGS

VALVE BODY RATING[1] – PSI									
TEMP °F	ASTM A351 GRADE CN7M (CLOSE WROUGHT EQUIVALENT IS ALLOY 20)			ASTM A494 GRADE CW-12MW (CLOSE WROUGHT EQUIVALENT IS HASTELLOY® C)			ASTM A494 GRADE M-35-1 (CLOSE WROUGHT EQUIVALENT IS MONEL®)		
	CLASS 150	CLASS 300	CLASS 600	CLASS 150	CLASS 300	CLASS 600	CLASS 150	CLASS 300	CLASS 600
-20 to 100	230	600	1200	230	600	1200	230	600	1200
200 F	200	520	1035	210	550	1105	200	525	1050
300 F	180	465	930	200	520	1040	190	490	980
400 F	160	420	845	190	490	980	180	475	945
500 F	150	390	780	170	465	925	170	475	945
600 F	140	360	720	140	440	880	140	475	945
650 F				125	430	860	125	475	945
700 F				110	420	835	110	470	940
750 F				95	410	820	95	465	930
800 F				80	400	800	80	460	915
850 F				65	395	785	65	375	755
900 F				50	385	775	50	275	550
950 F				35	380	760			
1000 F				20	365	725			
1050 F				20	350	700			
1100 F				20	325	645			
1150 F				20	275	550			
1200 F				20	205	410			
1250 F				20	180	365			
1300 F				20	140	275			
1350 F				20	105	205			
1400 F				20	75	150			
1450 F				20	60	115			
1500 F				15	40	85			

VALVE BODY RATING[1] – BAR									
TEMP °C	ASTM A351 GRADE CN7M (CLOSE WROUGHT EQUIVALENT IS ALLOY 20)			ASTM A494 GRADE CW-12MW (CLOSE WROUGHT EQUIVALENT IS HASTELLOY® C)			ASTM A494 GRADE M-35-1 (CLOSE WROUGHT EQUIVALENT IS MONEL®)		
	CLASS 150	CLASS 300	CLASS 600	CLASS 150	CLASS 300	CLASS 600	CLASS 150	CLASS 300	CLASS 600
-29 to 38 C	15.9 bar	41.4 bar	82.7 bar	15.9 bar	41.4 bar	82.7 bar	15.9 bar	41.4 bar	82.7 bar
50 C	15.4 bar	40.1 bar	80.3 bar	15.6 bar	40.6 bar	81.3 bar	15.4 bar	40.2 bar	80.5 bar
100 C	13.5 bar	35.3 bar	70.6 bar	14.5 bar	37.8 bar	75.6 bar	13.8 bar	35.9 bar	71.9 bar
150 C	12.3 bar	32.0 bar	64.1 bar	13.7 bar	35.9 bar	71.7 bar	12.9 bar	33.7 bar	67.5 bar
200 C	11.3 bar	29.4 bar	58.7 bar	13.0 bar	33.9 bar	67.9 bar	12.5 bar	32.7 bar	65.4 bar
250 C	10.4 bar	27.2 bar	54.4 bar	12.1 bar	32.3 bar	64.5 bar	12.1 bar	32.6 bar	65.2 bar
300 C	9.7 bar	25.4 bar	50.8 bar	10.2 bar	30.7 bar	61.5 bar	10.2 bar	32.6 bar	65.2 bar
325 C	9.3 bar	24.4 bar	48.8 bar	9.3 bar	30.1 bar	60.1 bar	9.3 bar	32.6 bar	65.2 bar
350 C				8.4 bar	29.4 bar	58.8 bar	8.4 bar	32.6 bar	65.1 bar
375 C				7.4 bar	28.7 bar	57.4 bar	7.4 bar	32.4 bar	64.8 bar
400 C				6.5 bar	28.3 bar	56.5 bar	6.5 bar	32.1 bar	64.2 bar
425 C				5.5 bar	27.7 bar	55.3 bar	5.5 bar	31.6 bar	63.3 bar
450 C				4.6 bar	27.2 bar	54.4 bar	4.6 bar	26.9 bar	53.8 bar
475 C				3.7 bar	26.8 bar	53.5 bar	3.7 bar	20.8 bar	41.5 bar
500 C				2.8 bar	26.3 bar	52.6 bar			
538 C				1.4 bar	25.2 bar	50.0 bar			
550 C				1.4 bar	25.0 bar	49.8 bar			
575 C				1.4 bar	24.0 bar	47.9 bar			
600 C				1.4 bar	21.6 bar	42.9 bar			
625 C				1.4 bar	18.3 bar	36.6 bar			
650 C				1.4 bar	14.1 bar	28.1 bar			
675 C				1.4 bar	12.4 bar	25.2 bar			
700 C				1.4 bar	10.1 bar	20.0 bar			
725 C				1.4 bar	7.9 bar	15.4 bar			
750 C				1.4 bar	5.9 bar	11.7 bar			
775 C				1.4 bar	4.6 bar	9.0 bar			
800 C				1.4 bar	3.5 bar	7.0 bar			
816 C				1.0 bar	2.8 bar	5.9 bar			

1. Ratings per ASME B16.34 - 2009

TOP ENTRY VALVES

PRESSURE/TEMPERATURE RATINGS

VALVE BODY RATING[1] – PSI						
TEMP °F	ASTM A351 CK3MCUN (CLOSE WROUGHT EQUIVALENT IS 254 SMO)			ASTM A351 CG8M (CLOSE WROUGHT EQUIVALENT IS 317SS)		
	CLASS 150	CLASS 300	CLASS 600	CLASS 150	CLASS 300	CLASS 600
-20 to 100 F	290	750	1500	275	720	1440
200 F	260	745	1490	235	620	1240
300 F	230	665	1335	215	560	1120
400 F	200	615	1230	195	515	1025
500 F	170	580	1160	170	480	955
600 F	140	555	1115	140	450	900
650 F	125	545	1095	125	440	885
700 F	110	540	1085	110	435	870
750 F	95	530	1065	95	425	855
800 F				80	420	845
850 F				65	420	835
900 F				50	415	830
950 F				35	385	775
1000 F				20	365	725
1050 F				20	360	720
1100 F				20	305	610
1150 F				20	235	475
1200 F				20	185	370
1250 F				20	145	295
1300 F				20	115	235
1350 F				20	95	190
1400 F				20	75	150
1450 F				20	60	115
1500 F				15	40	85

VALVE BODY RATING[1] – BAR						
TEMP °C	ASTM A351 CK3MCUN (CLOSE WROUGHT EQUIVALENT IS 254 SMO)			ASTM A351 CG8M (CLOSE WROUGHT EQUIVALENT IS 317SS)		
	CLASS 150	CLASS 300	CLASS 600	CLASS 150	CLASS 300	CLASS 600
-29 to 38 C	20.0 bar	51.7 bar	103.4 bar	19.0 bar	49.6 bar	99.3 bar
50 C	19.5 bar	51.7bar	103.4 bar	18.4 bar	48.1 bar	96.2 bar
100 C	17.7 bar	50.7 bar	101.3 bar	16.2 bar	42.2 bar	84.4 bar
150 C	15.8 bar	45.9 bar	91.9 bar	14.8 bar	38.5 bar	77.0 bar
200 C	13.8 bar	42.7 bar	85.3 bar	13.7 bar	35.7 bar	71.3 bar
250 C	12.1 bar	40.5 bar	80.9 bar	12.1 bar	33.4 bar	66.8 bar
300 C	10.2 bar	38.9 bar	77.7 bar	10.2 bar	31.6 bar	63.2 bar
325 C	9.3 bar	38.2 bar	76.3 bar	9.3 bar	30.9 bar	61.8 bar
350 C	8.4 bar	37.6 bar	75.3 bar	8.4 bar	30.3 bar	60.7 bar
375 C	7.4 bar	37.4 bar	74.7 bar	7.4 bar	29.9 bar	59.8 bar
400 C	6.5 bar	36.5 bar	73.3 bar	6.5 bar	29.4 bar	58.9 bar
425 C				5.5 bar	29.1 bar	58.3 bar
450 C				4.6 bar	28.8 bar	57.7 bar
475 C				3.7 bar	28.7 bar	57.3 bar
500 C				2.8 bar	28.2 bar	56.5 bar
538 C				1.4 bar	25.2 bar	50.0 bar
550 C				1.4 bar	25 bar	49.8 bar
575 C				1.4 bar	24 bar	47.9 bar
600 C				1.4 bar	19.9 bar	39.8 bar
625 C				1.4 bar	15.8 bar	31.6 bar
650 C				1.4 bar	12.7 bar	25.3 bar
675 C				1.4 bar	10.3 bar	20.6 bar
700 C				1.4 bar	8.4 bar	16.8 bar
725 C				1.4 bar	7.0 bar	14.0 bar
750 C				1.4 bar	5.9 bar	11.7 bar
775 C				1.4 bar	4.6 bar	9.0 bar
800 C				1.2 bar	3.5 bar	7.0 bat
816 C				1.0 bar	2.8 bar	5.9 bar

1. Ratings per ASME B16.34 - 2009

CONTACT FACTORY
INCONEL 625 ASTM A494-GR CW6MC
NICKEL 200 ASTM A494-CZ100

aalberts integrated piping systems

TOP ENTRY VALVES

PRESSURE/TEMPERATURE RATINGS

CHART 1 PFA, TFM, SRTFE

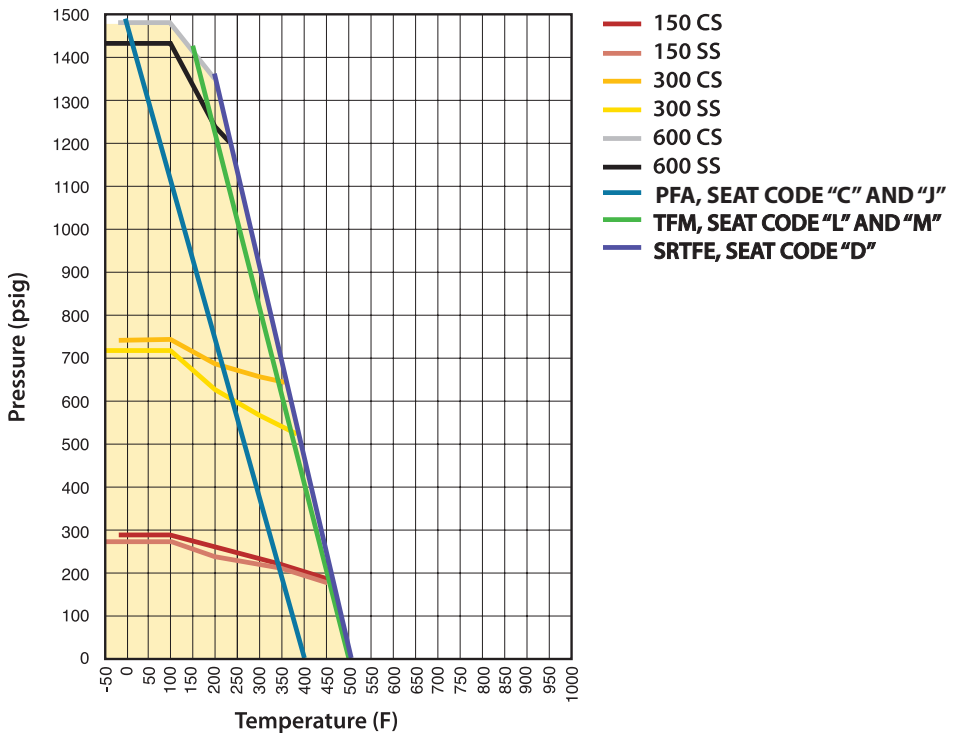

CHART 2 GRAPHITE, BRONZE-MOLY

STEAM RATED SEATS

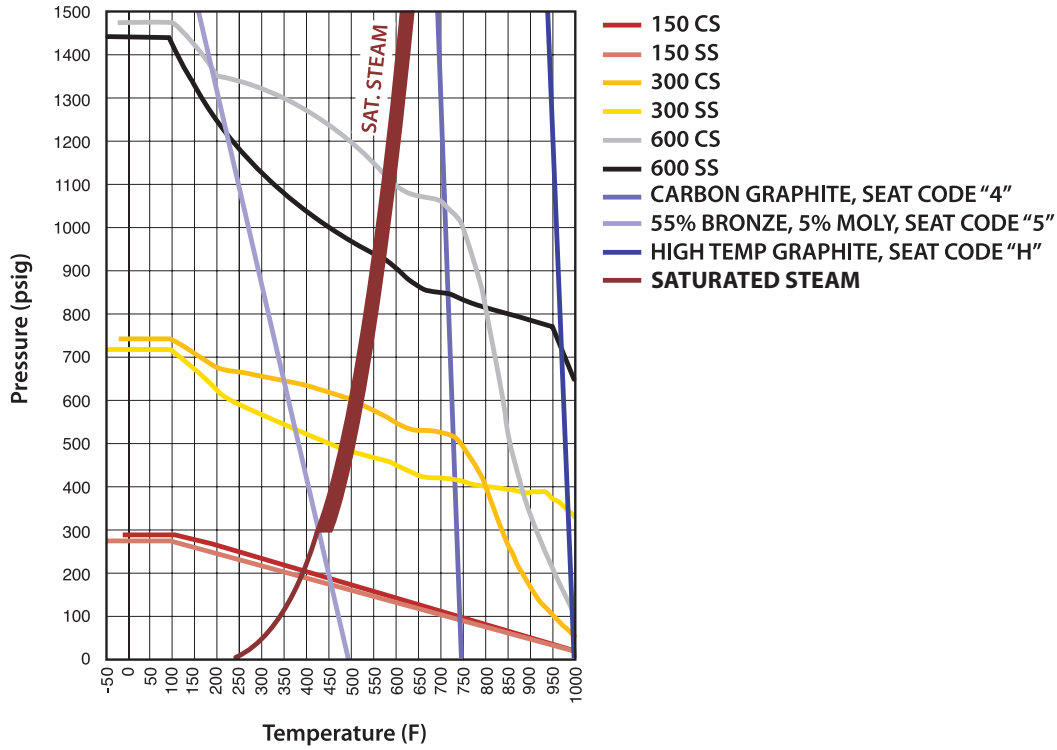

TOP ENTRY VALVES

PRESSURE/TEMPERATURE RATINGS

CHART 3 NYLON, PCTFE

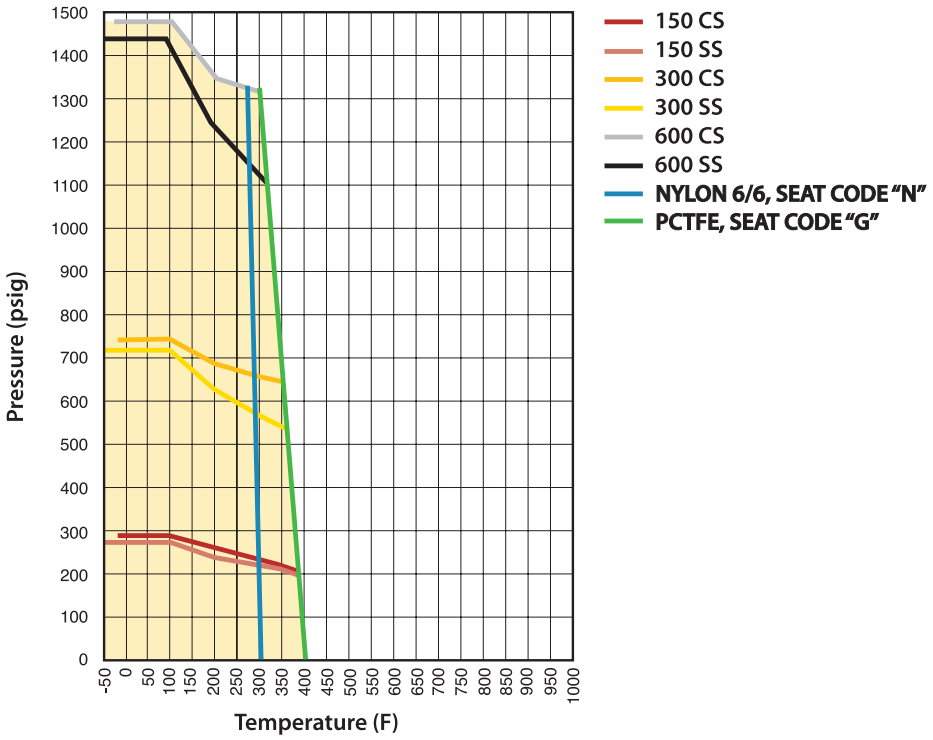

CHART 4 UHMWPE SEATS

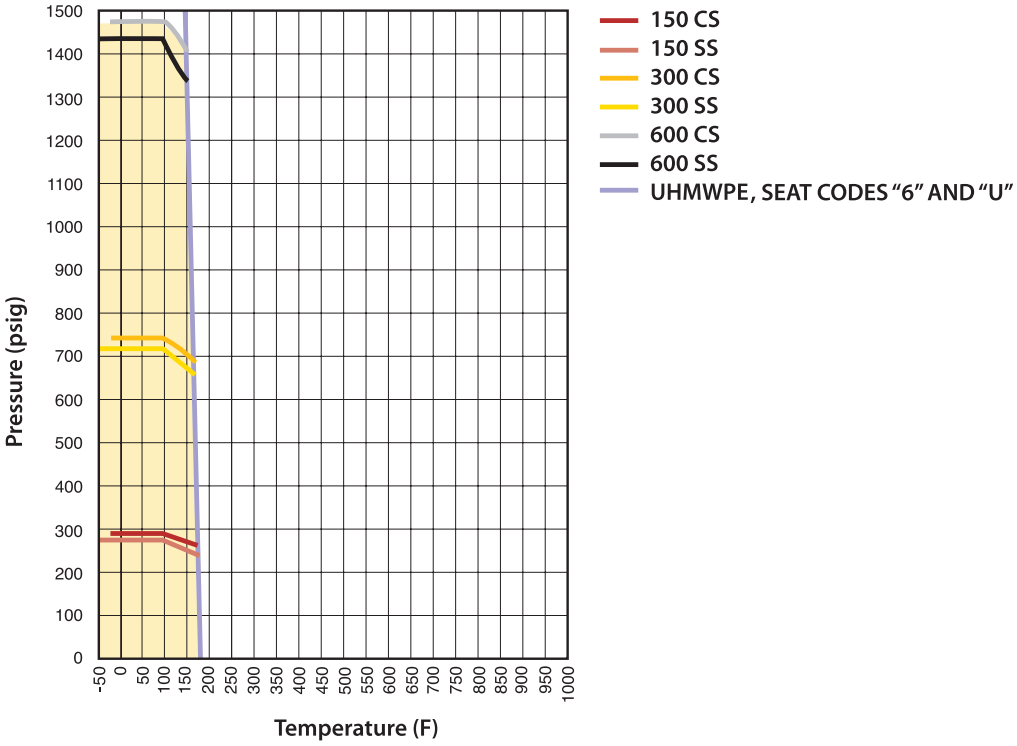

TOP ENTRY VALVES

PRESSURE/TEMPERATURE RATINGS

CHART 5 PEEK SEATS

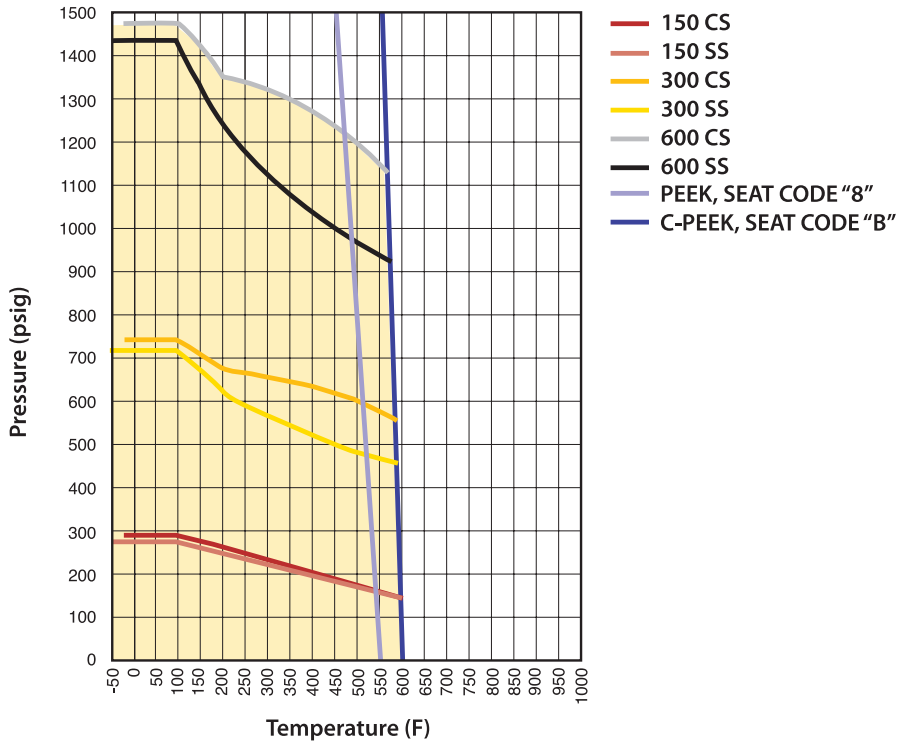

CHART 6 CERAMIC SEATS

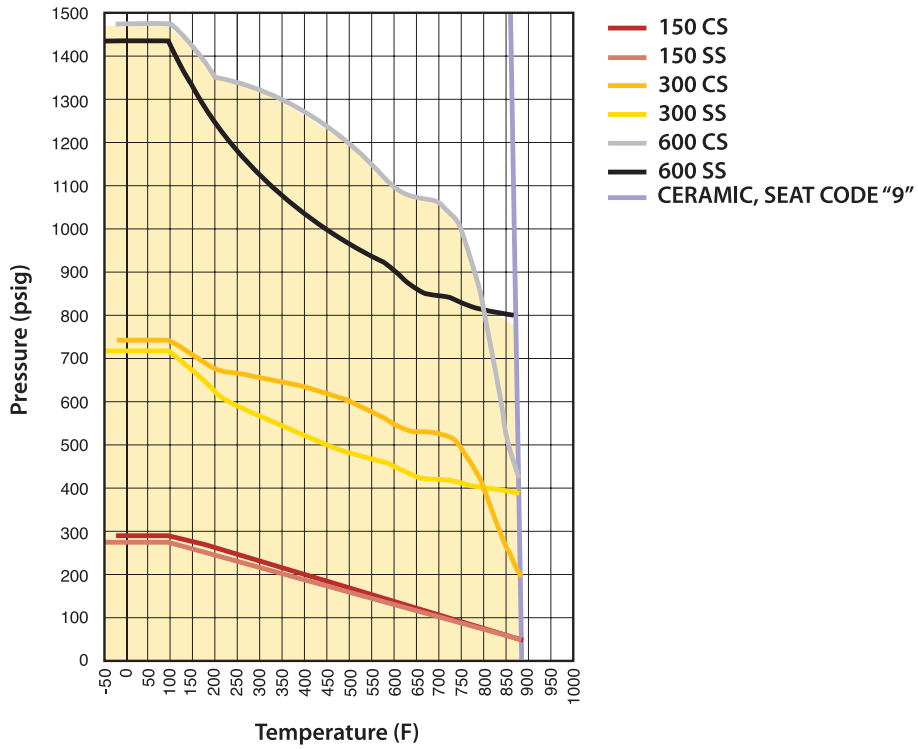

ASME CLASS, FLANGED, STANDARD PORT

DIMENSIONS

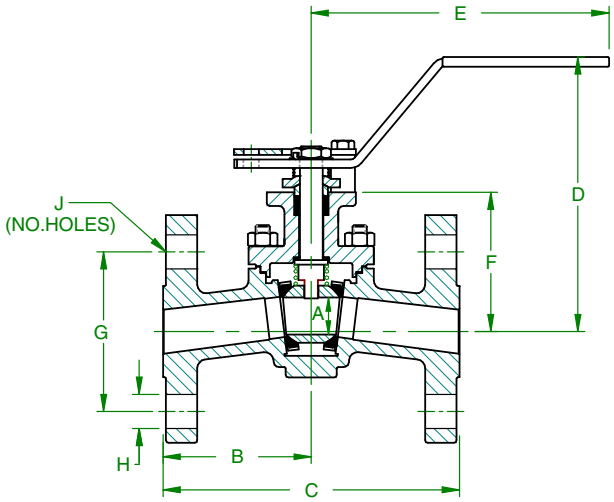

FIGURE 1

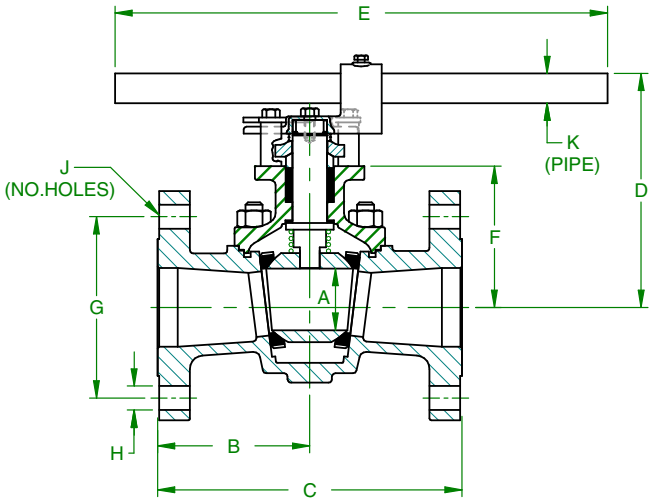

FIGURE 2

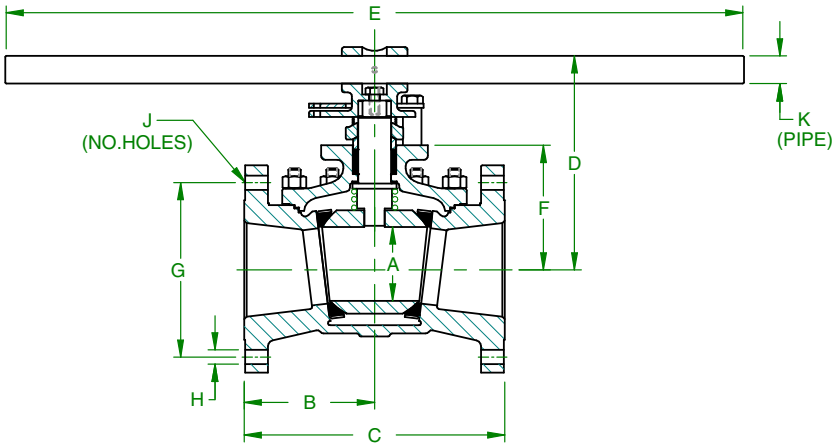

FIGURE 3

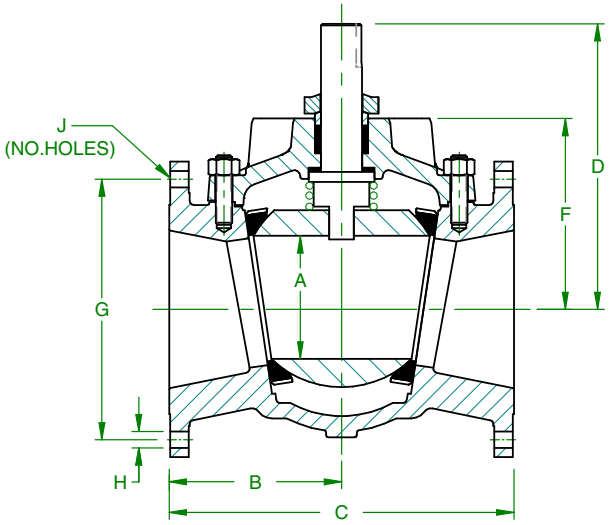

FIGURE 4

ASME CLASS, FLANGED, STANDARD PORT

DIMENSIONS

ASME CLASS 150, FLANGED, STANDARD PORT

DIMENSIONS IN INCHES

FIGURE	SIZE	A	B	C	D	E	F	G	H	J	K
1	1/2"	0.81	2.85	5.69	5.85	6.56	2.88	2.38	0.62	4	NA
	3/4"	0.81	2.31	4.62	5.91	6.56	2.94	2.75	0.62	4	NA
	1"	0.81	2.50	5.00	5.94	6.56	2.97	3.12	0.62	4	NA
	1.5"	1.17	3.25	6.50	5.63	6.65	3.41	3.87	0.62	4	NA
	2"	1.50	3.50	7.00	6.54	8.40	4.24	4.75	0.75	4	NA
2	3"	2.25	4.00	8.00	8.55	18.00	5.16	6.00	0.75	4	3/4" SCH.40
	4"	3.00	4.50	9.00	8.68	30.00	5.29	7.50	0.75	8**	3/4" SCH.40
3	6"*	4.50	7.75	15.50	13.04	45.00	7.59	9.50	0.87	8	1.25" SCH.80
	8"*	6.00	9.00	18.00	14.24	45.00	8.79	11.75	0.87	8	1.25" SCH.80
4	10"*	7.50	10.50	21.00	17.40****	NA	11.63	14.25	1.00	12	NA
	12"*	9.00	12.00	24.00	19.46****	NA	13.69	17.00	1.00	12***	NA

** Gear Operator or Actuation Recommended*
*** Top (2) holes in each flange are tapped 5/8-11 UNC-2B*
**** Top (4) holes in each flange are tapped 7/8-9 UN-2B*
***** Dimension to top of stem (No handle)*

ASME CLASS 300, FLANGED, STANDARD PORT

DIMENSIONS IN INCHES

FIGURE	SIZE	A	B	C	D	E	F	G	H	J	K
1	1/2"	0.81	2.85	5.69	5.85	6.56	2.88	2.62	0.62	4	NA
	3/4"	0.81	3.00	6.00	6.00	6.56	3.03	3.25	0.75	4	NA
	1"	0.81	3.25	6.50	6.03	6.56	3.06	3.50	0.75	4	NA
	1.5"	1.17	3.75	7.50	5.69	6.65	3.47	4.50	0.88	4	NA
	2"	1.50	4.25	8.50	6.63	8.40	4.33	5.00	0.75	8	NA
2	3"	2.25	5.56	11.13	8.55	18.00	5.16	6.63	0.88	8	3/4" SCH.40
	4"	3.00	6.00	12.00	8.68	30.00	5.29	7.88	0.88	8	3/4" SCH.40
3	6"*	4.50	7.94	15.87	13.04	45.00	7.59	10.63	0.88	12	1.25" SCH.80
	8"*	6.00	9.87	19.75	14.24	45.00	8.79	13.00	1.00	12	1.25" SCH.80
4	10"*	7.50	11.19	22.38	17.40***	NA	11.63	15.25	1.13	16	NA
	12"*	9.00	12.75	25.50	19.46***	NA	13.69	17.75	1.25	16**	NA

**Gear Operator or Actuation Recommended*
***Top 6 holes in each flange are tapped 1-1/8-8 UN-2B*
**** Dimension to top of stem (No handle)*

ASME CLASS 600, FLANGED, STANDARD PORT

DIMENSIONS IN INCHES

FIGURE	SIZE	A	B	C	D	E	F	G	H	J	K
1	1/2"	0.81	3.63	7.25	5.63	6.65	3.41	2.62	0.62	4	NA
	3/4"	0.81	3.75	7.50	5.87	6.65	3.65	3.25	0.75	4	NA
	1"	0.81	4.25	8.50	5.92	6.65	3.71	3.50	0.75	4	NA
	1.5"	1.17	4.75	9.50	6.21	8.40	3.91	4.50	0.88	4	NA
	2"	1.50	5.75	11.50	7.01	8.40	4.70	5.00	0.75	8	NA
2	3"	2.25	7.00	14.00	8.78	18.00	5.38	6.63	0.88	8	3/4" SCH.40
	4"*	3.00	8.50	17.00	9.08	30.00	5.69	8.50	1.00	8	3/4" SCH.40
3	6"*	4.50	11.00	22.00	13.29	45.00	7.84	11.50	1.12	12	1.25" SCH.80
	8"*	6.00	13.00	26.00	15.24	45.00	9.79	13.75	1.25	12	1.25" SCH.80

**Gear Operator or Actuation Recommended.*

ASME CLASS 300, SOCKET WELD, STANDARD PORT

DIMENSIONS

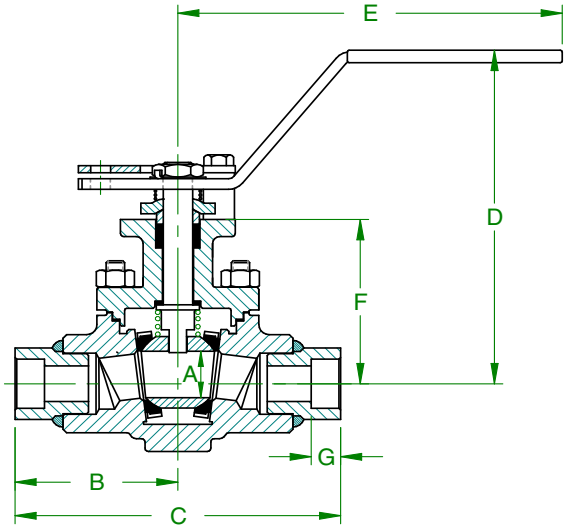

FIGURE 1

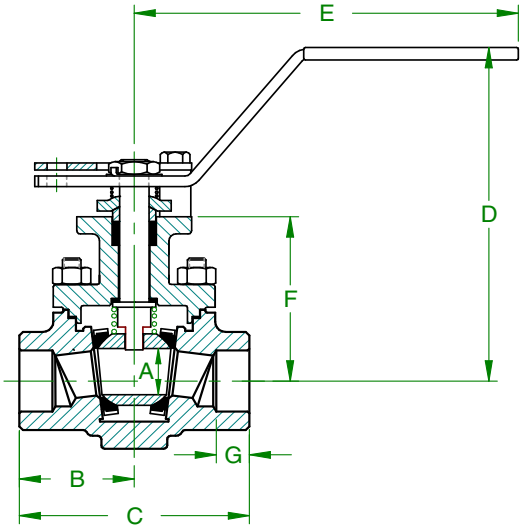

FIGURE 2

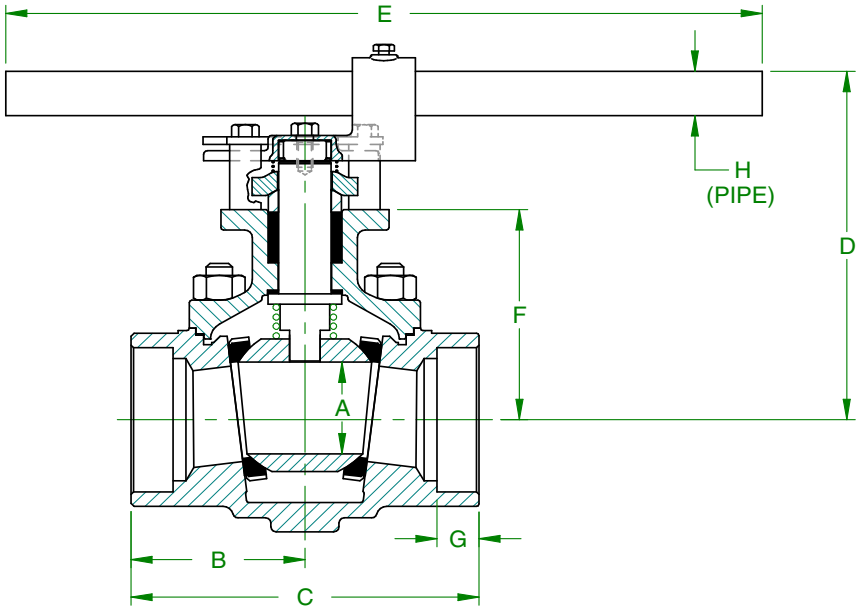

FIGURE 3

ASME CLASS 300, SOCKET WELD, STANDARD PORT

DIMENSIONS IN INCHES

FIGURE	SIZE	A	B	C	D	E	F	G	H
1	1/4"	0.81	2.77	5.54	5.84	6.56	2.88	0.50	NA
	1/2"	0.81	2.77	5.54	5.84	6.56	2.88	0.50	NA
2	3/4"	0.81	1.96	3.91	5.84	6.56	2.88	0.56	NA
	1"	0.81	1.96	3.91	5.84	6.56	2.88	0.50	NA
	1.5"	1.17	2.49	4.98	5.57	6.65	3.36	0.55	NA
	2"	1.50	2.86	5.72	6.36	8.40	4.06	0.62	NA
3	3"	2.25	4.14	8.28	8.55	18.00	5.16	1.00	3/4" SCH.40

aalberts integrated piping systems

ASME CLASS 600, SOCKET WELD, STANDARD PORT

DIMENSIONS

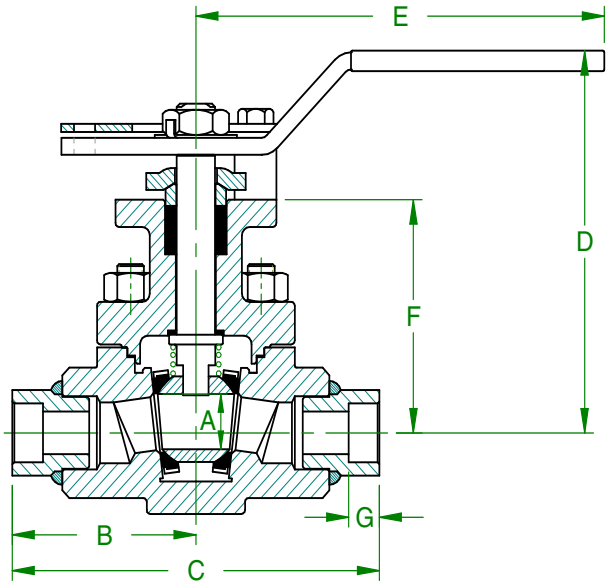

FIGURE 1

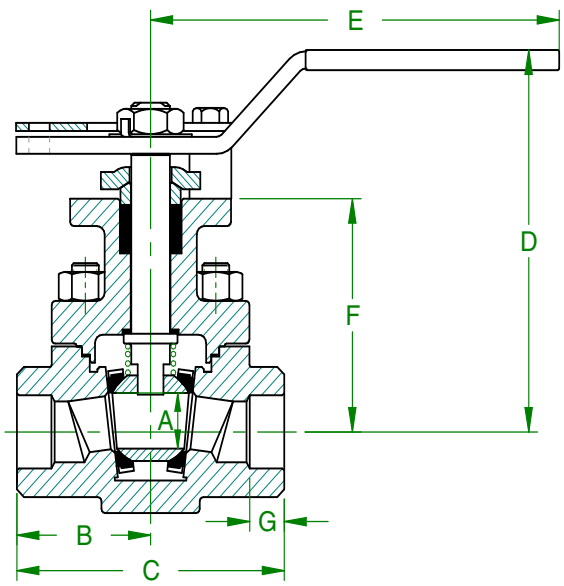

FIGURE 2

ASME CLASS 600, SOCKET WELD, STANDARD PORT

DIMENSIONS IN INCHES

FIGURE	SIZE	A	B	C	D	E	F	G
1	1/4"	0.81	2.99	5.98	5.63	6.65	3.41	0.50
	1/2"	0.81	2.99	5.98	5.63	6.65	3.41	0.50
2	3/4"	0.81	2.18	4.35	5.63	6.65	3.41	0.56
	1"	0.81	2.18	4.35	5.63	6.65	3.41	0.50
	1.5"	1.17	2.62	5.23	5.98	8.40	3.68	0.55
	2"	1.50	2.99	5.98	6.57	8.40	4.27	0.62

ASME CLASS 300, NPT, STANDARD PORT

DIMENSIONS

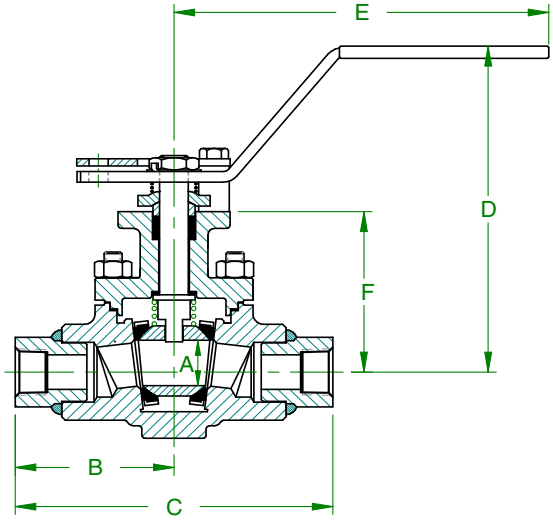

FIGURE 1

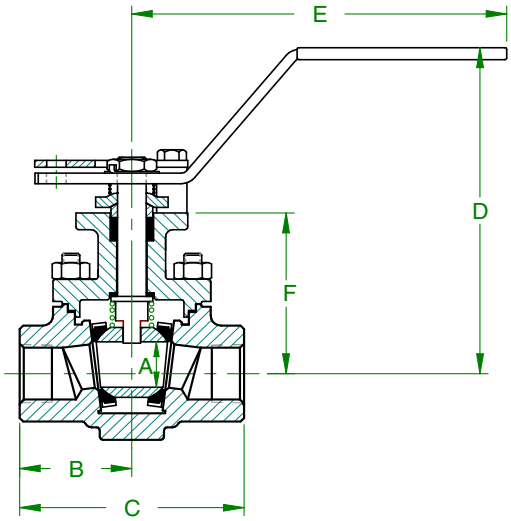

FIGURE 2

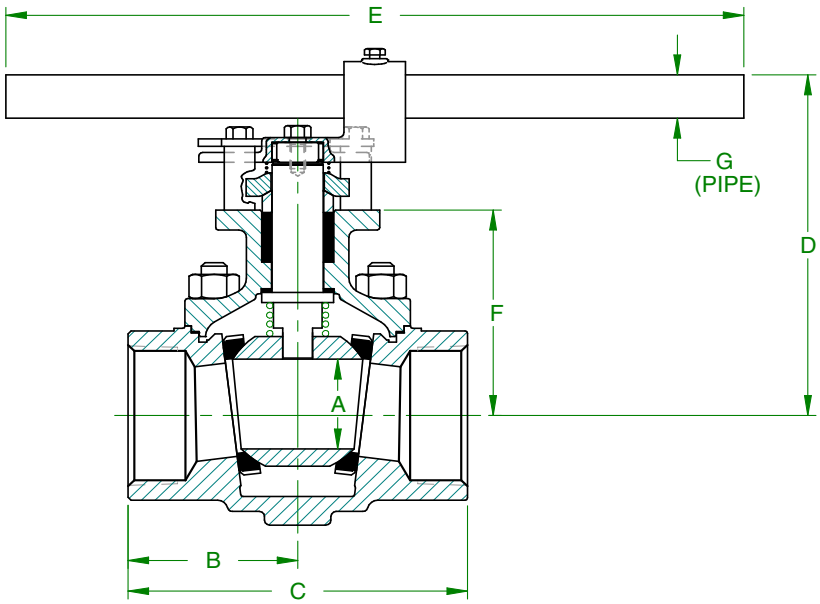

FIGURE 3

ASME CLASS 300, NPT, STANDARD PORT

DIMENSIONS IN INCHES

FIGURE	SIZE	A	B	C	D	E	F	G
1	1/4"	0.81	2.77	5.54	5.84	6.56	2.88	NA
	1/2"	0.81	2.77	5.54	5.84	6.56	2.88	NA
2	3/4"	0.81	1.96	3.91	5.84	6.56	2.88	NA
	1"	0.81	1.96	3.91	5.84	6.56	2.88	NA
	1.5"	1.17	2.49	4.98	5.57	6.65	3.36	NA
	2"	1.50	2.86	5.72	6.36	8.40	4.06	NA
3	3"	2.25	4.14	8.28	8.55	18.00	5.16	3/4" SCH.40

ASME CLASS 600, NPT, STANDARD PORT

DIMENSIONS

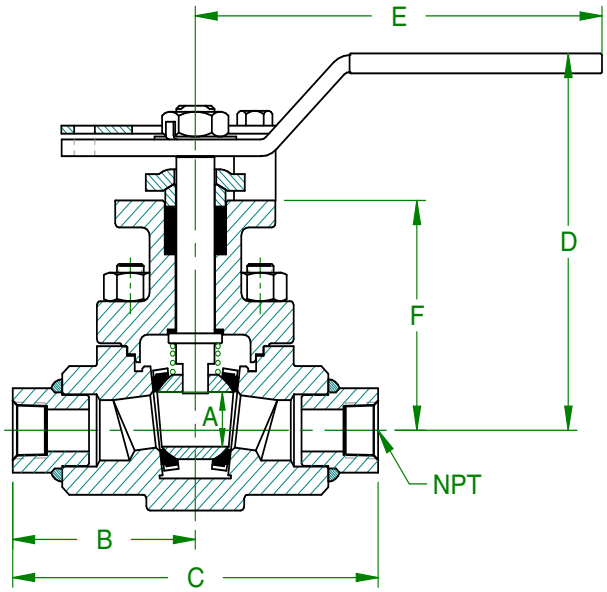

FIGURE 3

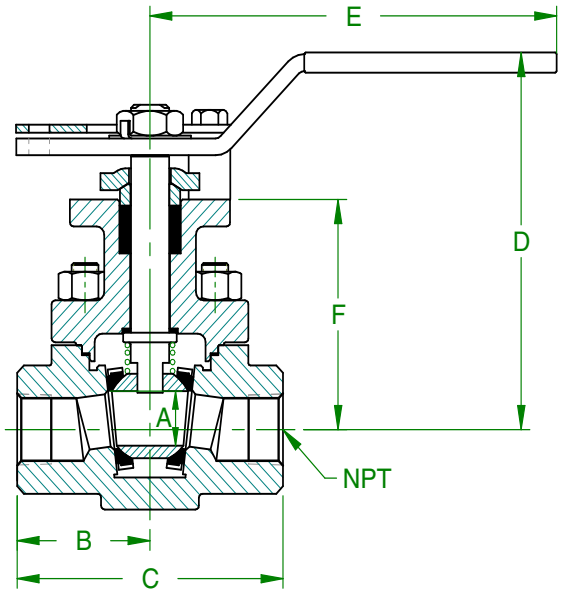

FIGURE 4

ASME CLASS 600, NPT, STANDARD PORT

DIMENSIONS IN INCHES

FIGURE	SIZE	A	B	C	D	E	F
3	1/4"	0.81	2.99	5.98	5.63	6.65	3.41
	1/2"	0.81	2.99	5.98	5.63	6.65	3.41
4	3/4"	0.81	2.18	4.35	5.63	6.65	3.41
	1"	0.81	2.18	4.35	5.63	6.65	3.41
	1.5"	1.17	2.62	5.23	5.98	8.40	3.68
	2"	1.50	2.99	5.98	6.57	8.40	4.27

ASME CLASS 300, BUTT WELD, STANDARD PORT

DIMENSIONS

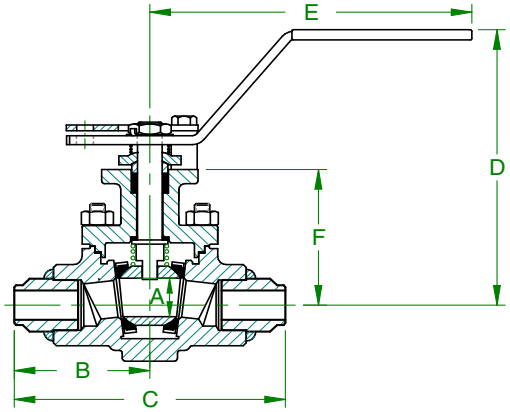

FIGURE 1

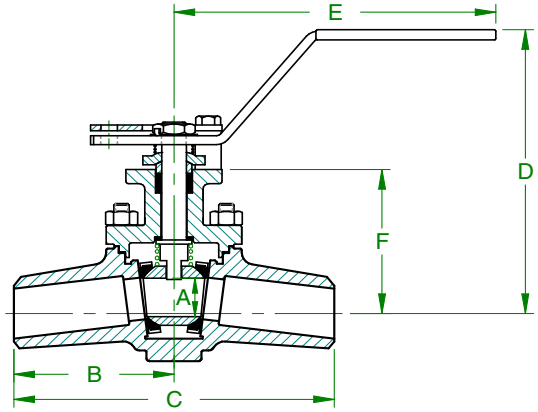

FIGURE 2

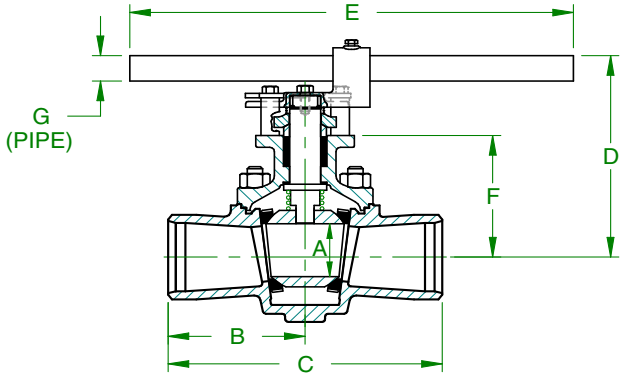

FIGURE 3

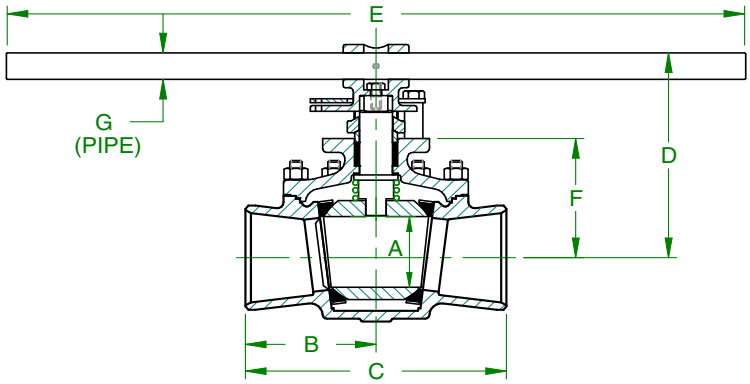

FIGURE 4

ASME CLASS 300, BUTT WELD, STANDARD PORT

DIMENSIONS IN INCHES

FIGURE	SIZE	A	B	C	D	E	F	G
1	1/2"	0.81	2.75	5.50	5.84	6.56	2.88	NA
2	3/4"	0.81	3.00	6.00	5.99	6.56	3.03	NA
	1"	0.81	3.25	6.50	6.02	6.56	3.06	NA
	1.5"	1.17	3.75	7.50	5.62	6.65	3.40	NA
	2"	1.50	4.25	8.50	6.64	8.40	4.34	NA
3	3"	2.25	5.56	11.12	8.55	18.00	5.16	3/4" SCH.40
	4"	3.00	6.03	12.06	8.68	30.00	5.29	3/4" SCH.80
4	6"	4.50	7.94	15.88	13.04	45.00	7.59	1.25" SCH.80
	8"	6.00	10.25	20.50	14.43	45.00	9.00	1.25" SCH.80

ASME CLASS 600, BUTT WELD, STANDARD PORT

DIMENSIONS

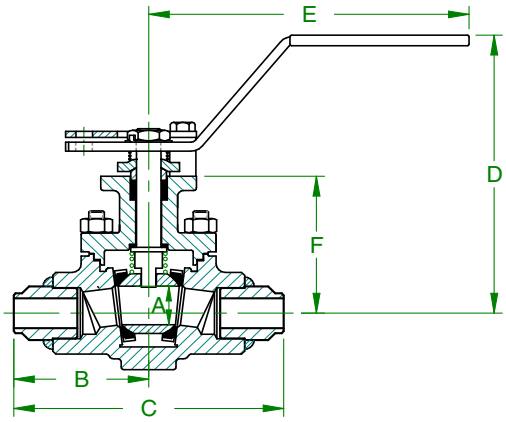

FIGURE 1

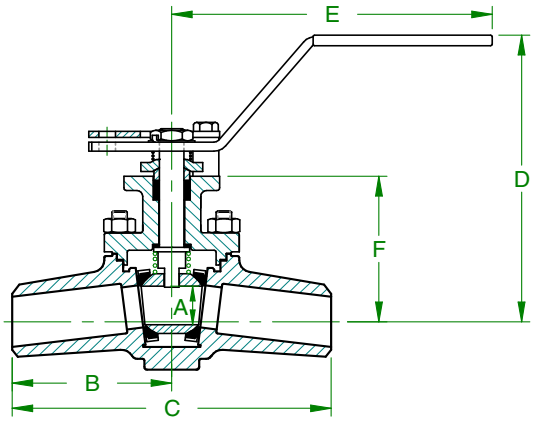

FIGURE 2

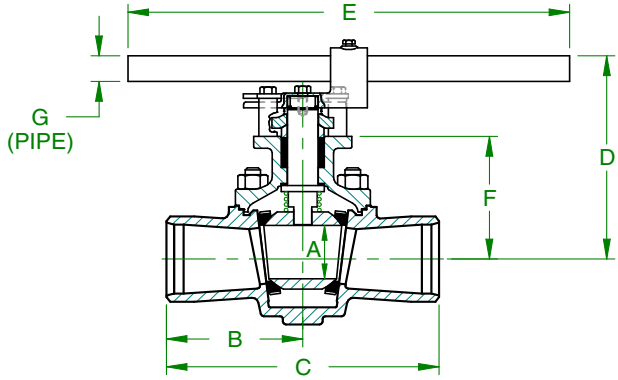

FIGURE 3

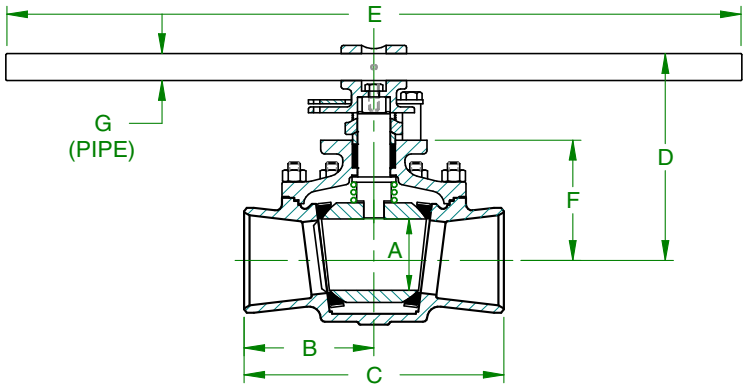

FIGURE 4

ASME CLASS 600, BUTT WELD, STANDARD PORT

DIMENSIONS IN INCHES

FIGURE	SIZE	A	B	C	D	E	F	G
1	1/2"	0.81	3.25	6.50	5.63	6.65	3.41	NA
2	3/4"	0.81	3.75	7.50	5.87	6.65	3.66	NA
	1"	0.81	4.25	8.50	5.93	6.65	3.72	NA
	1.5"	1.17	4.75	9.50	6.22	8.40	3.92	NA
	2"	1.50	5.75	11.50	7.03	8.40	4.73	NA
3	3"	2.25	7.00	14.00	8.78	18.00	5.38	3/4" SCH.40
	4"	3.00	8.50	17.00	9.08	30.00	5.69	3/4" SCH.80
4	6"	4.50	11.00	22.00	13.29	45.00	7.84	1.25" SCH.80

ASME CLASS 150-600, FLANGED, FULL PORT

DIMENSIONS

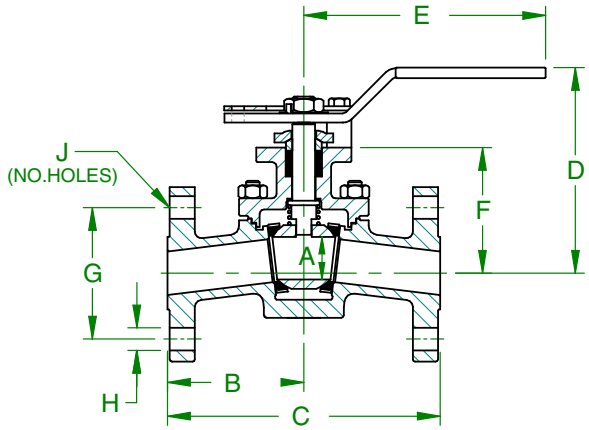

FIGURE 1

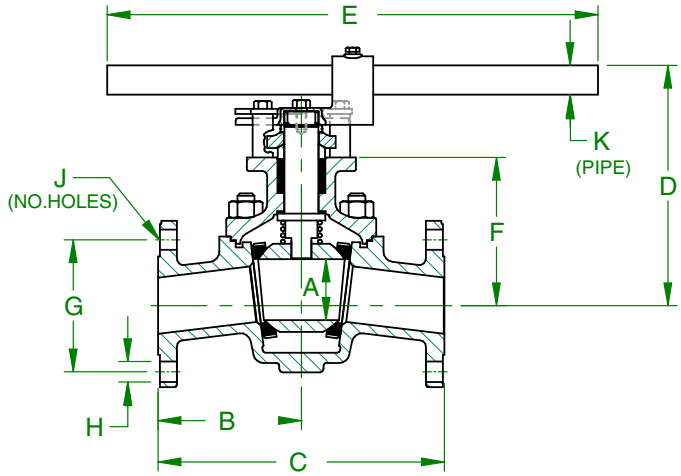

FIGURE 2

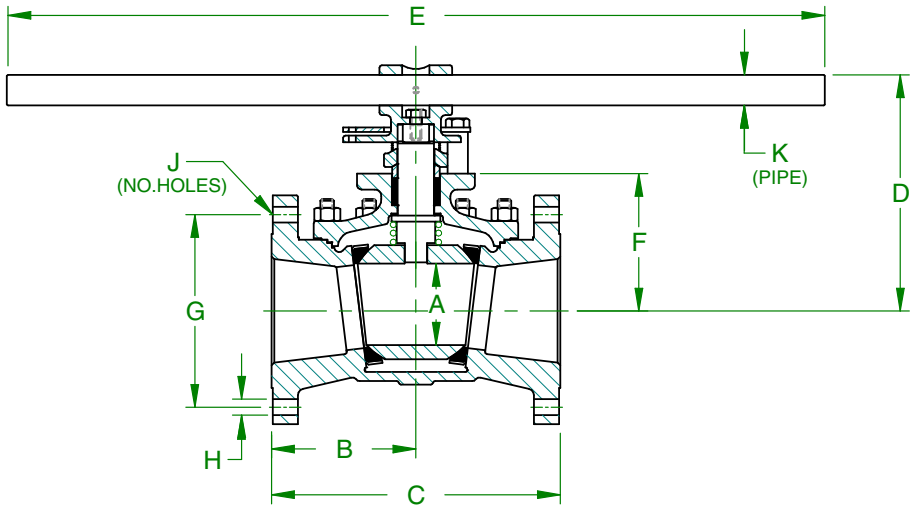

FIGURE 3

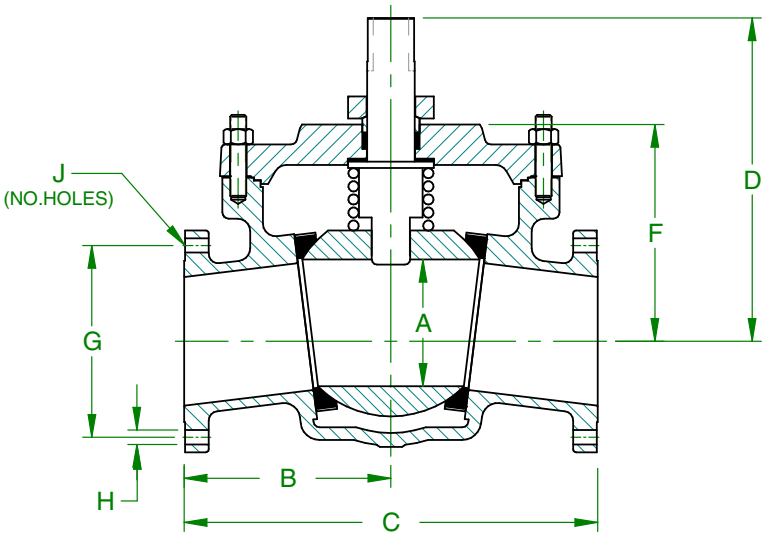

FIGURE 4

aalberts integrated piping systems

ASME CLASS 150-600, FLANGED, FULL PORT

DIMENSIONS

ASME CLASS 150, FLANGED, FULL PORT

DIMENSIONS IN INCHES

FIGURE	SIZE	A	B	C	D	E	F	G	H	J	K
1	1"	1.17	3.50	7.00	5.66	6.65	3.44	3.12	0.62	4	NA
	1.5"	1.50	4.37	8.75	6.65	8.40	4.35	3.87	0.62	4	NA
2	2"	2.25	5.25	10.50	8.85	18.00	5.46	4.75	0.75	4	3/4" SCH.40
	3"	3.00	6.75	13.50	9.16	30.00	5.77	6.00	0.75	4	3/4" SCH.40
3	4"	4.50	8.50	17.00	13.46	45.00	8.01	7.50	0.75	8	1.25" SCH.80
	6"*	6.00	10.75	21.50	14.96	45.00	9.51	9.50	0.87	8	1.25" SCH.80
4	8"*	8.00	12.25	24.50	18.72***	NA	12.95	11.75	0.87	8**	NA
	10"*	10.00	16.25	32.50	25.54***	NA	17.14	14.25	1.00	12	NA
	12"*	12.00	19.00	38.00	27.34***	NA	18.94	17.00	1.00	12	NA

** Gear Operator or Actuation Recommended*
*** Top (2) holes in each flange are tapped 3/4-10 UNC-2B*
**** Dimension to top of stem (No handle)*

ASME CLASS 300, FLANGED, FULL PORT

DIMENSIONS IN INCHES

FIGURE	SIZE	A	B	C	D	E	F	G	H	J	K
1	1"	1.17	3.75	7.50	5.69	6.65	3.47	3.50	0.75	4	NA
	1.5"	1.50	4.75	9.50	6.09	8.40	4.39	4.50	0.88	4	NA
2	2"	2.25	5.56	11.13	8.89	18.00	5.50	5.00	0.75	8	3/4" SCH.40
	3"	3.00	7.62	15.25	9.27	30.00	5.88	6.63	0.88	8	3/4" SCH.40
3	4"	4.50	9.00	18.00	13.52	45.00	8.07	7.88	0.88	8	1.25" SCH.80
	6"*	6.00	11.00	22.00	14.99	45.00	9.54	10.63	0.88	12	1.25" SCH.80
4	8"*	8.00	13.50	27.00	18.87***	NA	13.10	13.00	1.00	12**	NA
	10"*	10.00	16.25	32.50	25.54***	NA	17.14	15.25	1.13	16	NA
	12"*	12.00	19.00	38.00	27.34***	NA	18.94	17.75	1.25	16	NA

**Gear Operator or Actuation Recommended*
***Top 2 holes in each flange are tapped 7/8-9 UN-2B*
**** Dimension to top of stem (No handle)*

ASME CLASS 600, FLANGED, FULL PORT

DIMENSIONS IN INCHES

FIGURE	SIZE	A	B	C	D	E	F	G	H	J	K
1	1"	1.17	5.00	10.00	6.25	8.40	3.95	3.50	0.75	4	NA
	1.5"	1.50	6.25	12.50	7.10	8.40	4.79	4.50	0.88	4	NA
2	2"	2.25	6.50	13.00	9.00	18.00	5.61	5.00	0.75	8	3/4" SCH.40
	3"	3.00	8.75	17.50	9.40	30.00	6.01	6.63	0.88	8	3/4" SCH.40
3	4"*	4.50	10.00	20.00	13.64	45.00	8.19	8.50	1.00	8	1.25" SCH.80
	6"*	6.00	13.00	26.00	15.24	45.00	9.79	11.50	1.12	12	1.25" SCH.80
4	8"*	8.00	15.62	31.25	19.63***	NA	13.86	13.75	1.25	12**	NA

**Gear Operator or Actuation Recommended.*
***Top 2 holes in each flange are tapped 1-1/8-8 UN-2B*
****Dimension to top of stem (No handle)*

ASME CLASS 300 & 600, SOCKET WELD, FULL PORT

DIMENSIONS

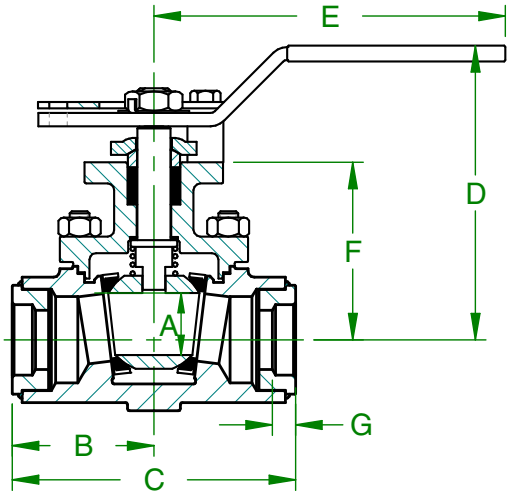

FIGURE 1

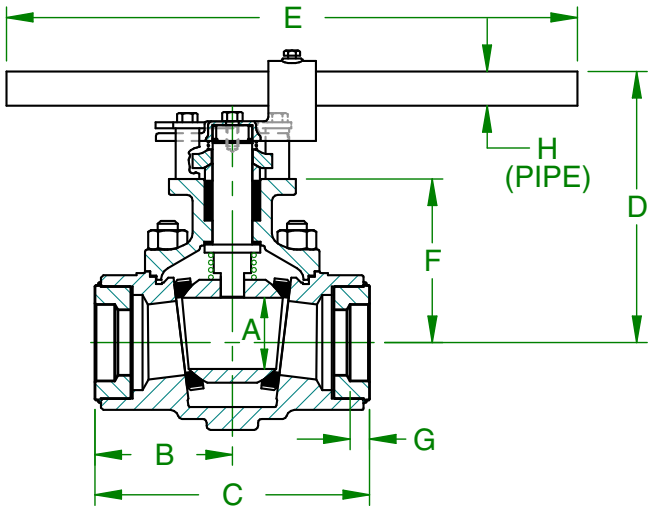

FIGURE 3

ASME CLASS 300, FULL PORT, SOCKET WELD

DIMENSIONS IN INCHES

FIGURE	SIZE	A	B	C	D	E	F	G	H
1	1"	1.17	2.68	5.36	5.57	6.65	3.36	0.38	NA
	1.5"	1.50	3.05	6.10	6.36	8.40	4.06	0.55	NA
3	2"	2.25	4.34	8.67	8.55	18.00	5.16	0.62	3/4" SCH.40

ASME CLASS 600, FULL PORT, SOCKET WELD

DIMENSIONS IN INCHES

FIGURE	SIZE	A	B	C	D	E	F	G
1	1"	1.17	2.81	5.61	5.98	8.40	3.68	0.38
	1.5"	1.50	3.18	6.36	6.57	8.40	4.27	0.55

ASME CLASS 300 & 600, NPT, FULL PORT

DIMENSIONS

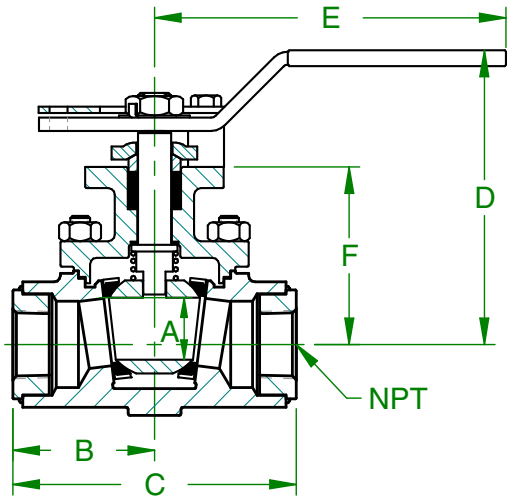

FIGURE 2

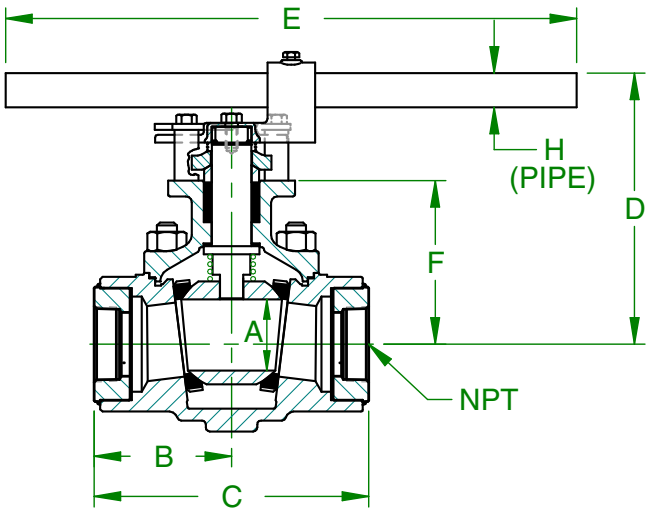

FIGURE 4

ASME CLASS 300, FULL PORT, NPT

DIMENSIONS IN INCHES

FIGURE	SIZE	A	B	C	D	E	F	G
2	1"	1.17	2.68	5.36	5.57	6.65	3.36	NA
	1.5"	1.50	3.05	6.10	6.36	8.40	4.06	NA
4	2"	2.25	4.34	8.67	8.55	18.00	5.16	3/4" SCH.40

ASME CLASS 600, FULL PORT, NPT

DIMENSIONS IN INCHES

FIGURE	SIZE	A	B	C	D	E	F
2	1"	1.17	2.81	5.61	5.98	8.40	3.68
	1.5"	1.50	3.18	6.36	6.57	8.40	4.27

ASME CLASS 300, BUTT WELD, FULL PORT

DIMENSIONS

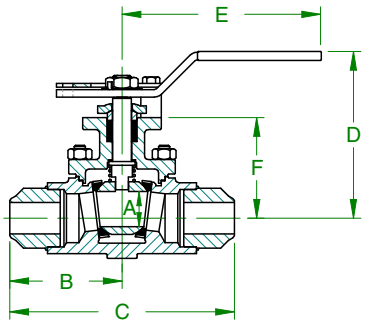

FIGURE 1

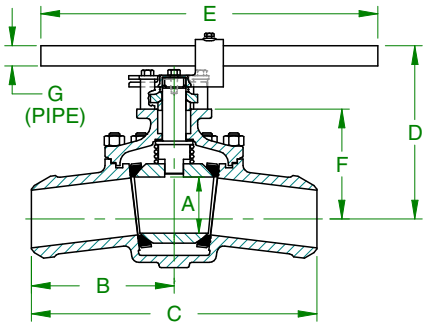

FIGURE 2

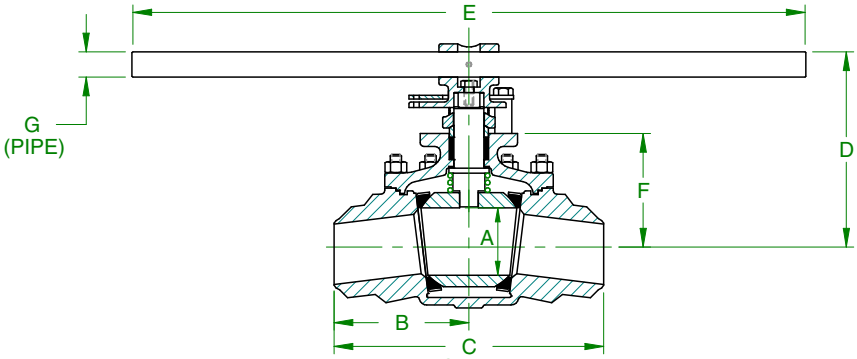

FIGURE 3

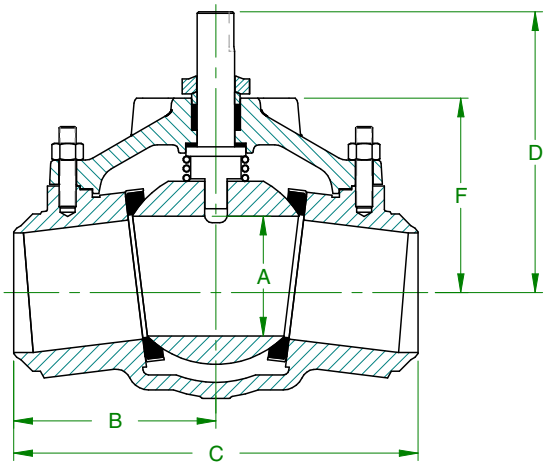

FIGURE 4

ASME CLASS 300, BUTT WELD, FULL PORT

DIMENSIONS IN INCHES

FIGURE	SIZE	A	B	C	D	E	F	G
1	1"	1.17	3.75	7.50	5.57	6.65	3.36	NA
	1.5"	1.50	4.75	9.50	6.36	8.40	4.06	NA
2	2"	2.25	5.56	11.13	8.89	18.00	5.50	3/4" SCH.40
	3"	3.00	7.63	15.25	9.27	30.00	5.87	3/4" SCH.40
3	4"	4.50	9.00	18.00	13.52	45.00	8.07	1.25" SCH.80
	6"	6.00	11.00	22.00	14.99	45.00	9.54	1.25" SCH.80
4	8"	8.00	13.50	27.00	18.88*	NA	13.11	NA

Dimension to top of stem (no handle)

ACTUATION MOUNTING PAD

DIMENSIONS

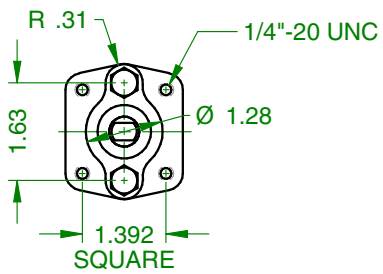

DETAIL A

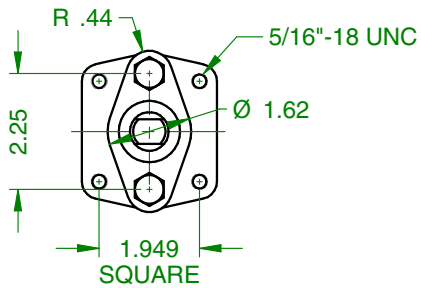

DETAIL B

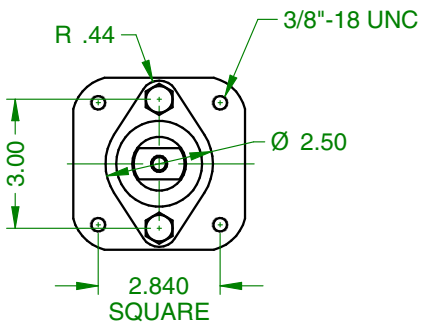

DETAIL C

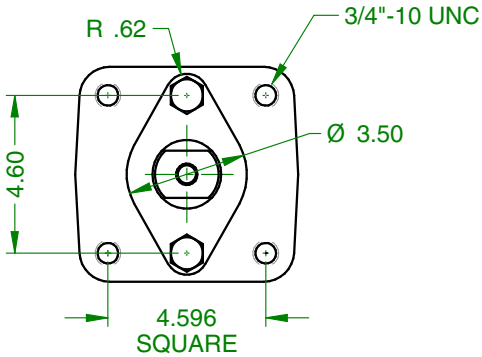

DETAIL D

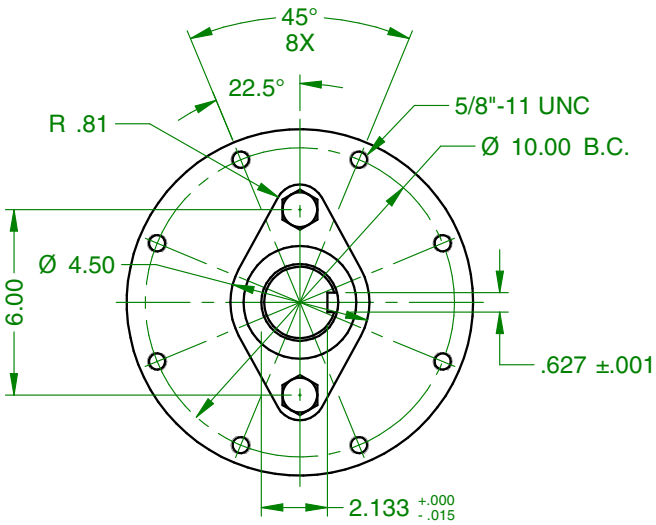

DETAIL E

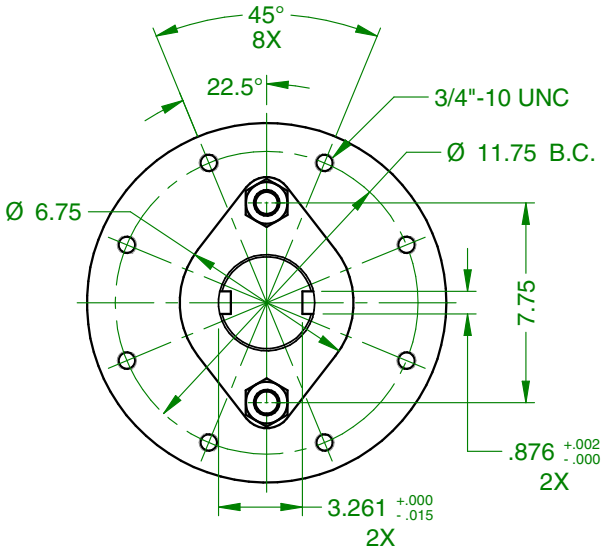

DETAIL F

ACTUATION MOUNTING

FLANGED, STANDARD PORT

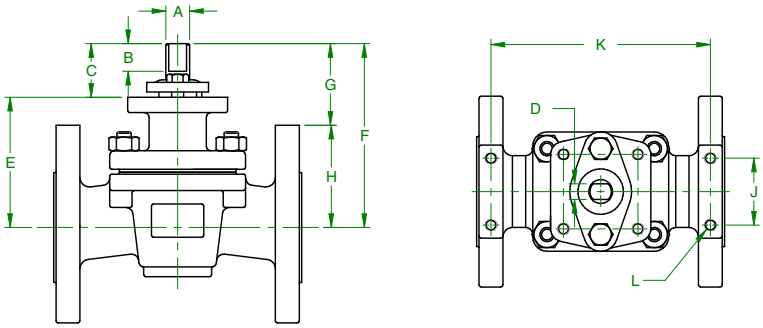

ASME CLASS 150, FLANGED, STANDARD PORT

DIMENSIONS IN INCHES

SIZE	MTG PAD	A	B	C	D	E	F	G	H	J	K	L
1/2"	DETAIL A	0.500	0.48	1.00	0.287	2.88	3.88	NA	NA	NA	NA	NA
3/4"						2.94	3.94	1.58	2.36	1.75	4.06	5/16"-18
1"						2.97	3.97	1.29	2.46	1.75	4.43	5/16"-18
1.5"	DETAIL B	0.625	0.72	1.40	0.412	3.41	4.82	2.14	2.68	1.75	5.75	5/16"18
2"		0.750	0.80	1.57	0.477	4.24	5.81	2.51	3.30	2.25	6.24	5/16"-18
3"	DETAIL C	1.250	0.50	1.70	0.725	5.16	6.85	2.97	3.88	3.50	7.18	3/8"-16
4"						5.29	6.98	2.35	4.63	4.00	8.19	7/16"-14
6"	DETAIL D	2.000	1.00	2.73	1.375	7.59	10.32	4.70	5.62	4.00	14.25	7/16"-14
8"						8.79	11.52	4.52	7.00	5.00	16.75	1/2"-13
10"	DETAIL E	2.490	2.25*	5.77	NA	11.63	17.40	8.40	9.00	7.00	19.75	3/4"-10
12"						13.69	19.46	NA	NA	NA	NA	NA

**Keyway length*

ASME CLASS 300, FLANGED, STANDARD PORT

DIMENSIONS IN INCHES

SIZE	MTG PAD	A	B	C	D	E	F	G	H	J	K	L
1/2"	DETAIL A	0.500	0.48	1.00	0.287	2.88	3.88	NA	NA	NA	NA	NA
3/4"						3.03	4.03	1.58	2.45	1.75	5.31	5/16"-18
1"						3.06	4.04	1.48	2.56	1.75	5.75	5/16"-18
1.5"	DETAIL B	0.625	0.72	1.40	0.412	3.47	4.88	1.58	3.30	1.75	6.63	5/16"-18
2"		0.750	0.80	1.57	0.477	4.33	5.90	2.25	3.65	2.25	7.56	5/16"-18
3"	DETAIL C	1.250	0.50	1.70	0.725	5.16	6.85	2.60	4.25	3.50	9.88	3/8"-16
4"						5.29	6.98	1.85	5.13	4.00	10.69	7/16"-14
6"	DETAIL D	2.000	1.00	2.73	1.375	7.59	10.32	3.94	6.38	4.00	14.31	7/16"-14
8"						8.79	11.52	3.77	7.75	5.00	18.06	1/2"-13
10"	DETAIL E	2.490	2.25*	5.77	NA	11.63	17.40	8.40	9.00	7.00	20.44	3/4"-10
12"						13.69	19.46	NA	NA	NA	NA	NA

**Keyway length*

ASME CLASS 600, FLANGED, STANDARD PORT DIMENSIONS IN INCHES

SIZE	MTG PAD	A	B	C	D	E	F	G	H	J	K	L
1/2"	DETAIL B	0.625	0.72	1.40	0.412	3.41	4.82	NA	NA	NA	NA	NA
3/4"						3.65	5.06	2.62	2.44	2.38	6.32	3/8"-16
1"						3.71	5.11	2.55	2.56	2.38	7.25	3/8"-16
1.5"		0.750	0.80	1.57	0.477	3.91	5.48	2.23	3.25	2.75	8.06	1/2"-13
2"						4.70	6.27	2.89	3.38	3.50	9.94	1/2"-13
3"	DETAIL C	1.250	0.50	1.70	0.725	5.38	7.08	2.83	4.25	4.75	12.25	1/2"-13
4"						5.69	7.38	1.88	5.50	5.50	15.00	1/2"-13
6"	DETAIL D	2.000	1.00	2.73	1.375	7.84	10.57	3.45	7.12	7.00	19.62	3/4"-10
8"						9.79	12.52	4.15	8.37	7.00	23.13	3/4"-10

**Keyway length*

aalberts integrated piping systems

ACTUATION MOUNTING

FLANGED, FULL PORT

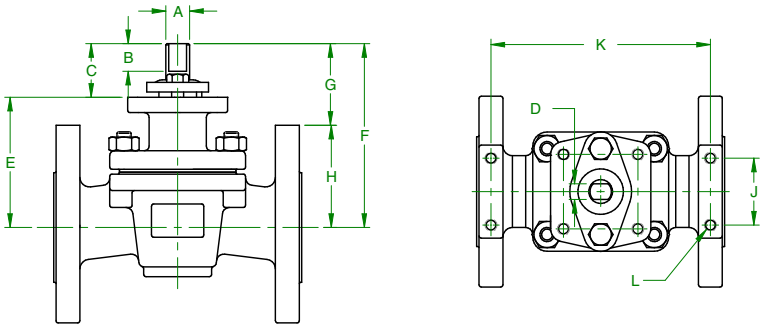

ASME CLASS 150, FLANGED, FULL PORT

DIMENSIONS IN INCHES

SIZE	MTG PAD	A	B	C	D	E	F	G	H	J	K	L
1"	DETAIL B	0.625	0.72	1.40	0.412	3.44	4.85	2.47	2.38	1.75	6.44	5/16"-18
1.5"		0.750	0.80	1.57	0.477	4.35	5.92	1.71	2.63	1.75	8.06	5/16"-18
2"	DETAIL C	1.250	0.50	1.70	0.725	5.46	7.16	4.03	3.13	2.25	9.68	5/16"-18
3"						5.77	7.46	3.58	3.88	3.50	12.48	3/8"-16
4"	DETAIL D	2.000	1.00	2.73	1.375	8.01	10.74	5.70	5.04	4.00	15.81	7/16"-14
6"						9.51	12.24	6.08	6.16	4.00	20.25	1/2"-13
8"	DETAIL E	2.490	2.25*	5.77	NA	12.95	26.38	NA	NA	NA	NA	NA
10"	DETAIL F	3.740	3.75*	8.40	NA	17.14	25.56	NA	NA	NA	NA	NA
12"						18.94	25.54	NA	NA	NA	NA	NA

**Keyway length*

ASME CLASS 300, FLANGED, FULL PORT

DIMENSIONS IN INCHES

SIZE	MTG PAD	A	B	C	D	E	F	G	H	J	K	L
1"	DETAIL B	0.625	0.72	1.40	0.412	3.47	4.88	2.50	2.38	1.75	6.69	5/16"-18
1.5"		0.750	0.80	1.57	0.477	4.39	5.96	1.20	3.19	1.75	8.63	5/16"-18
2"	DETAIL C	1.250	0.50	1.70	0.725	5.50	7.19	3.81	3.38	2.25	9.90	5/16"-18
3"						5.88	7.57	3.23	4.25	3.50	13.68	3/8"-16
4"	DETAIL D	2.000	1.00	2.73	1.375	8.07	10.80	5.67	5.13	4.00	16.50	7/16"-14
6"						9.54	12.27	5.36	6.91	4.00	20.38	1/2"-13
8"	DETAIL E	2.490	2.25*	5.77	NA	13.10	26.38	NA	NA	NA	NA	NA
10"	DETAIL F	3.740	3.75*	8.40	NA	17.14	25.56	NA	NA	NA	NA	NA
12"						18.94	25.54	NA	NA	NA	NA	NA

**Keyway length*

ASME CLASS 600, FLANGED, FULL PORT

DIMENSIONS IN INCHES

SIZE	MTG PAD	A	B	C	D	E	F	G	H	J	K	L
1"	DETAIL B	0.750	0.80	1.57	0.477	3.95	5.52	2.96	2.56	2.38	8.75	3/8"-16
1.5"						4.79	6.36	3.11	3.25	2.75	11.06	1/2"-13
2"	DETAIL C	1.250	0.50	1.70	0.725	5.61	7.31	3.85	3.46	3.50	11.38	1/2"-13
3"						6.01	7.71	3.46	4.25	4.75	15.56	1/2"-13
4"	DETAIL D	2.000	1.00	2.73	1.375	8.19	10.92	5.42	5.50	5.50	17.75	1/2"-13
6"						9.79	12.52	5.40	7.12	7.00	23.44	3/4"-10
8"	DETAIL E	2.490	2.25*	5.77	NA	13.86	19.63	NA	NA	NA	NA	NA

**Keyway length*

ACTUATION MOUNTING

SOCKET WELD & NPT

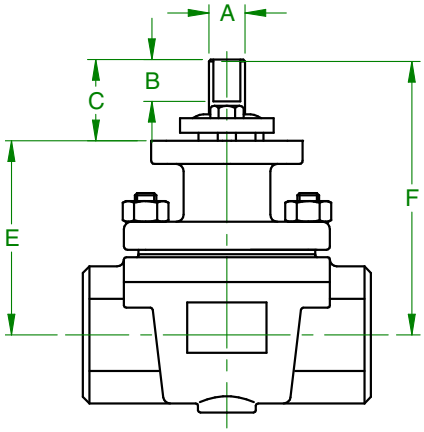

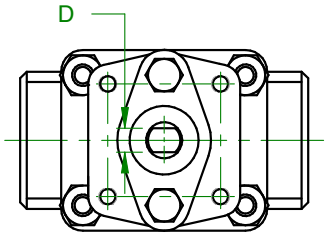

ASME CLASS 300, SOCKET WELD & NPT, STANDARD PORT

DIMENSIONS IN INCHES

SIZE	MTG PAD	A	B	C	D	E	F
1/2"	DETAIL A	0.500	0.48	1.00	0.287	2.88	3.88
3/4"						2.88	3.88
1"						3.12	4.12
1.5"	DETAIL B	0.625	0.72	1.40	0.412	3.40	4.80
2"		0.750	0.80	1.57	0.477	4.34	5.91
3"	DETAIL C	1.250	0.50	1.70	0.725	5.16	6.86

ASME CLASS 300, SOCKET WELD & NPT, FULL PORT

DIMENSIONS IN INCHES

SIZE	MTG PAD	A	B	C	D	E	F
1"	DETAIL B	0.625	0.72	1.40	0.412	3.40	4.80
1.5"		0.750	0.80	1.57	0.477	4.34	5.91
2"	DETAIL C	1.250	0.50	1.70	0.725	5.16	6.86

ASME CLASS 600, SOCKET WELD & NPT, STANDARD PORT

DIMENSIONS IN INCHES

SIZE	MTG PAD	A	B	C	D	E	F
1/2"	DETAIL B	0.625	0.72	1.40	0.412	3.41	4.82
3/4"							4.82
1"							4.82
1.5"		0.750	0.80	1.57	0.477	3.68	5.25
2"						4.27	5.84

ASME CLASS 600, SOCKET WELD & NPT, FULL PORT

DIMENSIONS IN INCHES

SIZE	MTG PAD	A	B	C	D	E	F
1"	DETAIL B	0.750	0.80	1.57	0.477	3.68	5.25
1.5"						4.27	5.84

ACTUATION MOUNTING

BUTT WELD

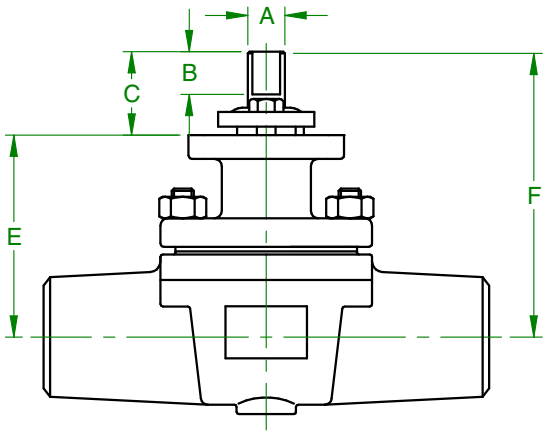

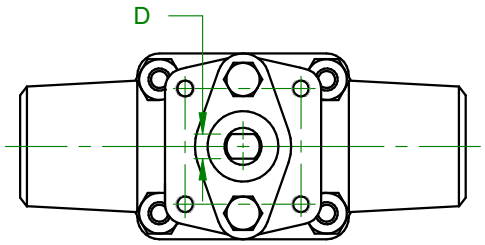

ASME CLASS 300, BUTT WELD, STANDARD PORT

DIMENSIONS IN INCHES

SIZE	MTG PAD	A	B	C	D	E	F
1/2"	DETAIL A	0.500	0.48	1.00	0.287	2.88	3.88
3/4"						3.03	3.88
1"						3.06	4.12
1.5"	DETAIL B	0.625	0.72	1.40	0.412	3.40	4.80
2"		0.750	0.80	1.57	0.477	4.34	5.91
3"	DETAIL C	1.250	0.50	1.70	0.725	5.16	6.86
4"						5.29	6.99
6"	DETAIL D	2.000	1.00	2.73	1.375	7.59	10.32
8"						9.00	11.71

ASME CLASS 300, BUTT WELD, FULL PORT

DIMENSIONS IN INCHES

SIZE	MTG PAD	A	B	C	D	E	F
1"	DETAIL B	0.625	0.72	1.40	0.412	3.36	4.76
1.5"		0.750	0.80	1.57	0.477	4..06	5.63
2"	CONTACT FACTORY						
3"	DETAIL C	1.250	0.50	1.70	0.725	5.87	7.57
4"	DETAIL D	2.000	1.00	2.73	1.375	8.07	10.80
6"						9.54	12.27
8"	DETAIL E	2.490	2.25*	5.77	NA	13.11	18.88

**Keyway length*

ACTUATION MOUNTING

CLASS 600, BUTT WELD, STANDARD PORT

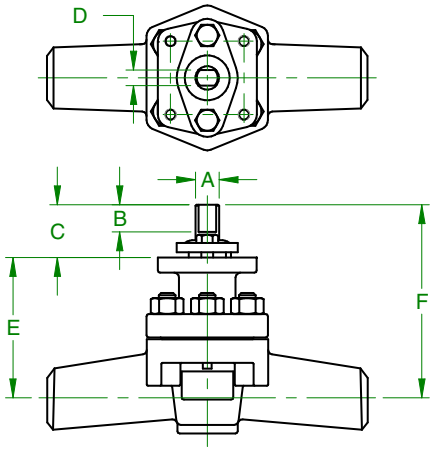

CLASS 600 BUTTWELD STANDARD PORT - SIZES 1/2"THRU 2"

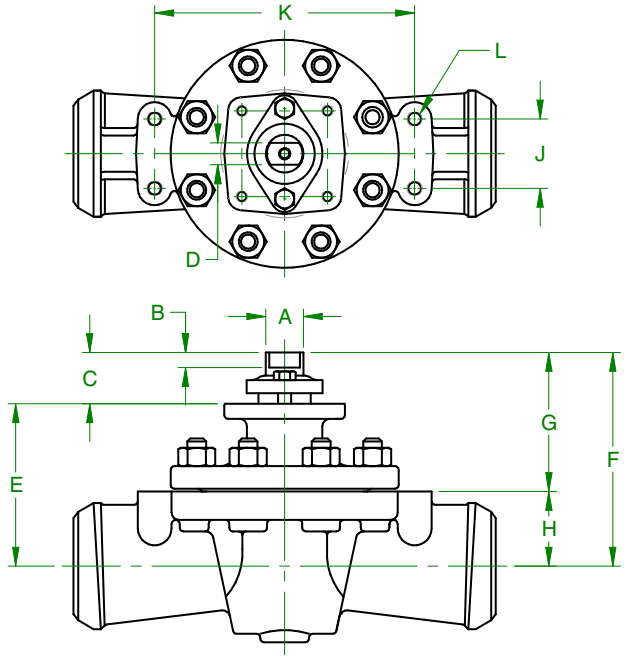

CLASS 600 BUTTWELD STANDARD PORT - SIZES 3"THRU 6"

ASME CLASS 600, BUTT WELD, STANDARD PORT

DIMENSIONS IN INCHES

SIZE	MTG PAD	A	B	C	D	E	F	G	H	J	K	L
1/2"	DETAIL B	0.625	0.72	1.40	0.412	3.41	4.82	NA				
3/4"						3.66	5.06					
1"						3.72	5.11					
1.5"		0.750	0.80	1.57	0.477	3.92	5.48					
2"						4.73	6.27					
3"	DETAIL C	1.250	0.50	1.70	0.725	5.38	7.08	4.61	2.47	2.42	8.62	1/2"-13
4"						5.69	7.38	4.36	3.02	2.80	11.00	1/2"-13
6"	DETAIL D	2.000	1.00	2.73	1.375	7.84	10.57	6.38	4.19	4.25	15.00	3/4"-10

aalberts integrated piping systems

TOP ENTRY VALVES

STANDARD BONNETS

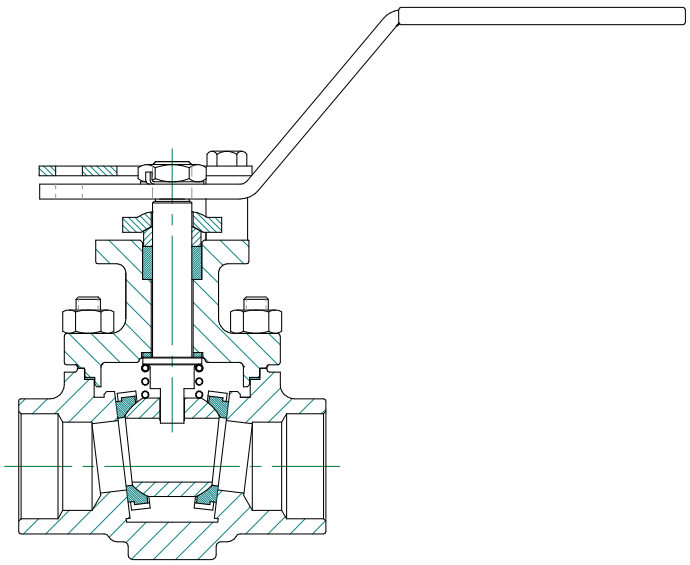

STANDARD BONNET
ISO 5211 Mounting Pad

The valve's seat material "code" in the Product Numbering System determines the default stem seal material (default is either PTFE V-Rings or flexible graphite rings).

Note: To meet a wide range of application requirements, a variety of materials are offered. See options in the "How to Specify" section.

PTFE V-RING STEM SEALS

- Extremely low coefficient of friction
- Molded V-shaped rings are "spring-loaded" and self adjusting.
- Provides very good stem seal performance

ENHANCEMENT – LIVE LOADED PACKING (ADD SUFFIX TO PRODUCT NUMBER)

- "-76" Suffix – Live loaded valve with handle or lever.
- "-77" Suffix - Live loaded valve with actuator or manual gear.

Live-loaded, V-ring packing assures long maintenance-free operation by maintaining a constant packing force without over-compression. Corrosion-resistant stainless steel conical washers store compressing energy; consequently, the valve can be cycled more without stem seal adjustments

FLEXIBLE GRAPHITE RING STEM SEALS

ENHANCEMENT – LOW EMISSIONS

- "EF" Suffix - Graphite Low Emissions System. The stem packing is high-density, self-lubricating, non-hardening, and dimensionally stable.

ENHANCEMENT – LIVE LOADED PACKING

- "-76" Suffix – Live loaded valve with handle or lever.
- "-77" Suffix – Live loaded valve with actuator or manual gear.

TOP ENTRY VALVES

EXTENDED BONNETS

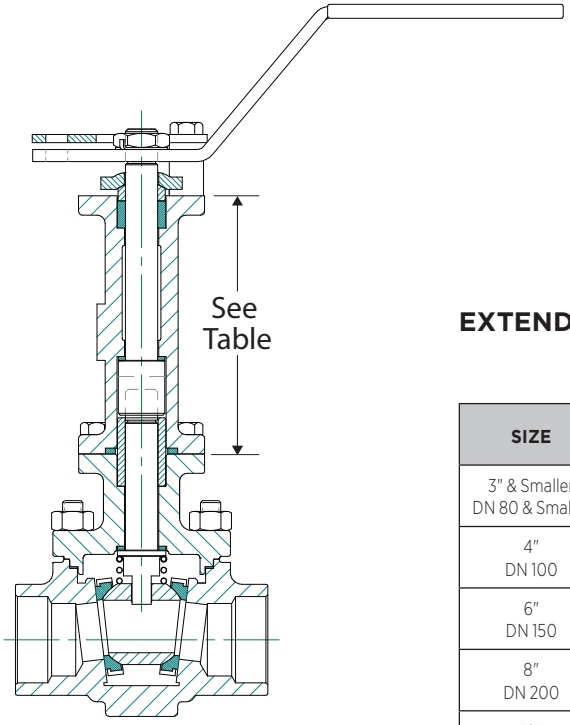

EXTENDED BONNET (Add "-70" Suffix)

EXTENDED BONNET HEIGHT

	ASME CLASS 150 ASME CLASS 300		ASME CLASS 600	
SIZE	STANDARD PORT IN. (MM)	FULL PORT IN. (MM)	STANDARD PORT IN. (MM)	FULL PORT IN. (MM)
3" & Smaller DN 80 & Smaller	4" (102)	4" (102)	4" (102)	4" (102)
4" DN 100	4" (102)	6.5" (165)	4" (102)	6.5" (165)
6" DN 150	6.5" (165)	6.5" (165)	6.5" (165)	6.5" (165)
8" DN 200	6.5" (165)	10" (254)	6.5" (165)	10" (254)
10" DN 250	10" (254)	12.5" (318)		
12" DN 300	10" (254)	12.5" (318)		

ADVANTAGES:

- Extended bonnets provide excellent performance in higher temperature or semi cryogenic applications. The extended bonnet design moves the stem seals further away from the process flow's temperature, and the stem seals' temperature is closer to ambient temperature.
- Extended bonnets move the packing adjustment at least 4"; therefore, installed insulation typically will not need to be disturbed to adjust the stem packing. If and when stem leakage occurs, it can be immediately observed and corrective action taken without insulation removal.
- A valuable feature of the Extended Bonnet is that it is field retrofitable. In addition to being able to order valves with several bonnet styles direct from the factory, pre-assembled kits are available with the stem, bonnet, packing, gland, plate and nuts assembled together and properly torqued for dependable performance. Contact your local Apollo Representative for kit part numbers for any specific valve or application.

TOP ENTRY VALVES

DOUBLE PACKED BONNETS

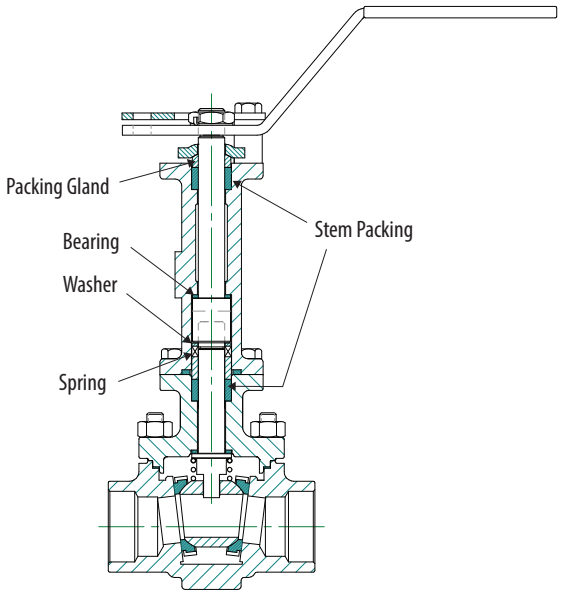

DOUBLE PACKED BONNET (Add "-90" Suffix)

Apollo recommends also specifying live-loading with the "-90" option.

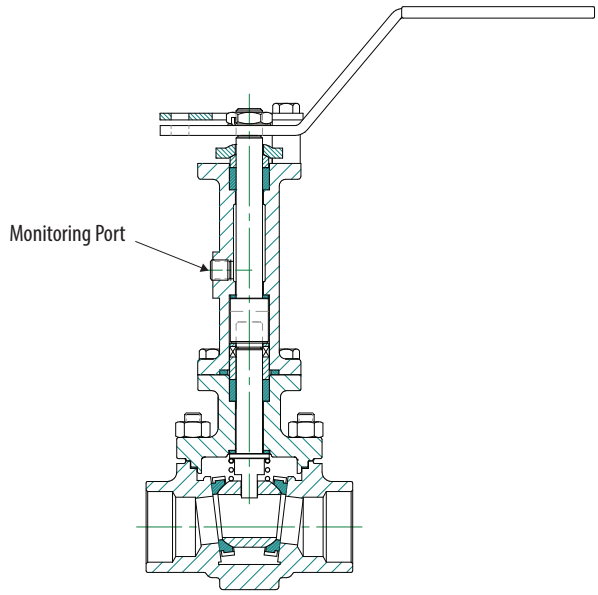

DOUBLE PACKED BONNET WITH PORT (Add "-9P" Suffix)

Apollo recommends also specifying live-loading with the "-9P" option.

The standard Apollo Top Entry Valve bonnet with PTFE V-Rings or Graphite V-Rings ("-EP") provide exceptional fugitive emission performance. See Standard Bonnet Configuration.

In conditions where double packed shaft sealing systems are required, Apollo also offers the "-90" and "-9P" sealing systems.

APOLLO'S DOUBLE PACKED BONNETS ("-90" AND "-9P"):

- Designed and tested to keep fugitive emissions below 100 parts per million volume (ppmv) in your application for tens of thousands of cycles.
- Installs easily on existing valves or can be purchased with new valves.
- Helps seal your process to conserve valuable process fluid while protecting the environment against the emission of hazardous or polluting fluids.
- Longer life and improved reliability of Apollo Double Packed Bonnet systems reduce maintenance cost and downtime.

TOP ENTRY VALVES

STEAM JACKETS

Apollo Top Entry Ball Valves are ideally suited for jacketed applications. The top entry concept allows for continued access to stem packings and valve internals for ease of maintenance without disturbing the jacket itself or removing the valve from the pipeline.

Partial jacketing may be used on standard valves. Partial jacketing is applied just to the center section of the valve and does not incorporate the neck area or flanges of the valve. It is generally specified to allow the use of standard flanges and retain conventional flange bolting.

Welded full jacketing may be applied to valves with oversize flanges or standard flanges. (Fully jacketed, standard flange valves have modified flanges with blind tapped stud holes in place of the ordinary through holes.) Valves and jacketing can be supplied in a variety of materials. Common materials are stainless valves with stainless jackets, but exotic combinations such as Alloy 20 valves with carbon steel flanges and carbon steel jacketing have been supplied to meet the performance and cost requirements for specific applications.

Clamp-on jacketing offers flexibility not available in the other configurations. Clamp-on jacketing can be applied to valves already in service, or can be removed and reinstalled on a replacement valve or another similar valve in another application. Clamp-on jackets can be supplied as a weldment or in cast aluminum. A heat transfer compound can be applied between the clamp-on jacket and valve to improve its efficiency.

Combining these jacketed valves with extended bonnets for safe convenient operation, and adding carbon graphite seats or ceramic balls and seats enables the valve to handle a broad range of viscous materials and temperatures.

FULL WELDED JACKET

FULL WELDED JACKET WITH OVERSIZE FLANGES

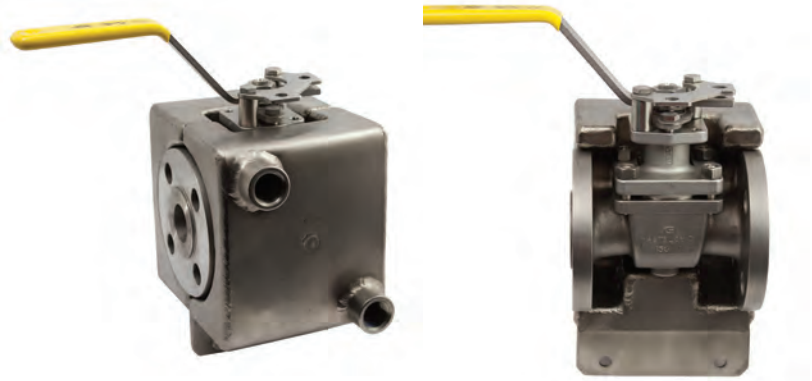

CLAMP-ON JACKET

TOP ENTRY VALVES

SPECIAL APPLICATIONS

"FIRE-SAFE" REQUIREMENTS

Seat and seal arrangements are available to address valves in applications where performance during and immediately after a fire are a concern. "L" (Multiseal) seat configuration offers "tested" fire-safe performance. Graphite spiral wound gaskets are available for bonnet seals. Die-formed Grafoil® in various configurations provide the stem seals.

ABRASIVE & EROSIVE SERVICES

"Soft Seated" valves for abrasive services feature seat inserts completely confined by metallic components. Some designs feature inner and outer seat support rings, where the inner ring helps shield the seat insert from abrasives in the service. Other designs feature one piece seat holders which completely confine the seat insert and provide the same function in protecting the soft seat from abrasive particles in the flow stream.

In addition to the seat configuration options, resilient and rigid seat materials are available. The rigid seat choices include carbon-graphite, ceramic, peek, and carbon reinforced peek. The seats and the ball are both produced from ceramic in the one case. Any of these seats provide improved resistance to abrasion and erosion and additionally extend the potential service range to 1000°F (538°C).

For steam services, the #5 seat, a RPTFE containing 55% bronze and 5% molybdenum disulfide, is an excellent choice as is the #4 carbon-graphite seat.

CHLORINE SERVICE

Valves intended for service in dry chlorine require specific alloy selections, design features, cleaning and testing procedures. In accordance with the guidelines established by "The Chlorine Institute", Pamphlet 6, Hastelloy trimmed carbon steel valves (model numbers starting with "CH") are suggested, and M35-1 trimmed carbon steel valves (model numbers beginning "CM") are the alternative for dry chlorine. All Hastelloy or M35-1 valves are also available.
NOTE: Stainless steel valves or components are not recommended.

Selecting the required "-26" feature insures a valve that has been vented, cleaned, and tested to comply with the requirements of The Chlorine Institute Pamphlet 6.

OXYGEN SERVICE

For this application, cleanliness is of utmost importance. Apollo Top Entry Valves specified for oxygen service (option "-57") are subjected to rigorous preparation procedures including special pre-cleaning and inspection followed by ultrasonic cleaning and more intense inspection. All to insure that the finished valve is free of burrs and sharp edges as well as cleaned of hydrocarbon residues and particulate matter. Once valves destined for oxygen service enter Conbraco's clean room for preparation, they do not leave until they have been cleaned, assembled, thoroughly tested, inspected, tagged and bagged to meet customer requirements.

All Apollo Top Entry Valves have "anti-static" features designed in. Valves for oxygen service must also be fitted with PTFE and packing. When planning to insulate valves, consider specifying one of our extended bonnet options.

HIGH TEMPERATURE SERVICE

For any applications utilizing graphite, carbon graphite, peek, carbon reinforced peek, or ceramic seats, a ball stop should be incorporated into the valve design (option "RS"). This option is suggested at any temperature but it becomes a necessity above 500°F (260°C) or when using ceramic seats. The ball stop prevents the ball and seat from sliding down the 7° wedge when expansion caused by the temperature increase widens the wedge. If the ball was permitted to slide down the wedge, the valve would be locked tight when cooling caused the wedge to contract.

TOP ENTRY VALVES

FLOW COEFFICIENTS

The table below presents the Flow Coefficients (Cv) for Apollo Top Entry Ball Valves. This number represents the flow (in gallons per minute of water) required to produce a 1 psig pressure drop across the valve. The data shown is for a valve in the full open position. The values shown represent the average for several tests which highlighted the variability of Flow Coefficients. It is not unreasonable to expect a 10% to 20% deviation for a specific valve from the nominal figures shown.

Knowing specific system characteristics; such as line size, flow rate, temperature and pressure and knowing specific fluid characteristics; such as specific gravity, density, or compressibility factor allows the verification of the pressure drop across a known valve. Or conversely, in the absence of a valve size and knowing an acceptable pressure drop under the described flow conditions, it is possible to select an appropriately sized valve.

FLOW OF LIQUID

$$Q = C_V \sqrt{\frac{\Delta P}{SpGr}}$$

$$\text{or } \Delta P = \frac{(Q)^2\,(SpGr)}{(C_v)^2}$$

WHERE:

- Q = Flow in US gpm
- ΔP = Pressure drop (psig)
- SpGr = Specific gravity at flowing temperature
- C_v = Valve constant

FLOW OF GAS

$$Q = 1360\ C_V \sqrt{\frac{(\Delta P)\,(P_2)}{(SpGr)\,(T)}}$$

$$\text{or } \Delta P = \frac{5.4 \times 10^{-7}\,(SpGr)\,(T)\,(Q)^2}{(Cv)^2\,(P_2)}$$

WHERE:

- Q = Flow in SCFH
- ΔP = Pressure drop (psig)
- SpGr = Specific gravity (based on air = 1.0)
- P2 = Outlet pressure–psia (psig + 14.7)
- T = (temp. °F + 460)
- C_v = Valve constant

CAUTION: The gas equation shown, is valid at very low pressure drop ratios. The gas equation is NOT valid when the ratio of pressure drop (ΔP) to inlet pressure (P1) exceeds 0.02.

NOTE: Only use the gas equation shown if (P1-P2)/P1 is less than 0.02.

FLOW COEFFICIENTS

FULL PORT

VALVE SIZE	150 CLASS FLANGED	300 CLASS FLANGED	600 CLASS FLANGED
1″	95	90	85
1-1/2″	230	225	200
2″	435	420	400
3″	1050	1000	950
4″	1950	1900	1800
6″	4800	4300	4300
8″	9100	8700	8000

FLOW COEFFICIENTS

STANDARD PORT

VALVE SIZE	150 CLASS FLANGED	300 CLASS FLANGED	300 CLASS BUTTWELD	300 CLASS SOCKET WELD	300 CLASS NPT	600 CLASS FLANGED	600 CLASS BUTTWELD	600 CLASS SOCKET WELD	600 CLASS NPT
1/2″				20	20			20	20
3/4″	50	50	50	30	30	50	50	30	30
1″	60	60	60	40	40	60	60	40	40
1-1/2″	100	100	100	70	70	100	100	70	70
2″	180	180	180	120	120	190	190	120	120
3″	330	400	400	260	260	410	410	260	260
4″	600	720	720				780	780	
6″	1,500	1,500	1,500				1,700	1,700	
8″	2,500	2,500					3,100		
10″	3,800	3,800					4,900		

TOP ENTRY VALVES

OPERATING TORQUE

There are several elements involved in developing an appropriate "in-service" valve operating torque. Selection of the basic valve torque constant, shown on this page establishes the nominal valve torque based on the valve size, specified valve seat and the approximate working pressure.

Armed with the nominal valve operating torque, adjustments are now made to account for individual service conditions. These factors are selected from the table at the lower right. They are additive, or combined in series and used to arrive at the "in-service" torque.

TORQUE CONSTANTS FOR TOP ENTRY BALL VALVES

SEATS	VALVE SIZE STD. PORT (INCHES)	VALVE SIZE FULL PORT (INCHES)	DIFFERENTIAL PRESSURES (PSIG) (IN.-LB.)						
			100	285	500	740	1480	LSST*	GRAFOIL® ADDER
5 6** C D G J L M U**	1/2 thru 1	1/2 thru 3/4	85	110	140	180	290	170	68
	1-1/2	1	205	260	330	415	660	410	96
	2	1-1/2	350	430	550	735	1,200	700	127
	3	2	950	1,250	1,650	2,000	3,200	1,900	245
	4	3	2,000	2,500	3,300	4,100	6,500	4,000	399
	6††	4††	5,300	6,700	8,200	11,400	18,000	10,600	661
	8††	6††	11,000	14,000	18,500	25,000	36,000	22,000	900
	10††	8††	18,500	22,000	30,000	40,000	62,000	37,000	1,326
4 8 9 B H N	1/2 thru 1	1/2 thru 3/4	115	160	210	260	450	230	68
	1-1/2	1	270	370	480	590	1,000	540	96
	2	1-1/2	475	650	860	1,050	1,750	950	127
	3	2	1,250	1,850	2,400	2,950	4,900	2,500	245
	4††	3††	2,700	3,700	4,900	5,900	10,000	5,400	399
	6††	4††	7,410	10,100	13,400	16,400	25,300	14,800	661
	8††	6††	15,000	20,000	26,000	34,500	56,000	30,000	900
	10††	8††	25,000	32,000	45,000	60,000	96,000	50,000	1,326

**LSST - Long Stand Still Torque*
***Rated torque for #6 and U seat add 30%*
†Rated torque for #9 ceramic seat is to be increased by 10%
††Gear operator or actuation recommended

EXAMPLE

Selected Valve:
3" 150 w/"M" seat
(Model: CS-BM0-01)

Torque Constant:
1250 in-lb

Service Factors:

ON/OFF Service	0.0
Clean Dry Air	0.3
Weekly Operation	0.2
Net Service Factor	0.5

"In Service" Valve Torque:
1250 x (1 + 0.5) = 1875 in-lb
(This is the valve torque used to select an actuator.)

BALL VALVE TORQUE ADJUSTMENT FACTORS

PROVISION	CONDITION	FACTOR
Type of Operation	On/Off Service	0
	Modulating Service	0.25
Process Media	Liquid, Clean Particle Free	0
	Liquid, Dirty, Slurry, Raw Water	0.3 to 0.8
	Liquid, Black Liquor, Lime Slurry	0.8
	Liquid, Oil, Lubricating	0
	Liquid, Viscous, Molasses	0.3
	Gas, Clean & Wet	0
	Gas, Dry	0.3 to 0.5
	Gas, Dirty, Air Slurry, Natural Gas	0.5 to 1
	Oxygen, Chlorine	0.5
	Superheated Steam, Saturated Steam	Refer to Process Temp.
Frequency of Operation**	Once Per Day or More	0
	Once Per Week	0.2
	Once Per Month	0.5
	Less Than Once Per Month (LSST)	1
Process Temperature	Applications Above 225 Deg F (107°C)	0.50
	Applications Below -20 Deg F (-29°C)	0.25
Option "-49" Option "-57" Option "-67" Option "-90"	Assembled Dry	0.3
	Oxygen Cleaned	0.3
	Cleaned for Industrial Gas	0.3
	Double Packed Extended Bonnet	0.2
Customer Specified	Prescribed Safety Factor	0.2 to 2

*** If accounting for LSST disregard frequency of operation.*

TOP ENTRY VALVES

HOW TO SPECIFY

PLEASE USE ALL DIGITS WHEN ORDERING

C — BODY MATERIAL

CARBON STEEL CASTING
C - ASTM A216 GRADE WCB

L - A352 LCC
LOW-TEMP SERVICE

P - A217 C12
CHROMIUM-MOLYBDENUM
HIGH-TEMP SERVICE

STAINLESS STEEL CASTING
S - ASTM A351 GRADE CF8M (316 SS)
A - A351 CN7M (ALLOY 20)
B - A351 CF3M* (316L)
G - A351 CG8M (317 SS)
J - A995 CD3MN (2205 DUPLEX)
K - A995 CD3MWCUN (2507 SUPER DUPLEX)
R - A351 CN3MN (AL6XN® SUPER AUSTENITIC)
W - A351 CK3MCUN (254 SMO)

NICKEL BASED ALLOY CASTING
F - ASTM A494 GRADE CW6MC (INCONEL™ 625)
H - A494 CW12MW (HASTELLOY® C)
M - A494 M35-1 (MONEL®)
N - A494 CZ100
COMMERCIALLY PURE NICKEL
Y - A494 N12MV (HASTELLOY® B-2)

** Flanged Valves Only - CF3M*
( ) Represents Close Wrought Equivalent

S — TRIM MATERIAL

STAINLESS STEEL
S - 316 SS

A - ALLOY 20
B - 316L SS
E - 410 SS
J - 220S DUPLEX SS
K - 2507 SUPER DUPLEX SS
R - AL6XN
W - 254 SMO

NICKEL BASED
F - INCONEL
H - HASTELLOY C
M - M35-1 (MONEL)
D - HASTELLOY C STEM, M35-1 BALL
N - NICKEL
Y - HASTELLOY

J — CLASS, PORT, ENDS

CLASS 150
STANDARD PORT
B - FLANGED

FULL PORT
E - FLANGED

CLASS 300
STANDARD PORT
C - FLANGED
D - NPT
G - NPT X SOCKET WELD
N - SOCKET WELD
P - BUTTWELD
R - FLG X BUTTWELD
S - RTJ FLANGES

FULL PORT
3 - BUTTWELD
F - FLANGED
L - NPT
M - SOCKET WELD
Y - NPT X SOCKET WELD

CLASS 600
STANDARD PORT
H - NPT
J - SOCKET WELD
K - FLANGED
Q - NPT X SOCKET WELD
W - BUTTWELD

FULL PORT
4 - NPT
6 - NPT X SOCKET WELD
7 - BUTTWELD
T - SOCKET WELD
U - FLANGED

L — SEAT

MULTI-SEAL
L - MULTI-SEAL TFM, API-607 CERTIFIED (FIG 3)
M - MULTI-SEAL (FIG 1)

UHMWPE
6 - UHMWPE (FIG 2)
U - UHMWPE (FIG 1)

GRAPHITE ("HARD" SEAT TIGHTNESS)
4 - CARBON GRAPHITE, 750°F MAX. (FIG 1)
H - HIGH TEMP GRAPHITE, 1000°F MAX. (FIG 1)

PEEK ("HARD" SEAT TIGHTNESS)
8 - PEEK (FIG 2)
B - PEEK, 30% CARBON REINFORCED (FIG 2)

CERAMIC ("HARD" SEAT TIGHTNESS)
9 - CERAMIC (FIG 4)

NYLON
N - NYLON

ADDITIONAL SEATS
5 - 55% BRONZE, 5% MOLY (FIG 2)
C - PFA (FIG 2)
D - SRPTFE, 60% SS, 40% TFE BY WEIGHT, 50% SS MIN (FIG 2)
G - PCTFE (FIG 2)
J - PFA, API-607 CERTIFIED (FIG 3)

NOTE
FIGURE NUMBERS INDICATE SEAT DESIGN. SEE "SEAT DATA" SECTION IN BVBI SECTION N

SEAT CODE ALSO DICTATES DEFAULT SEAL MATERIAL AND DEFAULT SUFFIX. SEE "MATERIALS" SECTION IN BVBI SECTION N

PRESSURE-TEMPERATURE RATINGS ARE FOUND IN THE "PRESSURE-TEMPERATURE RATINGS" SECTION IN BVBI SECTION N

TOP ENTRY VALVES

HOW TO SPECIFY

NOTE: NOT ALL OPTIONS LISTED ARE COMPATIBLE OR AVAILABLE. CONSULT FACTORY FOR AVAILABILITY OF UNLISTED OPTIONS.

	8	24	
	SIZE (IN.)	OPTIONS	MODEL REVISION (FACTORY ASSIGNED)
	3 - 1/2" 4 - 3/4" 5 - 1" 7 - 1.5" 8 - 2" 0 - 3" A - 4" C - 6" E - 8" G - 10" H - 12"	-01 DEFAULT SUFFIX FOR "M" AND "G" SEATS -24- DEFAULT SUFFIX FOR 4, 5, 6, 8, 9, B, C, D, H, J, L, N, U SEATS **OPTIONAL FEATURES MAY BE USED ALONE OR IN COMBINATION** **(SIMPLY ADD THE SUFFIXES TO THE PRODUCT NUMBER IN THE ORDER LISTED BELOW)** **NOTE: THE "-01" SUFFIX IS NOT USED IF THERE ARE ADDITIONAL SUFFIXES** **NOTE: NOT ALL COMBINATIONS ARE AVAILABLE ON ALL VALVES** -04- 2-1/4" STEM EXTENSION -10- STAINLESS PIPE HANDLE (3" & LARGER CARBON STEEL ONLY) -14- VENTED BODY DESIGN -15- WHEEL HANDLE, STAINLESS STEEL -24- GRAPHITE PACKING & SPIRAL WOUND GRAPHITE GASKET--NOT ALWAYS FIRE SAFE -26- VENTED & CLEANED FOR CHLORINE SERVICE (CS, HC, & MO ONLY) -45- NO LEVER OR NUT -- BARE STEM -49- ASSEMBLED DRY -- NO LUBRICATION -57- OXYGEN CLEANED -67- CLEANED FOR INDUSTRIAL GASES -70- EXTENDED BONNET -73- TFE PACKING, SPIRAL WOUND SEALS - TFE FILLERS -76- LIVE-LOADED - VALVE WITH LEVER -77- LIVE-LOADED - VALVE WITH GEAR OR ACTUATOR -82- FLAT FACED FLANGES -90- DOUBLE PACKED EXTENDED BONNET -9P- DOUBLE PACKED EXTENDED BONNET WITH PORT -BC- ASTM A193 GRADE B7 BOLTS -BT- TEFLON COATED ASTM A193 GRADE B7 FASTENERS -CB- CERAMIC BALL ONLY -CS- CERAMIC SEAT ONLY -DF- DELTA FERRITE REPORT (SS ONLY) -DP- DYE PENETRANT -EF- FUGITIVE EMISSIONS PACKING (GRAPHITE) -EP- V-RING GRAPHITE PACKING -KB- KOLSTERISED BALL -MG- MANUAL GEAR OPERATOR -MH- MANUAL GEAR OPERATOR WITH LOCKOUT -MJ- MANUAL GEAR OPERATOR WITH OVERSIZE HANDWHEEL -MK- MANUAL GEAR OPERATOR WITH OVERSIZE HANDWHEEL & LOCKOUT -MP- POSITIVE MATERIAL IDENTIFICATION -NC- NACE CERTIFIED (RC 22 MAX) -PG- NO PLASTISOL GRIP ON LEVER (USED IN TOBACCO PLANTS) -RS- BLOW-OUT PROOF WELDED BALL STOP WITH SAFETY CAP -SR- SPRING RETURN -TC- HYDROSTATIC TEST WITH CERTIFIED REPORT -TD- TEST TO API 6D WITH CERTIFICATION -TM- MATERIAL TRACEABILITY -TR- HYDROSTATIC TEST WITH CERTIFICATION & MTR -TW- HYDROSTATIC TEST WITH WITNESS & CERTIFICATION -ZP1- FUGITIVE EMISSIONS PACKING (VITON) -ZP2- FUGITIVE EMISSIONS PACKING (BUNA-N) -ZP3- FUGITIVE EMISSIONS PACKING (KALREZ) **BUTT WELD** BUTT WELD VALVES INCLUDE A SUFFIX THAT SPECIFIES THE END PREPARATION E.G. SCHEDULE W1(SCH10), W4(SCH40), W8(SCH80), ETC... *NOTE: This is a very limited list of the available options.* *Contact the factory for specific requirements and availability.*	EXAMPLE: CSJL424A Carbon Steel Body 316 SS Trim Class 600 Standard Port Socket Weld Ends API-607, Multiseal Seat 3/4" Spiral Wound Flexible Graphite Gasket Flexible Graphite Packing Model Revision = A

SEAL REPAIR KITS FOR ISO 5211 BONNET

HOW TO SPECIFY

PLEASE USE ALL DIGITS WHEN ORDERING

S	S	0	M	5	01	A
TOP ENTRY REPAIR KIT	TRIM MATERIAL	VALVE CLASS	SEAT	SIZE	ADDITIONAL FEATURES	MODEL REVISION
USE "S" FOR FIRST CHARACTER	INSERT TRIM CODES FROM TOP ENTRY VALVE "HOW TO SPECIFY" TABLE	0 - 150/300	INSERT SEAT CODES FROM TOP ENTRY VALVE "HOW TO SPECIFY" TABLE	5 - 1/2" - 1"	EXAMPLES: 01 - STANDARD (PTFE PACKING, RPTFE BODY SEAL) 24 -GRAPHITE PACKING, SPIRAL WOUND BODY SEAL	A - ISO BONNET CONFIGURATION
		1 - 600		7 - 1-1/2"		
				8 - 2"		
			REPAIR KITS WITH HARD SEATS ALSO INCLUDE THE BALL. THE BALL IS LAPPED TO THE SEATS	0 - 3"		
				A - 4"	THERE MAY BE CASES WHERE MULTIPLE OPTIONS ARE USED: EXAMPLE: -90EP, -24RS, -90EPRS	
				C - 6"		
				E - 8"		
				G - 10"		
				H - 12"		

STANDARD MATERIAL LIST BY SEAT SELECTION

SEAT DESIGNATION	STEM PACKING	BONNET GASKET	STEM BEARING	CLASS	DEFAULT SUFFIX
4	Flexible Graphite	Spiral Wound Graphite	Nitronic 60	All	24
5	Flexible Graphite	Spiral Wound Graphite	PEEK	All	24
6	Flexible Graphite	Spiral Wound Graphite	PEEK	All	24
8	Flexible Graphite	Spiral Wound Graphite	PEEK	All	24
9	Flexible Graphite	Spiral Wound Graphite	Nitronic 60	All	24
B	Flexible Graphite	Spiral Wound Graphite	PEEK	All	24
C	Flexible Graphite	Spiral Wound Graphite	PEEK	All	24
D	Flexible Graphite	Spiral Wound Graphite	PEEK	All	24
G	PTFE	RPTFE	PEEK	150/300	01
		Spiral Wound PTFE	PEEK	600	
H	Flexible Graphite	Spiral Wound Graphite	Nitronic 60	All	24
J	Flexible Graphite	Spiral Wound Graphite	PEEK	All	24
L	Flexible Graphite	Spiral Wound Graphite	PEEK	All	24
M	PTFE	RPTFE	PEEK	150/300	01
		Spiral Wound PTFE	PEEK	600	
N	Flexible Graphite	Spiral Wound Graphite	Nylon	All	24
U	Flexible Graphite	Spiral Wound Graphite	PEEK	All	24

"Apollo"® Valves | INDUSTRIAL PRODUCTS

Needle Valves

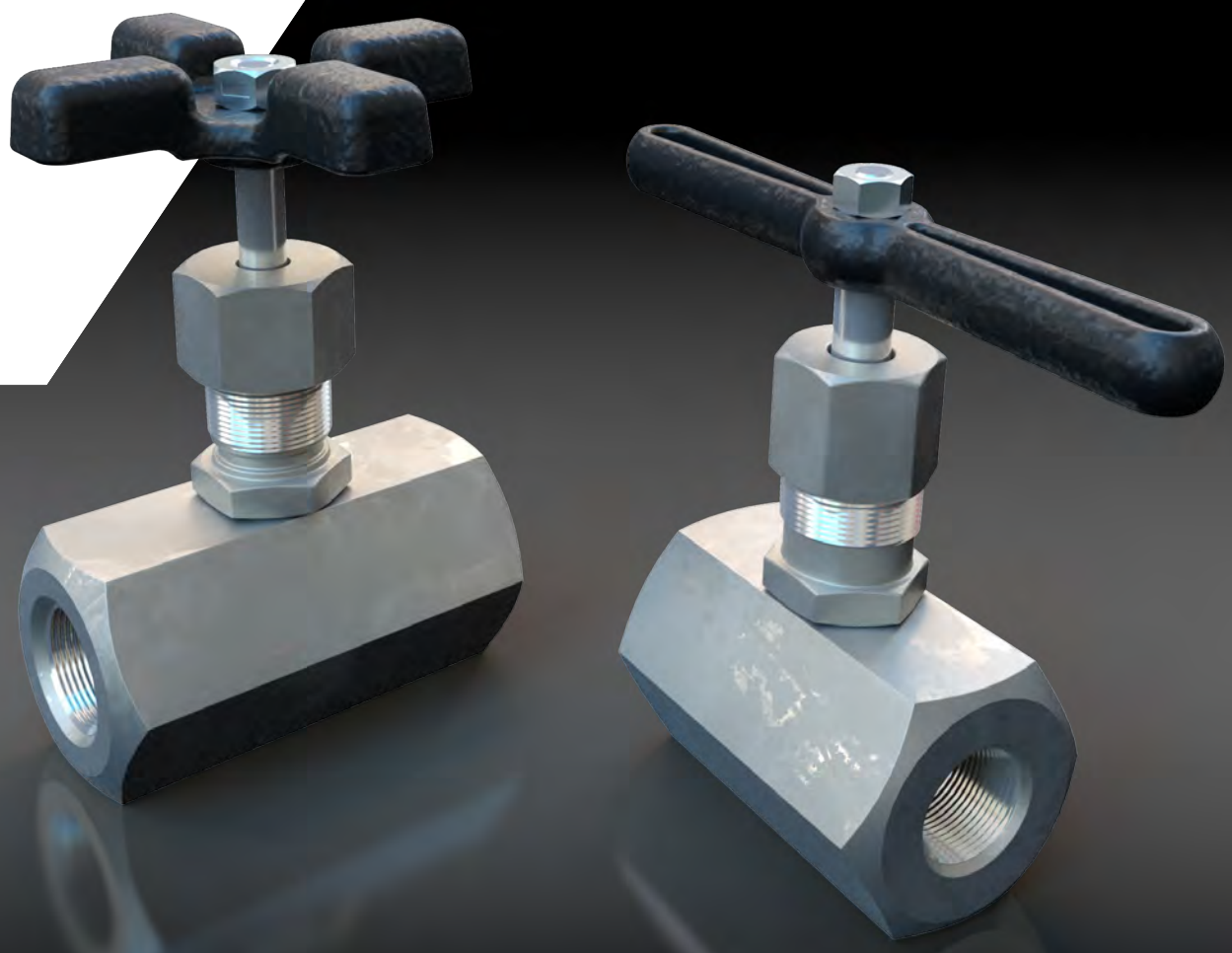

section P

SECTION P

METAL SEATED, GLOBE PATTERN, VEE-TIP, NEEDLE VALVES

SERIES	DESCRIPTION	PAGE
CARBON STEEL		
60A-1XX SERIES	5000 CWP, CS, Metal Seated, Vee-Tip, Needle Valves (globe pattern)	P-3
60B-1XX SERIES	10000 CWP, CS, Metal Seated, Vee-Tip, Needle Valves (globe pattern)	P-5
60B-20X SERIES	10000 CWP, CS, Metal Seated, Vee-Tip, Needle Valves (angle pattern)	P-5
STAINLESS STEEL		
60A-7XX SERIES	5000 CWP, SS, Metal Seated, Vee-Tip, Needle Valves (globe pattern)	P-4
60B-7XX SERIES	10000 CWP, SS, Metal Seated, Vee-Tip, Needle Valves (globe pattern)	P-6
60B-80X SERIES	10000 CWP, SS, Metal Seated, Vee-Tip, Needle Valves (angle pattern)	P-6

60A-100 SERIES

5000 CWP, CARBON STEEL

Female NPT Thread
5,000 CWP (psig)
NACE MR0175 (2000) & MR0103 (2012)

FEATURES

- Backseat stem design reduces pressure exerted on the packing, prolonging packing life. Design also prevents stem from being accidentally turned out of the valve.
- Integral metal-to-metal seat design.
- Externally adjustable PTFE packing is standard, graphoil available as an option.
- Malleable iron handle for long lasting, reliable service.
- All valves 100% pressure tested
- Fully threaded bonnet to accommodate optional panel mounting nut.
- Locking bonnet option available.
- All pressure retaining parts constructed of ASTM materials.
- Meets the requirements of MSS SP-99 & SP-105.

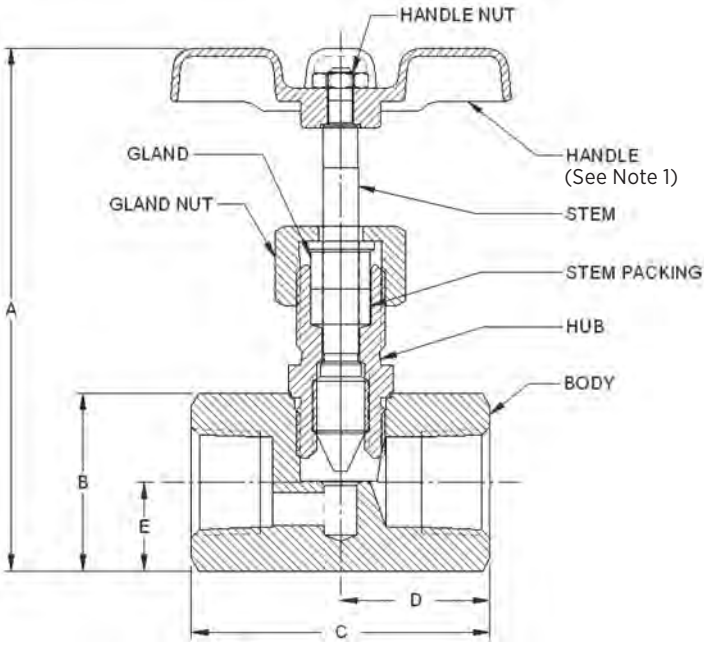

VARIATIONS AVAILABLE

- 60A-12x Series (Socket Weld End Connection)

OPTIONS AVAILABLE

(MORE INFORMATION IN SECTION J)

(SUFFIX)	OPTION	SIZES
-01	Standard Configuration	All
-07-	Steel Tee Handle (See Note 1)	1/4" to 1/2"
-09-	Lock Bonnet	1/4" to 1"
-24-	Graphite Packing	1/4" to 1"
-57-	Oxygen Cleaned	1/4" to 1"
-88-	Panel Mount	1/4" to 1"

Pressure/Temperature Ratings - Page M-22, Graph No. 29

STANDARD MATERIAL LIST

	PART	MATERIAL
1	Body	ASTM A108 Carbon Steel
2	Hub	ASTM A108 Carbon Steel
3	Stem	ASTM A276 Stainless Steel
4	Stem Packing	PTFE
5	Gland	ASTM B484
6	Gland Nut	ASTM A108 Carbon Steel
7	Handle[1]	ASTM A47 Malleable Iron, Zinc Phosphate Finish
8	Handle Nut	Carbon Steel, Zinc Plated

NOTE 1:
1/2" and smaller come standard with cross handle
3/4" and 1" sizes come standard with tee handle

DIMENSIONS

PART NO.	SIZE	A MIN.	A MAX.	B	C	D	E	CV	WT.
60A-101-01	1/4"	3.8	4.1	1.38	2.25	1.13	0.69	0.6	1.23
60A-102-01	3/8"	3.8	4.1	1.38	2.25	1.13	0.69	0.9	1.19
60A-103-01	1/2"	3.8	4.1	1.38	2.75	1.38	0.69	0.8	1.64
60A-104-01	3/4"	4.9	5.4	2.00	3.19	1.60	1.00	2.7	3.34
60A-105-01	1"	4.9	5.4	2.00	3.62	1.81	1.00	2.6	4.24

60A-700 SERIES

5000 CWP, STAINLESS STEEL

Female NPT Thread
5,000 CWP (psig)
NACE MR0175 (2000) & MR0103 (2012)

FEATURES

- Backseat stem design reduces pressure exerted on the packing, prolonging packing life. Design also prevents stem from being accidentally turned out of the valve.
- Integral metal-to-metal seat design.
- Externally adjustable PTFE packing is standard, graphoil available as an option.
- Malleable iron handle for long lasting, reliable service.
- All valves 100% pressure tested
- Fully threaded bonnet to accommodate optional panel mounting nut.
- Locking bonnet option available.
- All pressure retaining parts constructed of ASTM materials.
- Meets the requirements of MSS SP-99 & SP-105.

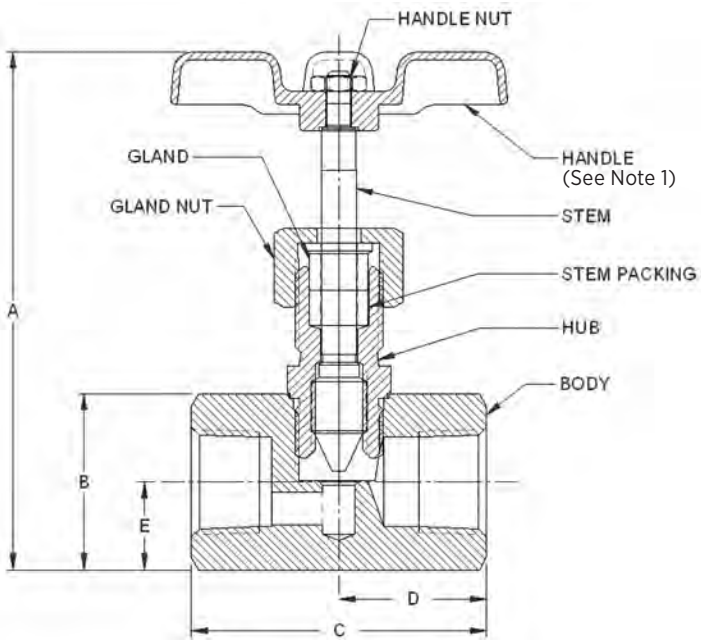

VARIATIONS AVAILABLE

- 60A-72x Series (Socket Weld End Connection)

OPTIONS AVAILABLE

(MORE INFORMATION IN SECTION J)

(SUFFIX)	OPTION	SIZES
-01	Standard Configuration	All
-07-	Steel Tee Handle (See Note 1)	1/4" to 1/2"
-09-	Lock Bonnet	1/4" to 1"
-24-	Graphite Packing	1/4" to 1"
-57-	Oxygen Cleaned	1/4" to 1"
-88-	Panel Mount	1/4" to 1"

Pressure/Temperature Ratings - Page M-22, Graph No. 29

STANDARD MATERIAL LIST

	PART	MATERIAL
1	Body	ASTM A276 316 Stainless Steel
2	Hub	ASTM A276 316 Stainless Steel
3	Stem	ASTM A276 Stainless Steel
4	Stem Packing	PTFE
5	Gland	ASTM B525
6	Gland Nut	ASTM A276 316 Stainless Steel
7	Handle[1]	ASTM A47 Malleable Iron, Zinc Phosphate Finish
8	Handle Nut	Carbon Steel, Zinc Plated

Note 1:
1/2" and smaller come standard with cross handle
3/4" and 1" sizes come standard with tee handle

DIMENSIONS

PART NO.	SIZE	A MIN.	A MAX.	B	C	D	E	CV	WT.
60A-701-01	1/4"	3.8	4.1	1.38	2.25	1.13	0.69	0.6	1.23
60A-702-01	3/8"	3.8	4.1	1.38	2.25	1.13	0.69	0.9	1.19
60A-703-01	1/2"	3.8	4.1	1.38	2.75	1.38	0.69	0.8	1.64
60A-704-01	3/4"	4.9	5.4	2.00	3.19	1.60	1.00	2.7	3.34
60A-705-01	1"	4.9	5.4	2.00	3.62	1.81	1.00	2.6	4.24

60B-100 (GLOBE) & 60B-200 (ANGLE) SERIES

10000 CWP, CARBON STEEL

Female NPT Thread
10,000 CWP (psig)
NACE MR0175 (2000) & MR0103 (2012)

FEATURES

- Backseat stem design reduces pressure exerted on the packing, prolonging packing life. Design also prevents stem from being accidentally turned out of the valve.
- Integral metal-to-metal seat design.
- Externally adjustable PTFE packing is standard, graphoil available as an option.
- Malleable iron handle for long lasting, reliable service.
- All valves 100% pressure tested
- Fully threaded bonnet to accommodate optional panel mounting nut.
- Locking bonnet option available.
- All pressure retaining parts constructed of ASTM materials.

VARIATIONS AVAILABLE

- 60B-12x Series
  (Socket Weld End Connection. Not available on angled valves.)

STANDARD MATERIAL LIST

	PART	MATERIAL
1	Body	ASTM A108 Carbon Steel
2	Hub	ASTM A108 Carbon Steel
3	Stem	ASTM A276 Stainless Steel
4	Stem Packing	PTFE
5	Gland	ASTM B484
6	Gland Nut	ASTM A108 Carbon Steel
7	Handle[1]	ASTM A47 Malleable Iron, Zinc Phosphate Finish
8	Handle Nut	Carbon Steel, Zinc Plated

Note 1:
1/2" and smaller come standard with cross handle
3/4" and 1" sizes come standard with tee handle

OPTIONS AVAILABLE

(MORE INFORMATION IN SECTION J)

(SUFFIX)	OPTION	SIZES
-01	Standard Configuration	All
-07-	Steel Tee Handle (See Note 1)	1/4" to 1/2"
-09-	Lock Bonnet	1/4" to 1"
-24-	Graphite Packing	1/4" to 1"
-57-	Oxygen Cleaned	1/4" to 1"
-88-	Panel Mount	1/4" to 1"

Pressure/Temperature Ratings - Page M-22, Graph No. 30

GLOBE PATTERN

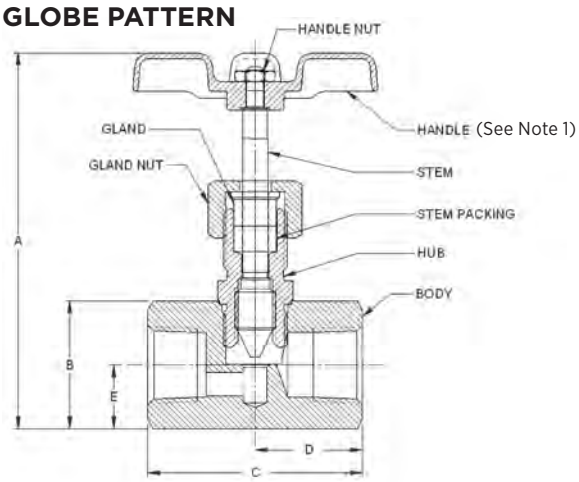

DIMENSIONS

GLOBE PATTERN

PART NO.	SIZE	A MIN.	A MAX.	B	C	D	E	CV	WT.
60B-101-01	1/4"	3.8	4.1	1.38	2.25	1.13	0.69	0.6	1.23
60B-102-01	3/8"	3.8	4.1	1.38	2.25	1.13	0.69	0.9	1.19
60B-103-01	1/2"	3.8	4.1	1.38	2.75	1.38	0.69	0.8	1.64
60B-104-01	3/4"	4.6	5.1	2.00	3.19	1.60	1.00	2.7	3.34
60B-105-01	1"	4.9	5.4	2.00	3.62	1.81	1.00	2.6	4.24

ANGLE PATTERN

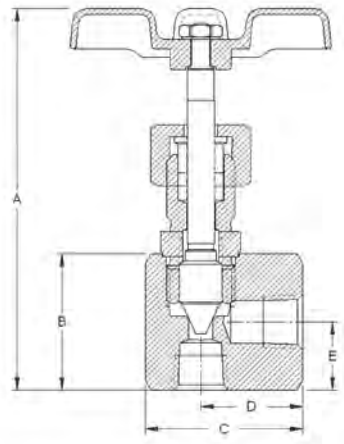

DIMENSIONS

ANGLE PATTERN

PART NO.	SIZE	A MIN.	A MAX.	B	C	D	E	CV	WT.
60B-201-01	1/4"	3.8	4.1	1.38	1.59	1.03	0.69	0.6	0.94
60B-202-01	3/8"	3.8	4.1	1.38	1.59	1.06	0.69	0.9	0.90
60B-203-01	1/2"	3.8	4.1	1.38	2.00	1.37	0.69	0.8	1.34
60B-204-01	3/4"	4.9	5.4	2.00	2.50	1.62	1.00	2.7	2.79
60B-205-01	1"	4.9	5.4	2.00	2.93	1.93	1.00	2.6	3.72

60B-700 (GLOBE) & 60B-800 (ANGLE) SERIES

10000 CWP, STAINLESS STEEL

Female NPT Thread
10,000 CWP (psig)
NACE MR0175 (2000) & MR0103 (2012)

FEATURES

- Backseat stem design reduces pressure exerted on the packing, prolonging packing life. Design also prevents stem from being accidentally turned out of the valve.
- Integral metal-to-metal seat design.
- Externally adjustable PTFE packing is standard, graphoil available as an option.
- Malleable iron handle for long lasting, reliable service.
- All valves 100% pressure tested
- Fully threaded bonnet to accommodate optional panel mounting nut.
- Locking bonnet option available.
- All pressure retaining parts constructed of ASTM materials.

VARIATIONS AVAILABLE

- 60B-72x Series
  (Socket Weld End Connection. Not available on angled valves.)

STANDARD MATERIAL LIST

	PART	MATERIAL
1	Body	ASTM A276 316 Stainless Steel
2	Hub	ASTM A276 316 Stainless Steel
3	Stem	ASTM A276 Stainless Steel
4	Stem Packing	PTFE
5	Gland	ASTM B525
6	Gland Nut	ASTM A276 316 Stainless Steel
7	Handle[1]	ASTM A47 Malleable Iron, Zinc Phosphate Finish
8	Handle Nut	Carbon Steel, Zinc Plated

Note 1:
1/2" and smaller come standard with cross handle
3/4" and 1" sizes come standard with tee handle

OPTIONS AVAILABLE

(MORE INFORMATION IN SECTION J)

(SUFFIX)	OPTION	SIZES
-01	Standard Configuration	All
-07-	Steel Tee Handle (See Note 1)	1/4" to 1/2"
-09-	Lock Bonnet	1/4" to 1"
-24-	Graphite Packing	1/4" to 1"
-57-	Oxygen Cleaned	1/4" to 1"
-88-	Panel Mount	1/4" to 1"

Pressure/Temperature Ratings - Page M-22, Graph No. 30

GLOBE PATTERN

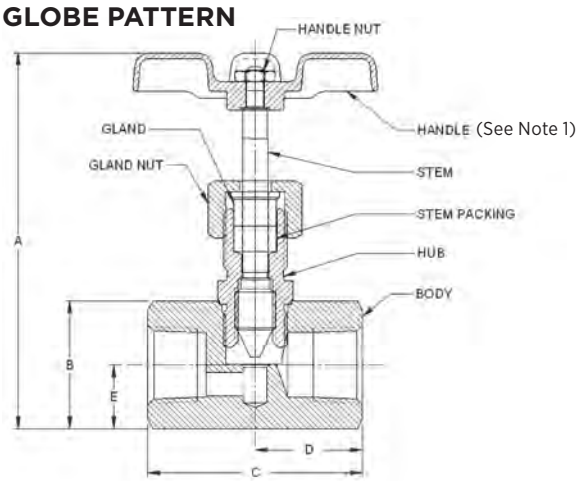

DIMENSIONS

GLOBE PATTERN

PART NO.	SIZE	A MIN.	A MAX.	B	C	D	E	CV	WT.
60B-701-01	1/4"	3.8	4.1	1.38	2.25	1.13	0.69	0.6	1.23
60B-702-01	3/8"	3.8	4.1	1.38	2.25	1.13	0.69	0.9	1.19
60B-703-01	1/2"	3.8	4.1	1.38	2.75	1.38	0.69	0.8	1.64
60B-704-01	3/4"	4.9	5.4	2.00	3.19	1.60	1.00	2.7	3.34
60B-705-01	1"	4.9	5.4	2.00	3.62	1.81	1.00	2.6	4.24

ANGLE PATTERN

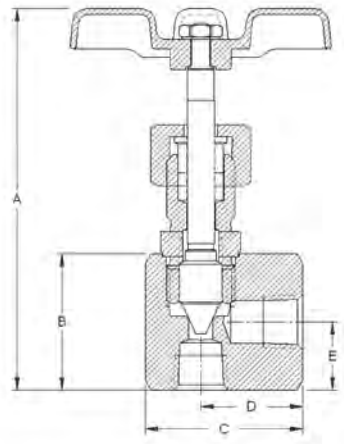

DIMENSIONS

ANGLE PATTERN

PART NO.	SIZE	A MIN.	A MAX.	B	C	D	E	CV	WT.
60B-801-01	1/4"	3.8	4.1	1.38	1.59	1.03	0.69	0.6	0.94
60B-802-01	3/8"	3.8	4.1	1.38	1.59	1.06	0.69	0.9	0.90
60B-803-01	1/2"	3.8	4.1	1.38	2.00	1.37	0.69	0.8	1.34
60B-804-01	3/4"	4.9	5.4	2.00	2.50	1.62	1.00	2.7	2.79
60B-805-01	1"	4.9	5.4	2.00	2.93	1.93	1.00	2.6	3.72

"Apollo" Valves | INDUSTRIAL PRODUCTS

Actuation

section R

SECTION R

ACTUATION

DESCRIPTION	PAGE
PNEUMATIC RACK AND PINION ACTUATORS	
Apollo AD (Double Acting) & AS (Spring Return), Sizes 0012 thru 4000	R 2-25
Apollo Acutorque Rack and Pinion (Stainless Steel)	R 26-31
Scotch Yoke, G-Series	R 32-36
ELECTRIC ACTUATORS	
AE Series	R 37-40
CS & CL Series	R 41-44
LB Series	R 45-47
ACCESSORIES	
Apollo Solenoid Valves, Stonel & Moniteur Limit Switch Assemblies	R 48-51
VRC Positioners	R-52
PMV Positioners	R-53
Proximity Valve Position Monitoring System	R-54
OSHA Lockout Target Device	R-55
Apollo Ball Valve Information	R 56-61
Apollo Butterfly Valve Information	R 62-64

AD & AS SERIES

GENERAL SPECIFICATIONS

TORQUE RANGE

- Double-Acting: 119 to 38510 lbf-in (13.4 to 4338 Nm) at 80 psig (5.5 barg)
- Spring-Return: 41 to 15867 lbf-in (5 to 1793 Nm) spring end torque at maximum spring set.

PRESSURE RANGE

- Double-Acting: 29 to 120 psig (0.2 to 8.3 barg)
- Spring-Return:
  87 to 120 psig (6 to 8.3 barg), with maximum spring set
  43.5 to 120 psig (3 to 8.3 barg), reduced spring quantity

PRESSURE MEDIA

- Air, dry, or lubricated and inert gases
- Dew point at least 10K below ambient temperature
- For sub-zero applications, take appropriate measures
- Mentioned pressure levels are "gauge pressures". Gauge pressure is equal to absolute pressure minus atmospheric pressure.

CYCLE LIFE

- Normal working life is 500,000 cycles according to EN15714-3, where 1 cycle is 1 open stroke and 1 close stroke.

FINISH

- Body: Chromated and polyurethane powder coated
- End Caps: Chromated and polyurethane powder coated
- Pistons: Chromated
- Pinion: Hard anodized
- Fasteners: Stainless steel or Deltatone® coated

LUBRICATION

- Castrol high temperature grease (or equivalent)

TEMPERATURE RANGE

- Standard: -4°F to 176°F (-20°C to 80°C)
- Option:
  Low temperature: -40°F to 176°F (-40°C to 80°C)
  High temperature: +14°F to 250°F (-10°C to 120°C)

ANGLE OF ROTATION

- Factory set at 90°
- Adjustable range:
  Size 0025 to 0600: -5° to +10° and +80° to 95°
  Size 0950 to 4000: -3° to +10° and +80° to 93°

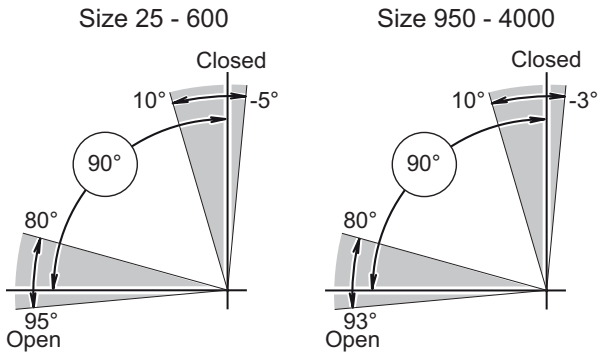

COMPLIANCE TO INTERNATIONAL STANDARDS

- Valve flange: ISO 5211
- Solenoid flange: VDE/VDI 3845 (NAMUR)
- Accessory flange: VDE/VDI 3845 (NAMUR)
- European Directives: ATEX, PED, & Machinery Directive
- SIL 3 rated according to IEC 61508-1-7:2010
- EAC Custom Union: Compliance to Russian TR010 & TR012

AD & AS SERIES

WEIGHTS & CYCLE TIME

ACTUATOR WEIGHTS

ACTUATOR MODEL	DOUBLE ACTING		SPRING RETURN SPRING SET N=6	
	LB.	KG	LB.	KG
0012	1.3	0.6	1.5	0.7
0025	3.1	1.4	3.5	1.6
0040	4.6	2.1	5.1	2.3
0065	6.2	2.8	7.3	3.3
0100	7.7	3.5	9.5	4.3
0150	10.8	4.9	14.6	6.6
0200	13.2	6.0	18.3	8.3
0350	22	10.2	32	14.5
0600	44	20	57	26
0950	58	26	89	41
1600	91	41	137	62
2500	141	64	221	100
4000	226	103	325	147

CYCLE TIME (SEC)

ACTUATOR MODEL	SPRING RETURN		DOUBLE ACTING	
	OPENING STROKE	CLOSING STROKE	OPENING STROKE	CLOSING STROKE
12	0.4	0.4	0.4	0.4
25	0.5	0.4	0.5	0.4
40	0.6	0.5	0.6	0.5
65	0.7	0.5	0.6	0.6
100	0.8	0.6	0.8	0.7
150	1	0.8	0.9	0.8
200	1.3	0.9	1	1
350	1.9	1.3	1.4	1.5
600	3.2	1.9	2.2	2.2
950	6.6	2.2	2.4	2
1600	10.6	3.5	3.6	3.3
2500	16.9	5.7	5.8	5.2
4000	29.1	9.2	9.2	9

Test conditions:

1. *Solenoid with flow capacity: 0.6 m3/hr.*
2. *Pipe diameter: 6 mm*
3. *Medium: clean air*
4. *Supply pressure: 5.5 barg/80 psig*
5. *Load: with average load*
6. *Stroke: 90°*
7. *Temperature: Room temperature*

AD & AS SERIES

AIR VOLUMES AND CONSUMPTION

ACTUATOR AIR VOLUMES AND CONSUMPTION

ACTUATOR MODEL	ACTUATOR VOLUMES (CU.IN.)			CONSUMPTION PER STROKE (IN CU.IN., PRESSURE IN PSIG)					
				OUTWARD STROKE			INWARD STROKE		
				DOUBLE ACTING & SPRING RETURN			DOUBLE ACTING ONLY		
	CENTRAL CHAMBER[1]	END CAP CHAMBER[2]	DISPLACED VOLUME[3]	40 PSIG	80 PSIG	120 PSIG	40 PSIG	80 PSIG	120 PSIG
12	3.1	3.7	2.5	11	19	28	13	23	33
25	8.5	12.2	4.7	28	52	75	38	72	106
40	15.9	23	8.9	53	96	140	71	133	196
65	24	34	13.5	81	148	215	107	200	294
100	36	53	19.9	118	216	314	165	310	455
150	58	47	32	192	352	512	163	293	424
200	76	64	44	255	466	676	220	397	573
350	131	115	76	436	796	1157	392	709	1025
600	222	201	129	742	1354	1967	683	1237	1790
950	301	279	196	1025	1854	2682	966	1735	2505
1600	484	447	328	1662	2997	4331	1560	2792	4024
2500	769	728	508	2630	4751	6873	2515	4523	6530
4000	1324	1159	825	4477	8130	11782	4022	7219	10416

Notes:
[1] For double-acting and spring-return. Pistons at 90° outward position.
[2] Only for double-acting. Pistons at 0° inward position.
[3] Stroke is 90°.

CENTRAL AIR CHAMBER VOLUME
DOUBLE-ACTING AND SPRING-RETURN

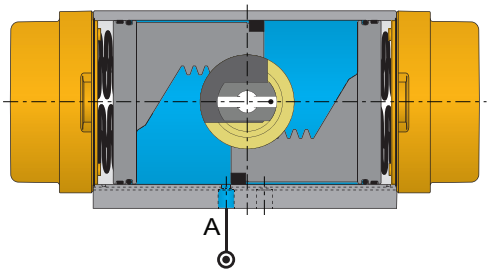

END CAP AIR CHAMBER VOLUME
DOUBLE-ACTING ONLY

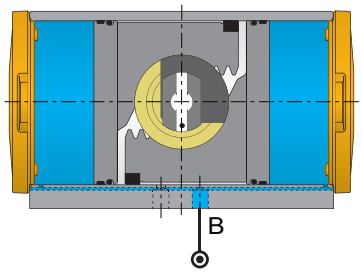

AD & AS SERIES

PARTS LIST - SIZE 0012

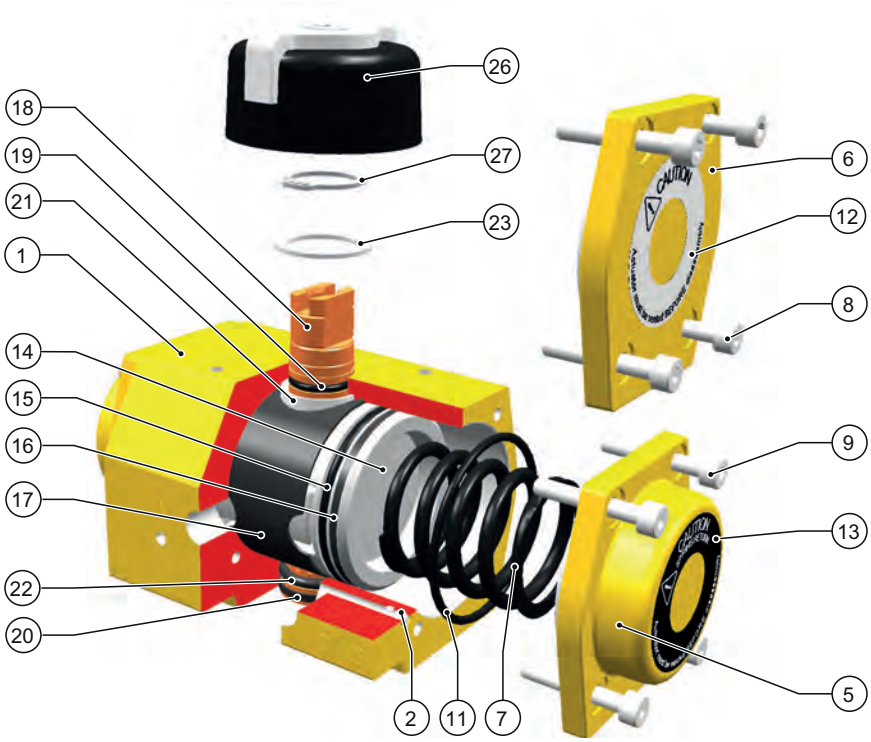

PART	QTY	NOTES	DESCRIPTION	MATERIAL
1	1	2	House	Extruded aluminum alloy
2	2	1	B-port ball	Steel
5	2	2	End cap SR	Cast Aluminum alloy
6	2	2	End cap DA	Cast Aluminum alloy
7	Max. 2	5	Springs	Spring steel
8	8		End cap screw DA	Stainless steel
9	8		End cap screw SR	Stainless steel
11	2	1	O-ring end cap	Nitrile rubber
12	2		Warning sticker DA	Polyester
13	2		Warning sticker SR	Polyester
14	2	3	Piston	Cast Aluminum alloy
15	2	1	Bearing piston	PTFE 25% carbon-filled
16	2	1	O-ring piston	Nitrile rubber
17	1	1	Guide band	Nylatron
18	2	4	Pinion	High grade aluminum
19	1	1	Bearing pinion top	POM
20	1	1	Bearing pinion bottom	POM
21	1	1	O-ring pinion top	Nitrile rubber
22	1	1	O-ring pinion bottom	Nitrile rubber
23	1	1	Thrust bearing pinion	POM, black UV stabilized
26	1		Indicator assembly	ABS + stainless steel screw
27	1	1,6	Circlip	Spring steel

Notes:

1. *Included in service kit.*
2. *Chromated and polyurethane powder coated.*
3. *Chromated.*
4. *Hard anodized.*
5. *Electrophoretic coated.*
6. *Deltatone® coated.*

AD & AS SERIES

PARTS LIST - SIZES 0025 TO 0600

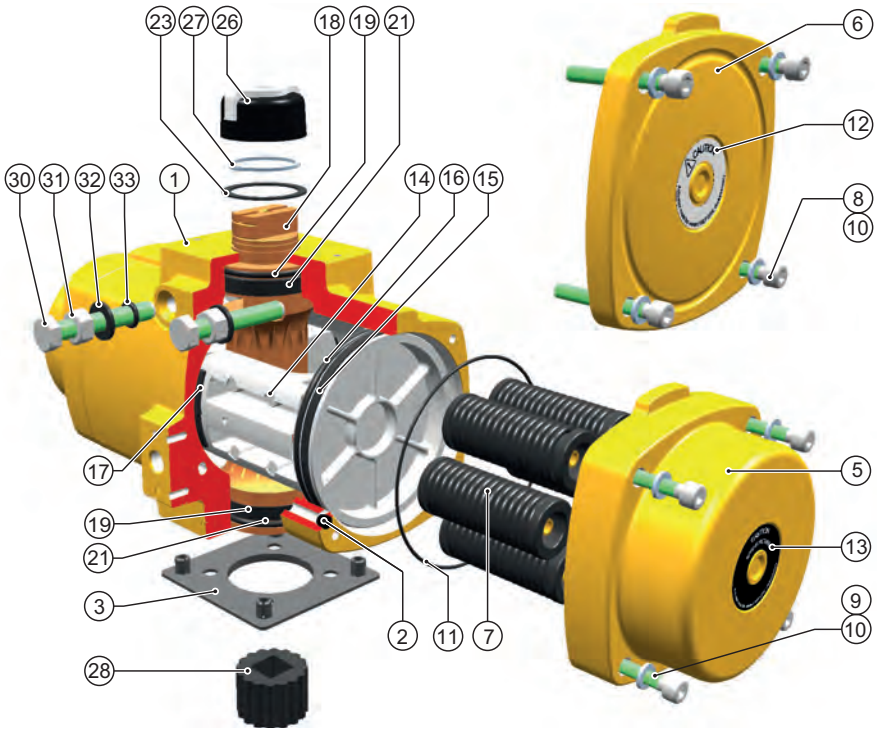

PART	QTY	NOTES	DESCRIPTION	MATERIAL
1	1	2	House	Cast Aluminum alloy
2	2	1	B-port seal	Nitrile rubber
3	1		Center plate (option)	Nylon PA6, Black
5	2	2, 8	End cap SR (DA)	Cast Aluminum alloy
6	2	2, 8	End cap DA	Cast Aluminum alloy
7	Max. 12	5	Spring cartridge	Spring steel
8	8		End cap screw DA	Stainless steel
9	8		End cap screw SR	Stainless steel
10	8		End cap screw washer	Stainless steel
11	2	1	O-ring end cap	Nitrile rubber
12	2		Warning sticker DA	Polyester
13	2		Warning sticker SR	Polyester
14	2	3	Piston	Cast Aluminum alloy
15	2	1	Bearing piston	PTFE 25% carbon-filled
16	2	1	O-ring piston	Nitrile rubber
17	2	1	Bearing strip piston rack	POM
18	2	4	Pinion	High grade aluminum
19	2	1	Bearing pinion	POM
21	2	1	O-ring pinion	Nitrile rubber
23	1	1	Thrust bearing pinion	POM, black UV stabilized
26	1		Indicator assembly	ABS + stainless steel screw
27	1	1, 6	Circlip	Spring steel
28	1	7	Drive insert	Aluminum
30	2		Limit stop screw	Stainless steel
31	2		Limit stop nut	Stainless steel
32	2	1	Limit stop washer	PA66
33	2	1	O-ring limit stop	Nitrile rubber

Notes:

1. *Included in service kit.*
2. *Chromated and polyurethane powder coated.*
3. *Chromated.*
4. *Hard anodized.*
5. *Electrophoretic coated.*
6. *Deltatone® coated.*
7. *Anodized*
8. *High end caps for double-acting & spring-return models up to size 0100.*
   Low end caps for double-acting models for sizes 0150 & larger.

AD & AS SERIES

PARTS LIST - SIZES 0950 TO 2500

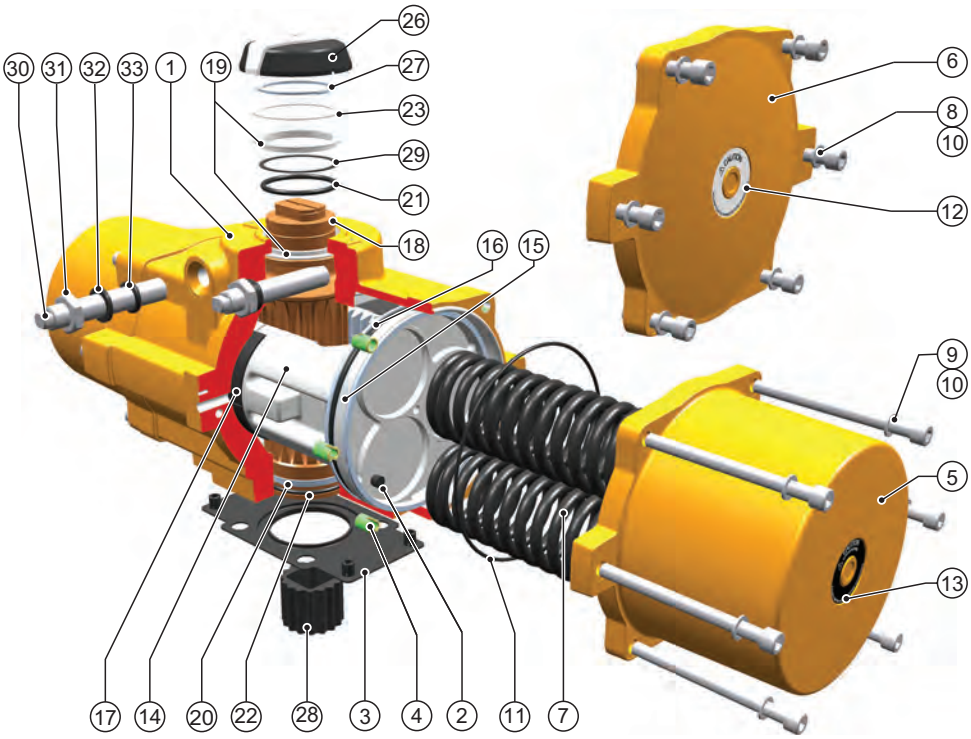

PART	QTY	NOTES	DESCRIPTION	MATERIAL
1	1	2	House	Cast Aluminum alloy
2	2	1	B-port seal	Nitrile rubber
3	1		Center plate (option)	Nylon PA6, Black
4	12-Aug	8	Thread insert	Steel
5	2	2	End cap SR	Cast Aluminum alloy
6	2	2	End cap DA	Cast Aluminum alloy
7	Max. 6	5	Springs	Spring steel
8	12-Aug	8	End cap screw DA	Stainless steel
9	12-Aug	8	End cap screw SR	Stainless steel
10	12-Aug	8	End cap screw washer	Stainless steel
11	2	1	O-ring end cap	Nitrile rubber
12	2		Warning sticker DA	Polyester
13	2		Warning sticker SR	Polyester
14	2	3	Piston	Cast Aluminum alloy
15	2	1	Bearing piston	PTFE 25% carbon-filled
16	2	1	O-ring piston	Nitrile rubber
17	2	1	Bearing strip piston rack	POM
18	1	4	Pinion	High grade aluminum
19	2	1	Bearing pinion top	POM
20	1	1	Bearing pinion bottom	POM
21	1	1	O-ring pinion top	Nitrile rubber
22	1	1	O-ring pinion bottom	Nitrile rubber
23	1	1	Thrust bearing pinion	POM, black UV stabilized
26	1		Indicator assembly	ABS + stainless steel screw
27	1	1, 6	Circlip	Spring steel
28	1	7	Drive insert	Aluminum
29	1	1	Backup ring	POM
30	2		Limit stop screw	Stainless steel

Notes:
1. *Included in service kit.*
2. *Chromated and polyurethane powder coated.*
3. *Chromated.*
4. *Hard anodized.*
5. *Electrophoretic coated.*
6. *Deltatone® coated.*
7. *Anodized.*
8. *8x for size 0950*

AD & AS SERIES

PARTS LIST - SIZE 4000

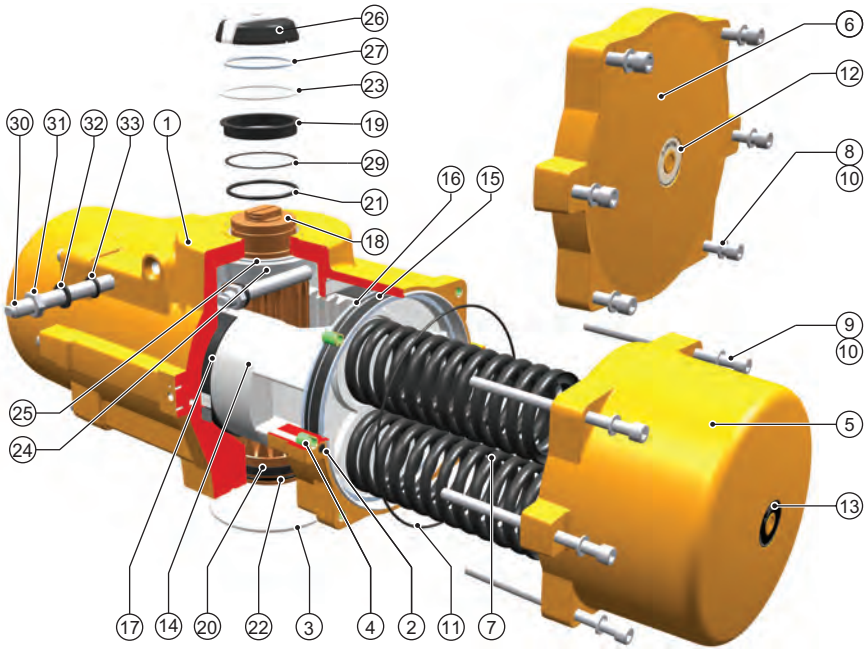

PART	QTY	NOTES	DESCRIPTION	MATERIAL
1	1	2	House	Cast Aluminum alloy
2	2	1	B-port seal	Nitrile rubber
3	1		Center ring	Stainless Steel AISI 304
4	12		Thread insert	Steel
5	2	2	End cap SR	Cast Aluminum alloy
6	2	2	End cap DA	Cast Aluminum alloy
7	Max. 6	5	Springs	Spring steel
8	12		End cap screw DA	Stainless steel
9	12		End cap screw SR	Stainless steel
10	12		End cap screw washer	Stainless steel
11	2	1	O-ring end cap	Nitrile rubber
12	2		Warning sticker DA	Polyester
13	2		Warning sticker SR	Polyester
14	2	3	Piston assembly	Cast Aluminum alloy
15	2	1	Bearing piston	PTFE 25% carbon-filled
16	2	1	O-ring piston	Nitrile rubber
17	2	1	Bearing strip piston rack	POM
18	1	4	Pinion	High grade aluminum
19	1	1	Bearing pinion top	POM
20	1	1	Bearing pinion bottom	POM
21	1	1	O-ring pinion top	Nitrile rubber
22	1	1	O-ring pinion bottom	Nitrile rubber
23	1	1	Thrust washer pinion	POM, black UV stabilized
24	1		Cam stroke adjustment	Steel
25	1	1	Cam thrust washer	POM, black UV stabilized
26	1		Indicator assembly	ABS + stainless steel screw
27	1	1, 6	Circlip	Spring steel
29	1	1	Backup ring	POM
30	2		Limit stop screw	Stainless steel
31	2		Limit stop nut	Stainless steel
32	2	1	Limit stop washer	PA66
33	2	1	O-ring limit stop	Nitrile rubber

Notes:
1. *Included in service kit.*
2. *Chromated and polyurethane powder coated.*
3. *Chromated.*
4. *Hard anodized.*
5. *Electrophoretic coated.*
6. *Deltatone® coated.*
7. *Anodized.*
8. *8x for size 0950*

aalberts integrated piping systems

CORROSION PROTECTION SYSTEM

The corrosion protection system of a standard Apollo pneumatic actuator consists of the following treatments or materials:

ELECTROPHORETIC FINISH ON SPRINGS

- Springs are protected from corrosion using an electrophoretic finish.

CHROMATE PRE-TREATMENT

- The housing and end caps get a chromate pre-treatment prior to coating. The pre-treatment takes care of a perfect bonding of the coating layer to the aluminum housing and gives additional corrosion protection to the bore of the housing.

POWDER COAT

- Polyurethane powder coating for exterior use.
- The powder coating is applied cold using automatic electrostatic spray equipment and is cured for about 10 minutes at a minimum of 200°C (392°F) offering excellent light and weather resistance.
- The powder coating thickness is between 80 and 160 microns (3.15 and 6.3 mils).
- Good chemical resistance against most bases, acids, solvents, alkalis, and oils at normal temperatures.
- Excellent exterior mechanical durability.
- The coating has passed a salt spray test according to ASTM B117 for 1,000 hours.
- The powder coating is virtually solvent free, and therefore environmentally friendly.

HIGH GRADE & HARD ANODIZED ALUMINUM PINION

- Actuators with high grade & hard anodized aluminum pinions have passed a 1,000 hours salt spray test.

STAINLESS STEEL OR DELTATONE® TREATED EXTERNAL STEEL PARTS

- External parts are stainless steel or steel alloy with a Deltatone® treatment for optimum protection and durability.

THE CHEMICAL AND DURABILITY ASSESSMENT

- All these components, treatments and finishes, including the durable pinion design, anodized surface finish, standard powder coat paint and stainless steel treated external fasteners shows no decline of actuator functions after 1,000 hours salt spray test.

TECHNICAL DATA

- Coating: Polyurethane powder coating for exterior use.
- Salt spray test: ASTM B117: 1,000 hours
- Color: Yellow
- Materials:
  Housing: Chromated aluminum alloy
  Endcaps: Chromated aluminum alloy
  Pistons: Chromated aluminum alloy
  Pinion: High grade aluminum alloy, hard anodized
- Springs: Electrophoretic finish
- Fasteners: Stainless steel or alloy steel with Deltatone® treatment
- Type Sticker: Nylon

POLYURETHANE POWDER COATING - TEST RESULTS

NO.	ITEM	STANDARD	SPECIFICATION
1	Hardness	ASTM D3363 Pencil (Mitsubishi Uni)	H
2	Adhesion	ISO 2409, ASTM D3359 Cross hatch test (2 mm)	Gt (0) 100% Adhesion
3	Impact test	ASTM D2794 5/8" Ball (direct)	Min. 60 lb.in. without detachment
4	Bend test	DIN 53152, ISO1519, ASTM D522	Min. 3.2 mm without cracking
5	Resistance to humidity	ASTM D543 3% H2S04, 4 hours	No Blistering
6	Alkali resistance	ASTM D543 10% NaOH, 4 hours	No Blistering
7	Water resistance	DIN 50017, min.	No Blistering
8	UV resistance	ASTM G 154 (UVB-313)	Excellent color and gloss retentionion

Note: Contains general information as supplied by the paint supplier and describes typical properties of the coating.

ASSEMBLY CODES

SPRING RETURN (AS) ACTUATORS

ASSEMBLY CODE: -ACA

- Standard orientation, clockwise-to-close, fail-close

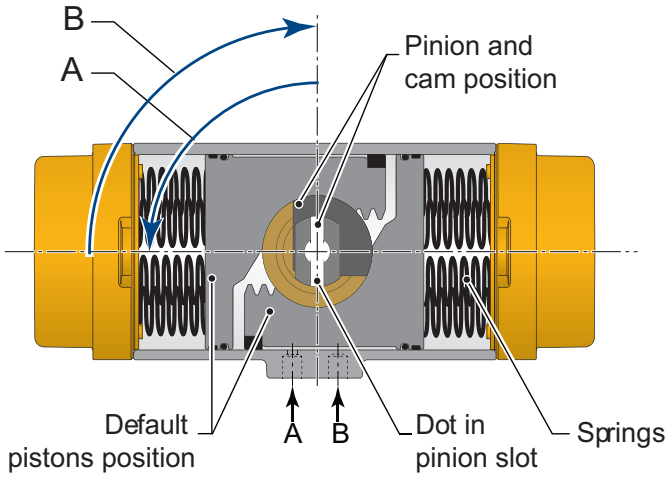

ASSEMBLY CODE: -AFA

- Reverse, Counterclockwise-to-close, fail-open

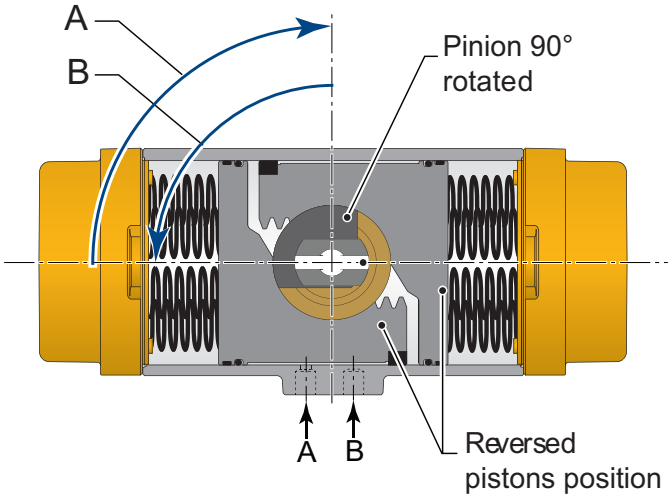

All views are from above. Pistons are shown in inward positions.
A = Central air chamber pressurized
B = Spring Stroke

ASSEMBLY CODES

DOUBLE-ACTING (AD) ACTUATORS

ASSEMBLY CODE: -ACA

- Standard orientation, clockwise-to-close

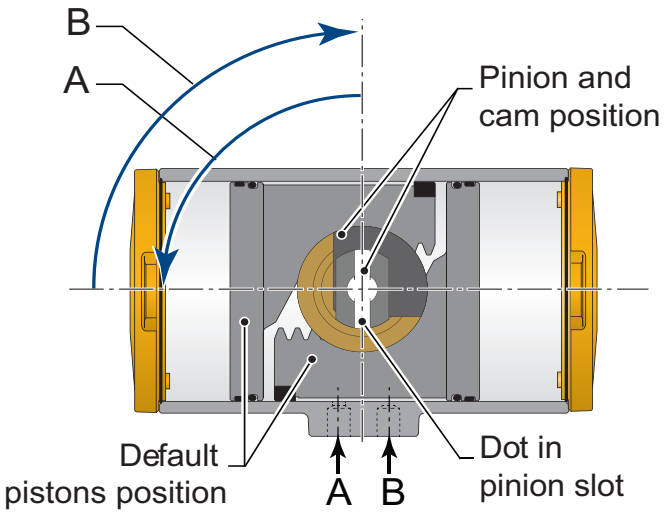

ASSEMBLY CODE: -AFA

- Reverse, counterclockwise-to-open

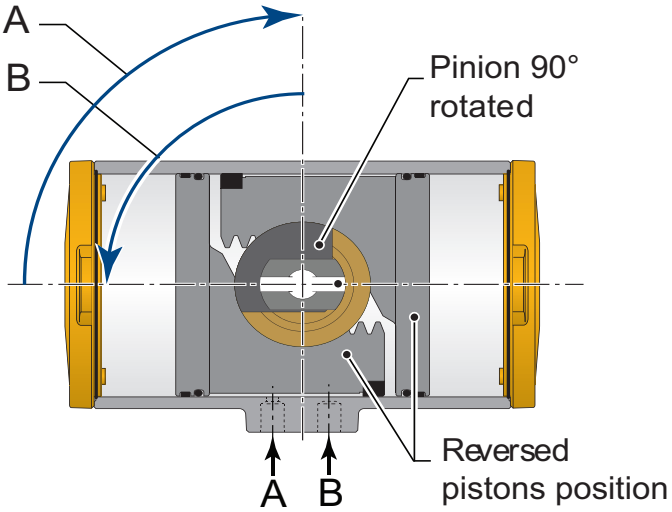

All views are from above. Pistons are shown in inward positions.
A = Central air chamber pressurized
B = Spring Stroke

ACTUATOR TORQUE

SPRING RETURN (LBF.IN.)

ACTUATOR SIZE	SPRING SET #	SPRING STROKE TORQUE (LBF.IN.)		AIR STROKE TORQUE SUPPLY PRESSURE (LBF.IN.)															
				40 PSIG		50 PSIG		60 PSIG		70 PSIG		80 PSIG		90 PSIG		100 PSIG		120 PSIG	
		START	END	START	END	START	END	START	END	START	END	START	END	START	END	START	END	START	END
AS0012	2	64	41	-	-	31	5	47	21	63	37	79	53	95	69	111	84	142	116
AS0025	1	31	20	93	80	123	109	152	139	181	168	211	198	240	227	270	257	329	316
	2	63	39	70	44	100	73	129	103	159	132	188	162	218	191	247	221	306	280
	3	94	59	48	8	77	37	107	67	136	96	166	126	195	155	225	185	283	244
	4	125	79	-	-	-	-	84	31	113	60	143	90	172	119	202	149	261	208
	5	156	99	-	-	-	-	-	-	91	24	120	54	150	83	179	113	238	172
	6	188	118	-	-	-	-	-	-	-	-	98	18	127	47	157	77	216	136
AS0040	1	58	37	175	150	230	206	285	261	341	316	396	371	451	427	506	482	617	592
	2	116	73	133	84	188	139	243	195	299	250	354	305	409	360	464	415	575	526
	3	174	110	91	18	146	73	201	128	257	183	312	239	367	294	422	349	533	459
	4	231	146	-	-	-	-	159	62	214	117	270	172	325	227	380	283	491	393
	5	289	183	-	-	-	-	-	-	172	50	228	106	283	161	338	216	449	327
	6	347	220	-	-	-	-	-	-	-	-	186	39	241	94	296	150	407	260
AS0065	1	90	57	265	227	349	311	434	395	518	479	602	564	686	648	770	732	939	900
	2	181	114	200	123	284	207	368	291	452	376	537	460	621	544	705	628	873	796
	3	271	171	134	19	219	103	303	188	387	272	471	356	555	440	639	524	808	693
	4	361	228	-	-	-	-	237	84	322	168	406	252	490	336	574	420	742	589
	5	452	285	-	-	-	-	-	-	256	64	340	148	424	232	509	317	677	485
	6	542	341	-	-	-	-	-	-	-	-	275	44	359	129	443	213	612	381
AS0100	1	131	83	394	339	518	463	643	588	767	712	892	836	1016	961	1141	1085	1390	1334
	2	262	166	299	188	423	313	548	437	672	562	797	686	921	811	1046	935	1295	1184
	3	392	248	203	38	328	162	452	287	577	411	701	536	826	660	950	785	1199	1034
	4	523	331	-	-	-	-	357	136	482	261	606	385	731	510	855	634	1104	883
	5	654	414	-	-	-	-	-	-	387	110	511	235	636	359	760	484	1009	733
	6	785	497	-	-	-	-	-	-	-	-	416	85	540	209	665	334	914	583
AS0150	1	208	131	633	544	832	743	1031	942	1231	1142	1430	1341	1629	1540	1829	1740	2227	2138
	2	416	262	482	304	681	504	881	703	1080	902	1279	1102	1479	1301	1678	1500	2077	1899
	3	625	393	332	65	531	264	730	464	930	663	1129	862	1328	1062	1528	1261	1926	1660
	4	833	524	-	-	-	-	580	224	779	424	979	623	1178	823	1377	1022	1776	1421
	5	1041	654	-	-	-	-	-	-	629	185	828	384	1027	583	1227	783	1626	1181
	6	1249	785	-	-	-	-	-	-	-	-	678	145	877	344	1076	543	1475	942
AS0200	1	289	182	862	739	1135	1012	1408	1285	1681	1558	1954	1831	2226	2104	2499	2376	3045	2922
	2	578	364	653	407	926	680	1198	953	1471	1226	1744	1499	2017	1774	2290	2044	2836	2590
	3	867	547	443	75	716	348	989	621	1262	894	1535	1166	1808	1439	2080	1712	2626	2258
	4	1156	729	-	-	-	-	780	289	1052	561	1325	834	1598	1107	1871	1380	2417	1926
	5	1445	911	-	-	-	-	-	-	843	229	1116	502	1389	775	1662	1048	2207	1593
	6	1734	1093	-	-	-	-	-	-	-	-	906	170	1179	443	1452	716	1998	1261

= Standard Spring Set

SPRING RETURN TORQUE DIAGRAM

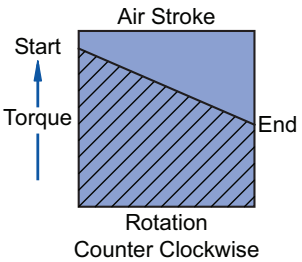

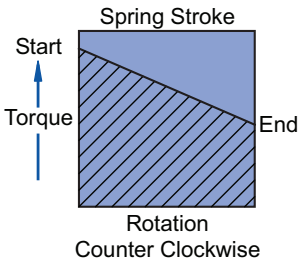

ACTUATOR TORQUE

SPRING RETURN (LBF.IN.)

ACTUATOR SIZE	SPRING SET #	SPRING STROKE TORQUE (LBF.IN.)		AIR STROKE TORQUE SUPPLY PRESSURE (LBF.IN.)															
				40 PSIG		50 PSIG		60 PSIG		70 PSIG		80 PSIG		90 PSIG		100 PSIG		120 PSIG	
		START	END	START	END	START	END	START	END	START	END	START	END	START	END	START	END	START	END
AS0350	1	495	312	1503	1293	1978	1767	2452	2241	2926	2716	3400	3190	3874	3664	4348	4138	5296	5086
	2	990	624	1145	724	1619	1199	2093	1673	2567	2147	3041	2621	3515	3095	3990	3569	4938	4517
	3	1485	936	786	156	1261	630	1735	1104	2209	1578	2683	2052	3157	2526	3631	3000	4579	3948
	4	1979	1248	-	-	-	-	1376	535	1850	1009	2324	1483	2798	1957	3272	2431	4221	3380
	5	2474	1560	-	-	-	-	-	-	1492	440	1966	914	2440	1388	2914	1863	3862	2811
	6	2969	1872	-	-	-	-	-	-	-	-	1607	346	2081	820	2555	1294	3504	2242
AS0600	1	848	534	2551	2190	3356	2996	4162	3801	4968	4607	5773	5413	6579	6218	7385	7024	8996	8635
	2	1695	1068	1937	1216	2743	2021	3548	2827	4354	3633	5160	4438	5965	5244	6771	6050	8382	7661
	3	2543	1601	1324	241	2129	1047	2935	1853	3741	2658	4546	3464	5352	4270	6158	5075	7769	6687
	4	3391	2135	-	-	-	-	2321	878	3127	1684	3933	2490	4738	3295	5544	4101	7155	5712
	5	4238	2669	-	-	-	-	-	-	2513	710	3319	1515	4125	2321	4930	3127	6542	4738
	6	5086	3203	-	-	-	-	-	-	-	-	2706	541	3511	1346	4317	2152	5928	3763
AS0950	1	1070	685	3842	3360	5038	4556	6234	5752	7430	6948	8627	8144	9823	9340	11019	10536	13411	12929
	2	2141	1369	2986	2022	4182	3218	5379	4414	6575	5610	7771	6806	8967	8002	10163	9198	12555	11591
	3	3211	2054	2130	683	3327	1880	4523	3076	5719	4272	6915	5468	8111	6664	9307	7860	11699	10252
	4	4282	2738	-	-	2471	541	3667	1738	4863	2934	6059	4130	7255	5326	8451	6522	10844	8914
	5	5352	3423	-	-	-	-	2811	399	4007	1596	5203	2792	6400	3988	7696	5184	9988	7576
	6	6423	4108	-	-	-	-	-	-	3152	257	4318	1454	5544	2650	6740	3846	9132	6238
AS1600	1	1835	1141	6447	5579	8452	7583	10456	9588	12461	11592	14466	13597	16470	15602	18475	17606	22484	21615
	2	3671	2281	5022	3284	7026	5289	9031	7294	11035	9298	13040	11303	15044	13307	17049	15312	21058	19321
	3	5506	3422	3596	990	5600	2995	7605	4999	9610	7004	11614	9008	13619	11013	15623	13018	19632	17027
	4	7342	4562	-	-	4175	700	6179	2705	8184	4709	10188	6714	12193	8719	14198	10723	18207	14732
	5	9177	5703	-	-	-	-	4753	411	6758	2415	8763	4420	10767	6424	12772	8429	16781	12438
	6	11013	6844	-	-	-	-	-	-	-	-	7337	2125	9342	4130	11346	6135	15355	10144
AS2500	1	2607	1597	10204	8941	13310	12047	16416	15153	19523	18259	22629	21366	25735	24472	28841	27578	35054	33791
	2	5215	3194	8208	5681	11314	8788	14420	11894	17526	15000	20633	18106	23739	21213	26845	24319	33058	30532
	3	7822	4791	6211	2422	9318	5528	12424	8635	15530	11741	18636	14847	21743	17953	24849	21060	31062	27272
	4	10430	6388	-	-	7321	2269	10428	5375	13534	8482	16640	11588	19747	14694	22853	17800	29065	24013
	5	13037	7985	-	-	-	-	8432	2116	11538	5222	14644	8329	17750	11435	20857	14541	27069	20754
	6	15645	9582	-	-	-	-	-	-	9542	1963	12648	5069	15754	8176	18860	11282	25073	17494
AS4000	1	4183	2645	16495	14572	21537	19613	26578	24655	31620	29696	36661	34738	41703	39780	46744	44821	56828	54904
	2	8366	5289	13189	9343	18231	14384	23273	19426	28314	24467	33356	29509	38397	34550	43439	39592	53522	49675
	3	12550	7934	9884	4114	14925	9155	19967	14197	25008	19238	30050	24280	35092	29321	40133	34363	50216	44446
	4	16733	10578	-	-	11620	3926	16661	8968	21703	14009	26744	19051	31786	24092	36827	29134	46911	39217
	5	20916	13223	-	-	-	-	13355	3739	18397	8780	23439	13822	28480	18863	33522	23905	43605	33988
	6	25099	15867	-	-	-	-	-	-	15091	3551	20133	8593	25174	13634	30216	18676	40299	28759

= Standard Spring Set

SPRING RETURN TORQUE DIAGRAM

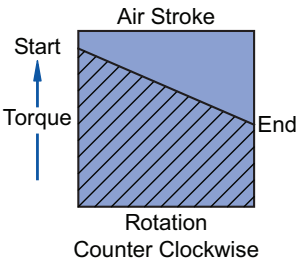

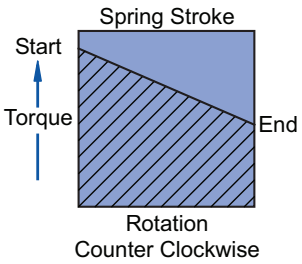

ACTUATOR TORQUE

DOUBLE ACTING (LBF.IN.)

ACTUATOR SIZE	TORQUE (LBF.IN.) @ SUPPLY PRESSURE (PSIG)												
	30	35	40	45	50	55	60	70	75	80	90	100	120
AD0012	44	51	59	66	74	81	89	104	112	119	134	149	179
AD0025	81	95	109	123	137	151	165	193	207	220	248	276	332
AD0040	153	179	205	231	257	283	309	361	387	413	466	518	622
AD0065	233	272	312	352	392	431	471	550	590	630	709	789	948
AD0100	344	403	461	520	579	638	696	814	873	931	1049	1166	1401
AD0150	551	645	739	833	927	1021	1115	1304	1398	1492	1680	1868	2244
AD0200	754	883	1011	1140	1269	1398	1527	1784	1913	2042	2299	2557	3072
AD0300	1310	1534	1758	1981	2205	2429	2653	3100	3324	3547	3995	4442	5337
AD0600	2226	2606	2987	3367	3747	4127	4508	5268	5648	6028	6789	7549	9070
AD0950	3374	3950	4527	5103	5679	6255	6832	7984	8560	9137	10289	11442	13747
AD1600	5654	6620	7586	8552	9517	10483	11449	13380	14346	15312	17243	19175	23038
AD2500	8762	10259	11755	13252	14748	16245	17741	20734	22231	23727	26720	29713	35699
AD4000	14221	16650	19079	21508	23937	26365	28794	33652	36081	38510	43368	48225	57941

= Standard Spring Set

DOUBLE ACTING TORQUE DIAGRAM

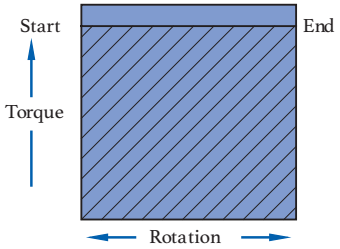

aalberts integrated piping systems

PART NUMBER MATRIX

PART NUMBER MATRIX

A	S	0100	N	04	A	C	A
PREFIX	ACTION	SIZE	SEAL OPTION	SPRING SET	INSERTS	FAIL POSITION	REVISION
A	D - DOUBLE ACTING	0012	N - NITRILE NORMAL TEMP RANGE: -4°F - 175°F	00 (DA)	A - STANDARD SQUARE	C - FAIL CLOSED (FC)	A
	S - SPRING RETURN	0025		02	B - WITHOUT INSERT	F - FAIL OPEN (FO)	
	K - KIT	0040		03		D - NO SPRING (DOUBLE ACTING FAIL LAST POSITION)	
		0065	H - FLUOROCARBON HIGH TEMP RANGE: -4°F - 250°F	04			
		0100		05			
		0150		06			
		0200	L - SILICONE LOW TEMP RANGE: -40°F - 175°F				
		0350					
		0600					
		0950					
		1600		EXAMPLE: AS0100N04ACA = Spring Return, 0100 Size, Nitrile Seals, 04 Spring Set, Standard Square Drive, Fail Closed			
		2500					
		4000					

SIZING OF RACK & PINION ACTUATOR

Sizing is the selection procedure to select the right size of actuator on a valve with a given torque characteristic. The following information gives brief examples on how to size actuators and which data is needed.

TORQUE CHARACTERISTICS OF VALVES

Apollo actuators are commonly used to operate butterfly, ball, and plug valves. The instructions below are intended for these types of valve applications, but can also be used for other quarter-turn applications.

GENERIC

TORQUE CHARACTERISTICS

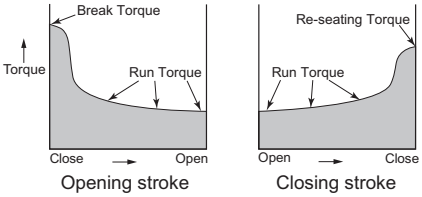

VALVE TORQUE VALUES AND SAFETY FACTORS

Establish the valve operating torque beginning with the torque constants for the appropriate pressure and valve. Use the torque adjustment factors to arrive at an in-service torque. Multiple adjustment factors may be required. Do not forget to include adjustments for graphite stem packing.

DOUBLE ACTING

TORQUE CHARACTERISTICS

Based on the available air supply, select an actuator with torque outputs that exceed the in-service torque by at least 10%.

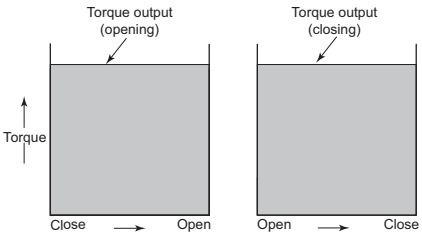

SPRING RETURN

TORQUE CHARACTERISTICS

Based on the available air supply, select an actuator where both the spring-ending torque and air-ending torque amount exceeds the in-service torque by at least 10%.

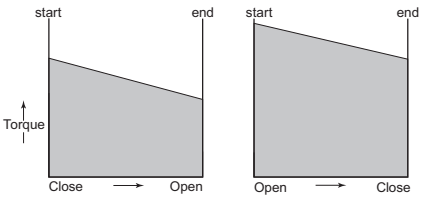

SPRING (CARTRIDGE) PLACEMENT

SIZES 0025 THRU 0600

Apollo spring return actuators are supplied with springs on each end of the actuator. Throughout the size range, there are different spring designs:

- Size 0012 has only 1 spring per side
- Sizes 0025 thru 0600 have a maximum of 6 springs per side
- Sizes 0950 thru 4000 have a maximum of 3 springs per side

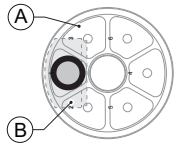

N = 10

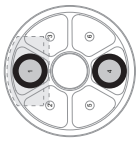

N = 20

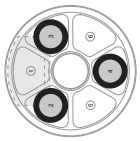

N = 30

N = 40

N = 50

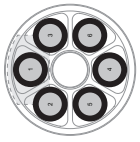

N = 60

A = Piston Top View
B = Position of Piston Gear Rack

SPRING (CARTRIDGE) PLACEMENT

SIZES 0950 THRU 4000

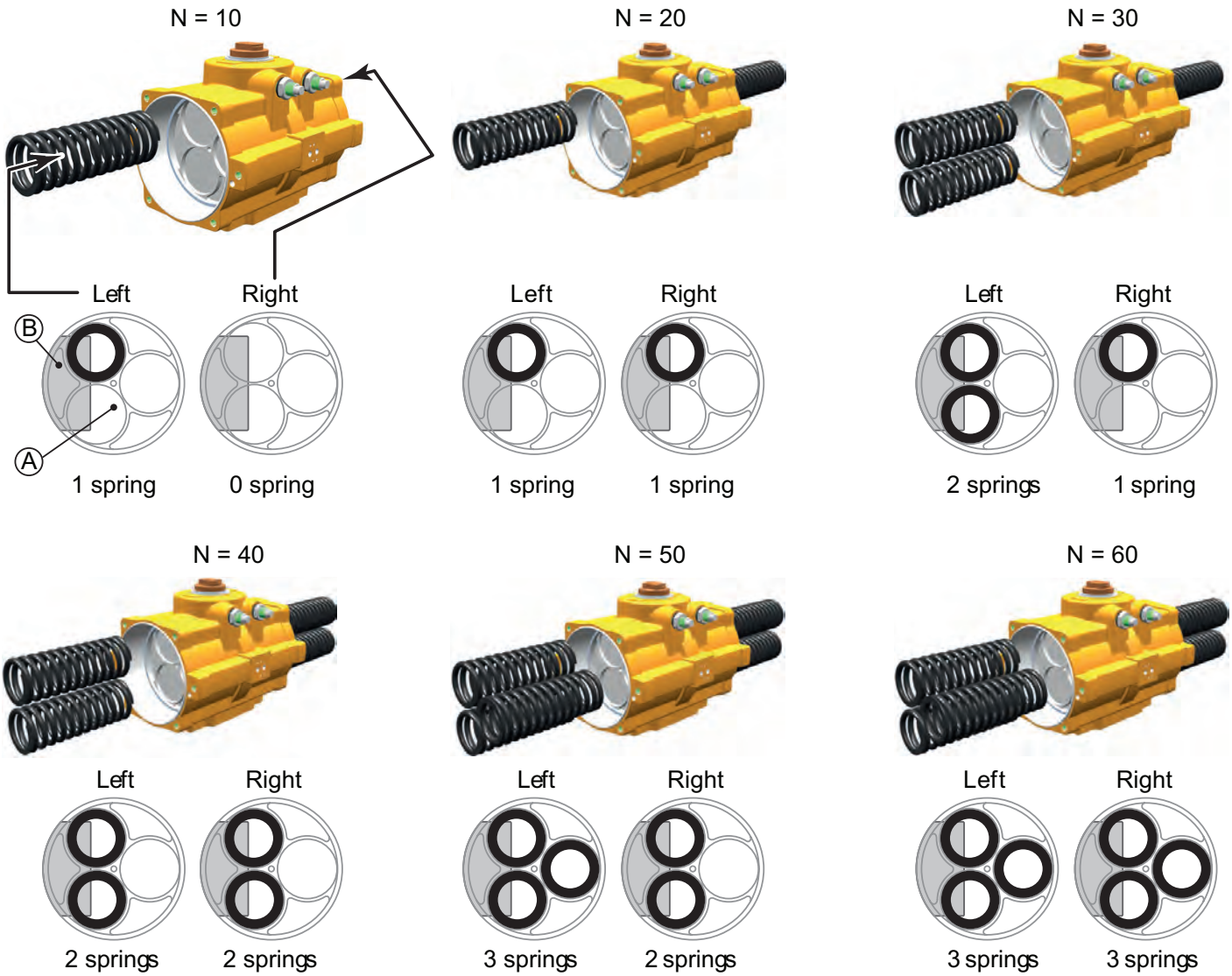

A = Piston Top View
B = Position of Piston Gear Rack

DATA SHEET

0012 (ISO 5211)

DIMENSIONS

SOLENOID, TOP MOUNTING INTERFACES, VALVE INTERFACE, AND DRIVE DETAILS

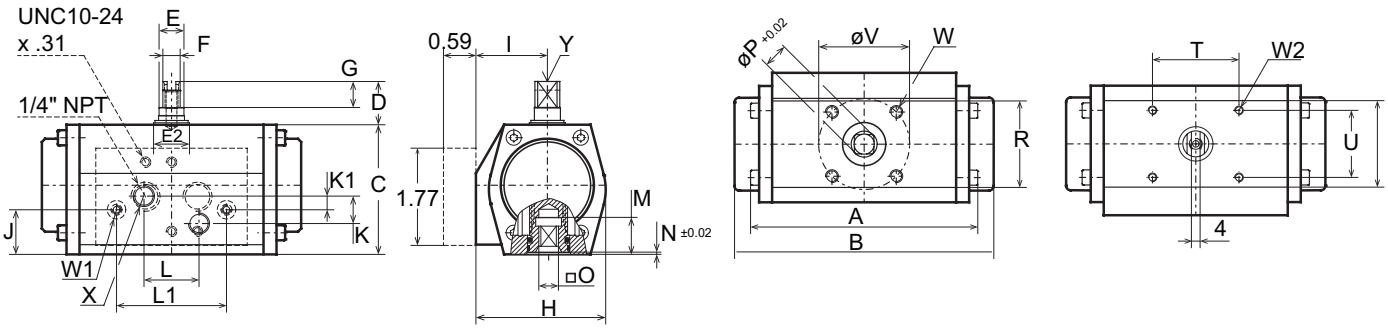

DIMENSIONS

DIMENSIONS (IN.)									
A (AD)	**A (AS)**	**C**	**D**	**E**	**E2**	**F**	**G**	**H**	**I**
4.06	4.65	2.36	0.79	0.63	0.91	0.39	0.47	2.36	1.3
J	**K**	**K1**	**L**	**L1**	**M**	**N**	**O MAX.**	**O MIN.**	**P**
0.83	0.5	0.25	1	2	0.65	0.039	0.36	0.356	0.476
R	**R1**	**T**	**U**	**V**	**W**	**W1**	**W2**	**X**	**Y**
1.57	1.57	1.57	1.22	1.654	M6 x 0.48"	10-24 x 0.24"	10-24 x 0.24"	10-24 x 0.24"	M6 x 0.48"

GENERAL DATA

0012

BORE		1.811	inch
STROKE		0.496	inch
WEIGHT	Spring return	1.3	lb.
	Double-acting	1.5	lb.
VOLUME	Port A	3.1	cu.in.
	Port B	3.7	cu.in.
AIR CONNECTION		2 x ¼"	NPT
PRESSURE RANGE	Max. Operating	120	psig
	Spring return	43-120	psig
	Double-acting	3-120	psig
PRESSURE MEDIA	Clean, dry, or lubricated air or inert gas		
CYCLE SPEED SPRING RETURN	Open	0.4	sec.
	Close	0.4	sec.
CYCLE SPEED DOUBLE-ACTING	Open	0.4	sec.
	Close	0.4	sec.
STANDARD TEMPERATURE RANGE		-4 to 176	°F
LUBRICATION	Lubricated for life[1]		
STROKE	90°		
FINISH	Polyurethane powder coat		

[1] According to EN 15714-3.

Test Conditions:

1. *Solenoid with flow capacity of 0.6 m³/hr.*
2. *Pipe diameter: 6 mm*
3. *Medium: clean air*
4. *Supply pressure: 5.5 barg (80 psig)*
5. *Temperature: Room temperature*

Notes:

- Volume is the actuator free air volume at 1 atm
- Flange and square drive to ISO 5211

European Directives:

- PED: Suitable for use with group 2 gases according to Pressure Equipment Directive (PED) 2014/68/EU
- ATEX: Suitable for use in hazardous areas classified II 2 GD, zones 1 or 2 (gases) and 21 and 22 (dust) according to ATEX Directive 2014/34/EU

ENVELOPE DIMENSIONS

SOLENOID AND TOP MOUNTING INTERFACE, SIZES 0025 – 0350

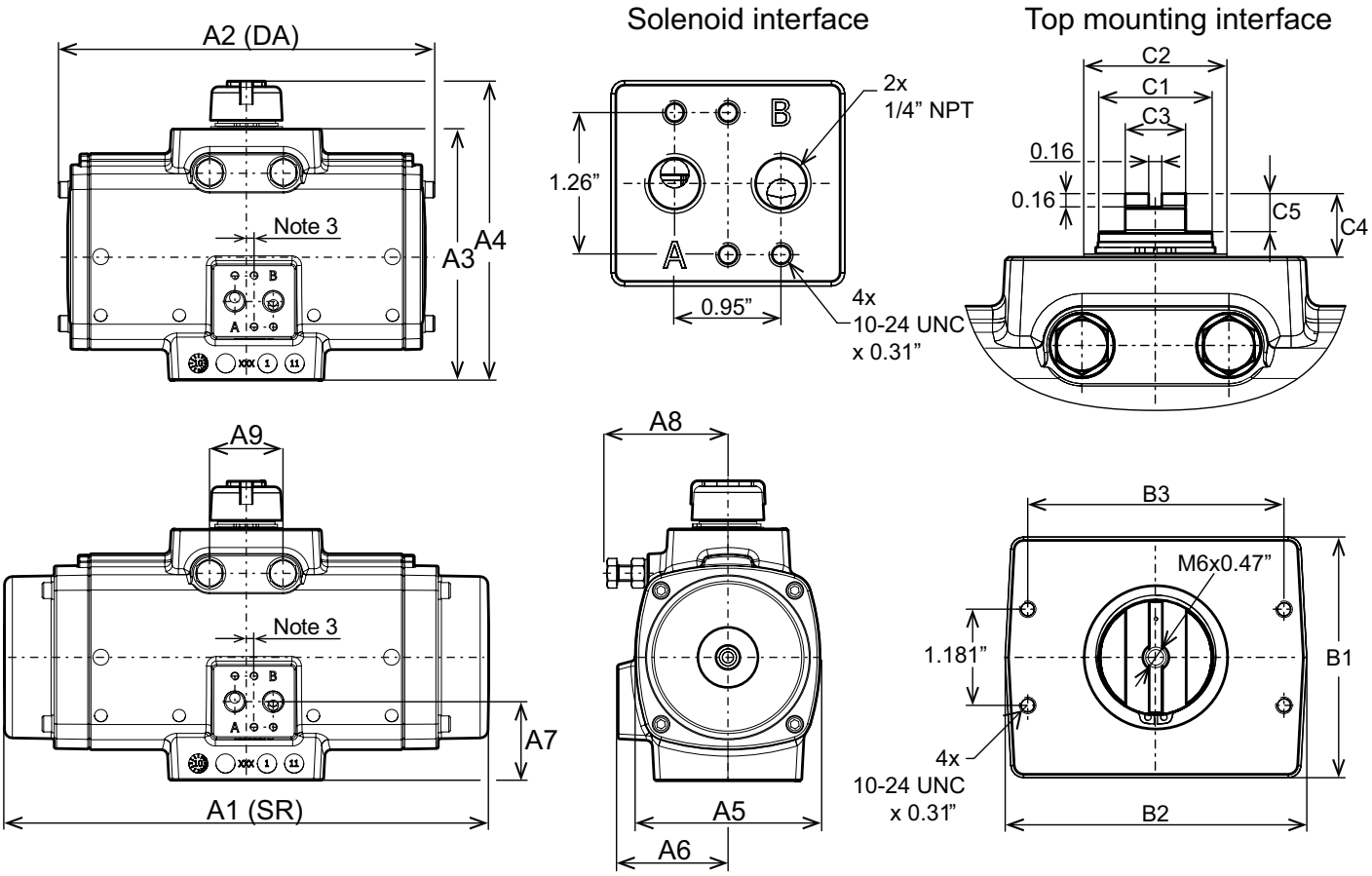

DIMENSIONS

DIMENSIONS (IN.)	ACTUATOR SIZE						
	25	40	65	100	150	200	350
A1	6.54	7.55	8.53	9.72	11.97	14.23	15.15
A2	6.54	7.55	8.53	9.72	9.25	10.43	11.18
A3	3.59	4.39	4.86	5.14	6.19	6.42	7.92
A4	4.69	5.47	5.94	6.22	7.28	7.52	9.06
A5	2.68	3.23	3.62	4.06	4.57	4.88	6.34
A6	1.91	2.15	2.28	2.5	2.72	2.83	3.35
A7	1.16	1.34	1.48	1.5	1.93	1.92	1.65
A8	1.89	2.28	2.72	2.72	2.95	3.43	4.29
A9	0.71	0.98	1.06	1.1	1.81	1.81	1.81
B1	1.69	1.77	1.97	2.36	2.95	2.95	3.35
B2	3.7	3.7	3.7	3.82	3.7	3.7	3.94
B3	3.15	3.15	3.15	3.15	3.15	3.15	3.15
C1	0.63	0.87	0.87	0.87	1.34	1.42	1.42
C2	0.91	1.18	1.18	1.38	1.77	1.77	1.77
C3	0.55	0.55	0.55	0.55	0.75	0.75	0.75
C4	0.79	0.79	0.79	0.79	0.79	0.79	0.79
C5	0.47	0.47	0.47	0.47	0.47	0.47	0.47

Notes:

1. *DA= Double acting, SR= Spring return*
2. *Solenoid interface and top mounting interface according to VDI/VDE 3845 (NAMUR).*
3. *The solenoid drilling pattern is shifted 0.16" for sizes 0025 and 0.08" for the size 0040 vs. the centerline of the actuator.*
4. *Imperial threads are UNC for fastener thread holes and NPT for air connection ports.*

DATA SHEET

SIZE 0600 – 4000 (ISO 5211)

ENVELOPE DIMENSIONS

ENVELOPE DIMENSIONS: SOLENOID AND TOP MOUNTING INTERFACE, SIZES 0600 – 4000

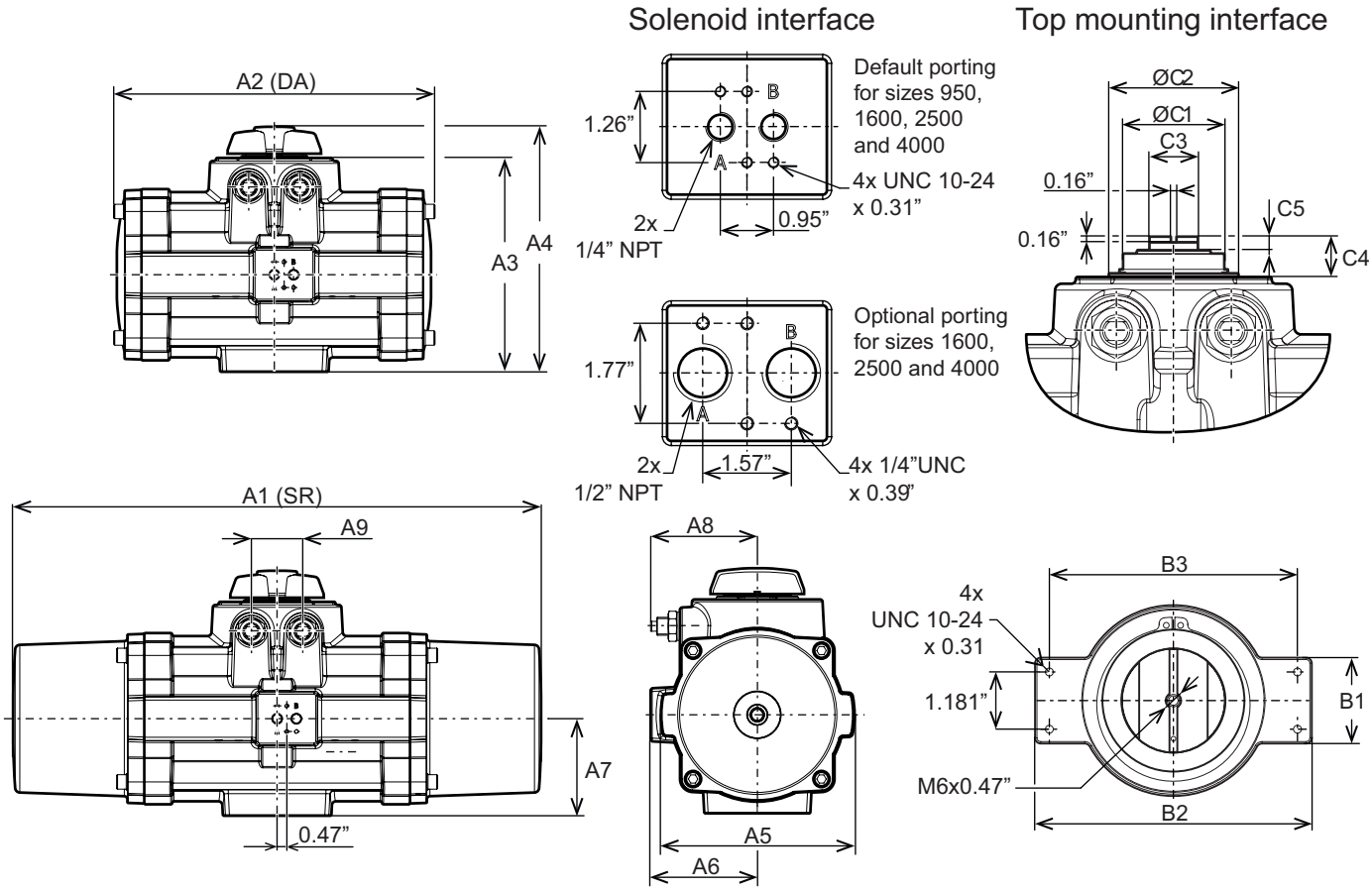

DIMENSIONS

DIMENSIONS (IN.)	ACTUATOR SIZE				
	600	950	1600	2500	4000
A1	18.73	25.91	28.82	34.53	37.76
A2	14.02	15.75	18.19	21.65	25.55
A3	9.77	10.55	11.89	13.94	15.31
A4	11.5	12.01	13.35	15.43	16.81
A5	7.68	9.41	12.05	13.78	15.75
A6	4.02	5.16	5.87	6.69	7.72
A7	2.64	4.76	5.39	6.18	7.24
A8	5.2	5.16	6.14	7.13	6.89
A9	2.36	2.52	3.35	4.02	7.24
B1	3.86	1.77	1.77	1.77	1.77
B2	5.83	5.71	5.71	5.71	5.71
B3	5.12	5.12	5.12	5.12	5.12
C1	2.17	2.56	2.95	3.74	3.78
C2	2.56	3.27	3.78	4.65	4.53
C3	1.42	1.42	1.42	1.42	1.42
C4	1.18	1.18	1.18	1.18	1.18
C5	0.39	0.39	0.39	0.39	0.39

Notes:
1. *DA=Double-Acting, SR=Spring return*
2. *Solenoid interface and top mounting interface according to VDI/VDE 3845 (NAMUR).*
3. *The solenoid drilling pattern is shifted 0.95" for sizes 0950 4000 versus the centerline of the actuator.*
4. *Imperial threads are UNC for fastener thread holes and NPT for air connection ports.*

DATA SHEET

SIZE 0600 – 4000 (ISO 5211)

VALVE FLANGE AND DRIVE DETAILS

DIMENSIONS: SIZES 0025 – 4000

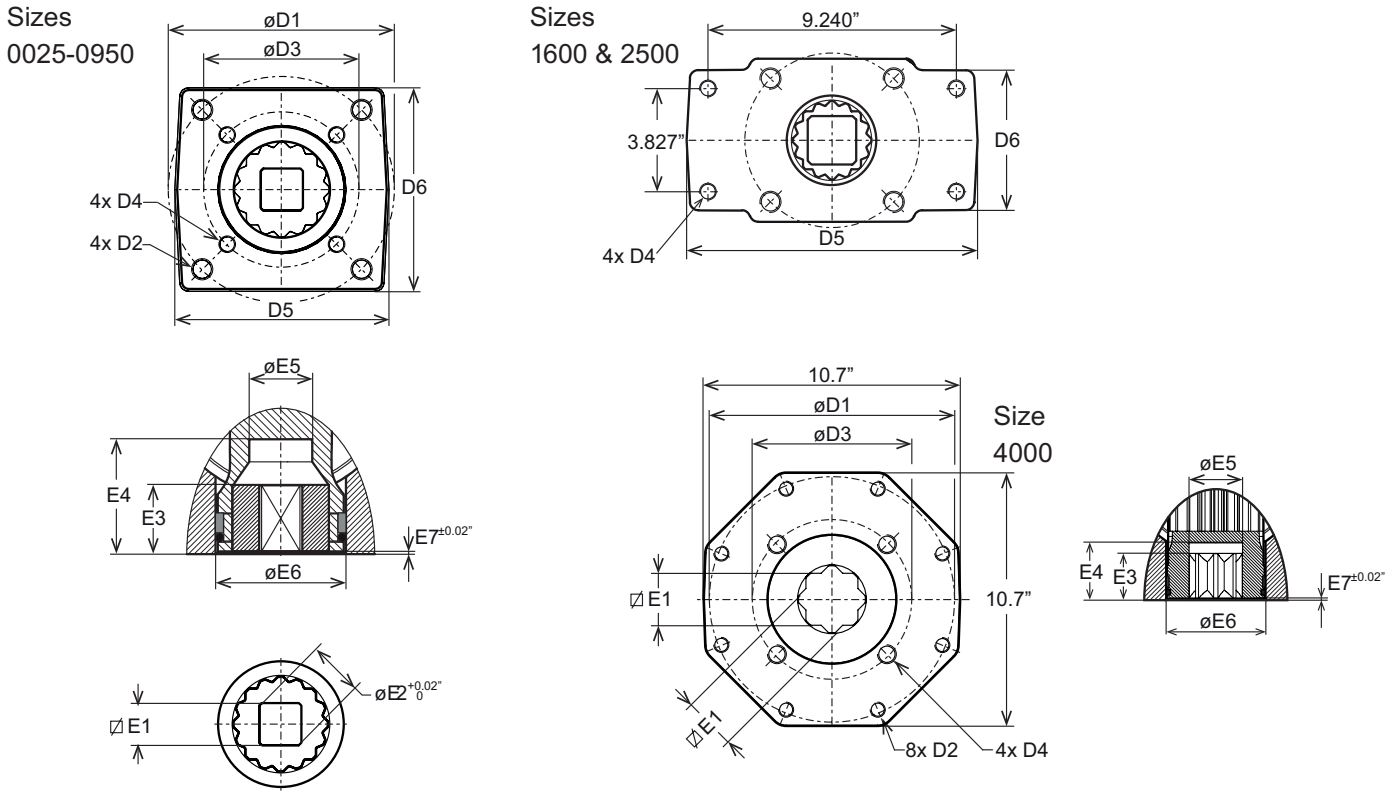

DIMENSIONS

DIMENSIONS (IN.)	ACTUATOR SIZE											
	0025	0040	0065	0100	0150	0200	0350	0600	0950	1600	2500	4000
ISO 1	F05	F07	F07	F7	F10	F10	F10	F12	F14	F16	F16	F25
D1	1.969	2.756	2.756	2.756	4.016	4.016	4.016	4.921	5.512	6.496	6.496	10
D2	1/4"-20 x 0.35	5/16"-18 x 0.47	5/16"-18 x 0.47	5/16"-18 x 0.47	3/8"-16 x 0.59	3/8"-16 x 0.59	3/8"-16 x 0.59	1/2"-13 x 0.71	5/8"-11 x 0.94	3/4"-10 x 1.18	3/4"-10 x 1.18	5/8"-11 x 0.94
ISO 2	F03	F05	F05	F05	F07	F07	F07	F10	F10	F25*	F25*	F16
D3	1.417	1.969	1.969	1.969	2.756	2.756	2.756	4.016	4.016	--	--	6.496
D4	10-24 x 0.31	1/4"-20 x 0.35	1/4"-20 x 0.35	1/4"-20 x 0.35	5/16"-18 x 0.47	5/16"-18 x 0.47	5/16"-18 x 0.47	3/8"-16 x 0.59	3/8"-16 x 0.59	5/8"-11 x 0.94	5/8"-11 x 0.94	3/4"-1 x 1.18
D5	1.97	2.68	2.68	2.62	3.82	3.7	3.7	4.65	5.31	11.02	11.02	10.75
D6	1.89	2.56	2.56	2.48	3.62	3.54	3.7	4.45	5.12	5.2	5.2	10.59
E1 Max.	0.436	0.554	0.554	0.751	0.751	0.87	1.067	1.067	1.424	1.817	1.817	2.176
E1 Min.	0.433	0.551	0.551	0.748	0.748	0.866	1.063	1.063	1.417	1.811	1.811	2.165
E2	0.555	0.713	0.713	0.992	1.004	1.11	1.425	1.425	2.291	2.37	2.37	2.843
E3	0.591	0.591	0.591	0.709	1.083	1.083	1.083	1.083	1.909	2.343	2.343	2.421
E4	1.34	1.34	1.34	1.34	1.97	1.97	1.97	1.97	2.58	3.21	3.21	3.02
E5	0.56	0.71	0.83	0.93	1.12	1.26	1.26	1.44	1.89	2.36	2.36	2.87
E6	0.96	1.36	1.36	1.5	2.22	2.22	2.22	2.66	3.39	4.09	4.92	5.24
E7	0.02	0.04	0.04	0.04	0.05	0.05	0.05	0.05	0.04	0.04	0.04	0.04

Notes:

1. *Flange and square drive according to ISO 5211.*
2. *F25* =F or sizes 1600 and 2500 drilling pattern 9.240" x 3.827" represent 4 holes of a F25 drilling pattern.*
3. *Size 4000 has 2x inner square E1 in the pinion bottom instead of inserts.*
4. *Imperial threads are UNC for fastener thread holes and NPT for air connection ports.*

aalberts integrated piping systems

DRIVE INSERTS

KEY FEATURES

- Drive inserts allow actuators to be directly mounted to valves.
  Eliminates the need for a bracket and coupling type mounting kit.
  The use of drive inserts significantly cuts the cost of the valve/actuator assembly.
- Standard actuators are fitted with square drive inserts.
- Special inserts may have oversized/undersized squares or double-D configurations.

DESCRIPTION

- Standard actuators are fitted with square drives inserts in accordance with ISO 5211. The ISO 5211 standard covers parallel and diagonal oriented inner squares (as per the old DIN 3337 standard).
- Additionally, a wide variety of other inserts are also available. Special inserts may have oversized/undersized squares or double-D configurations.
- Drive inserts can be supplied on factory supplied actuators or as loose items and are easily replaceable.
- Material: aluminum alloy

Notes:
Actuator size 0012 does not have inserts. This square drive is machined directly in the bottom of the pinion.
Actuator size 4000 does not have inserts. This actuator size ha *om of the pinion.*

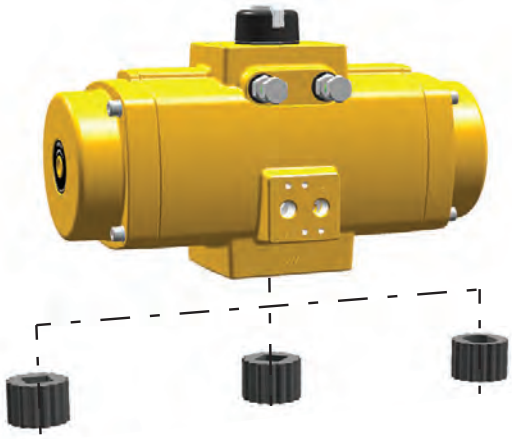

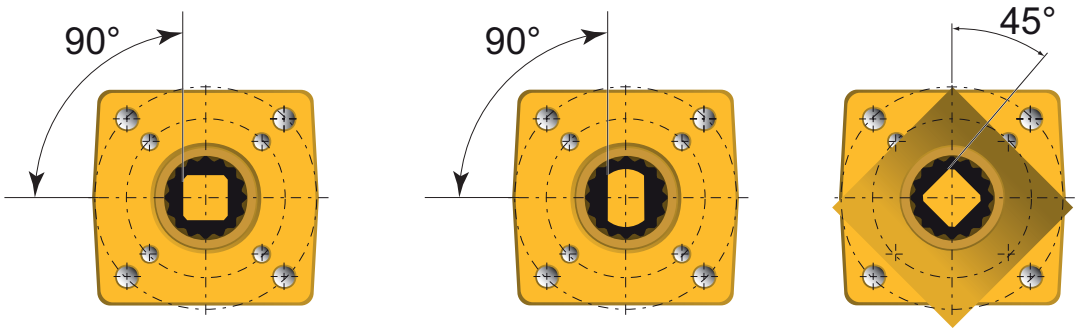

HIGH-TEMPERATURE SERVICE

DESCRIPTION

This version uses the standard aluminum actuator, but incorporates high-temperature grease, O-rings, and bearing materials; all suitable for high temperature operation up to 250°F (120°C).

SPECIFICATION

- Max. Pressure: 120 psig (8.3 barg)
- Torque Output: Standard
- Media: Air or non-corrosive gas
- Temperature: 14°F to 250°F (-10°C to 120°C)
- Finish: Polyurethane powder coating

SPARE PARTS/KITS

Dedicated high temperature spare parts kits are available for maintenance or to convert a standard actuator into a version suitable for high temperature service.

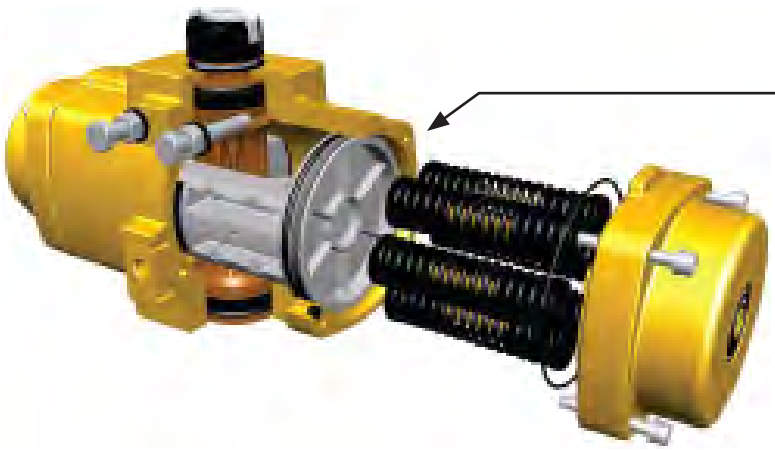

HIGH-TEMPERATURE COMPONENTS:
- Castrol High Performance Grease
- Viton (FPM) o-ring seals
- PTFE 24% carbon filled piston bearings
- Nylon 66 resin containing Aramid Fibre & PTFE for bearing strip piston rack and pinion bearings

STANDARD PARTS LIST

DESCRIPTION	MATERIAL
Housing	Cast Aluminum Alloy
End Cap	Cast Aluminum Alloy
Piston	Cast Aluminum Alloy
Pinion	High Grade Aluminum
Spring Cartridge	Spring Steel
Bearing Strip Piston Rack	Nylon-66 Resin containing Aramid Fiber & PTFE
Bearing Piston	PTFE 25% Carbon Filled
Bearing Pinion	Nylon-66 Resin containing Aramid Fiber & PTFE
Thrust Washer	POM, Black UV Stabilized
End Cap Screw	Stainless Steel
Circlip	Spring Steel
O-ring Seal Pinion	Viton FPM
O-ring Seal Piston	Viton FPM
O-ring Seal End cap	Viton FPM
O-ring Seal Limit Stop	Viton FPM
B-Port Seal	Silicon Rubber
Limit Stop Screw	Stainless Steel
Limit Stop Nut	Stainless Steel
Limit Stop Washer	PA66
Warning Sticker	Polyester
Indicator Assembly	ABS + Stainless Steel Screw
Insert Drive	Aluminum Alloy
Grease	Castrol High Temperature Grease (or Equiv.)

LOW-TEMPERATURE SERVICE

DESCRIPTION
This version uses the standard aluminum actuator, but incorporates low temperature grease and O-ring seal materials; all suitable for low temperature operation down to -40°F (-40°C).

SPECIFICATION
- Max. Pressure: 120 psig (8.3 barg)
- Torque Output: Standard
- Media: Air or non-corrosive gas
- Temperature: -40°F to 176°F (-40°C to 80°C)
- Finish: Polyurethane Powder Coating
- Cycle Life: Replace seals after 250,000 cycles

SPARE PARTS/KITS
Dedicated low temperature spare parts kits are available for maintenance or to convert a standard actuator into a version suitable for low temperature service.

Notes:
When operating actuators in sub-zero temperature (<32°F or <0°C) care should be taken to counter the effects of freezing condensate inside the actuator.

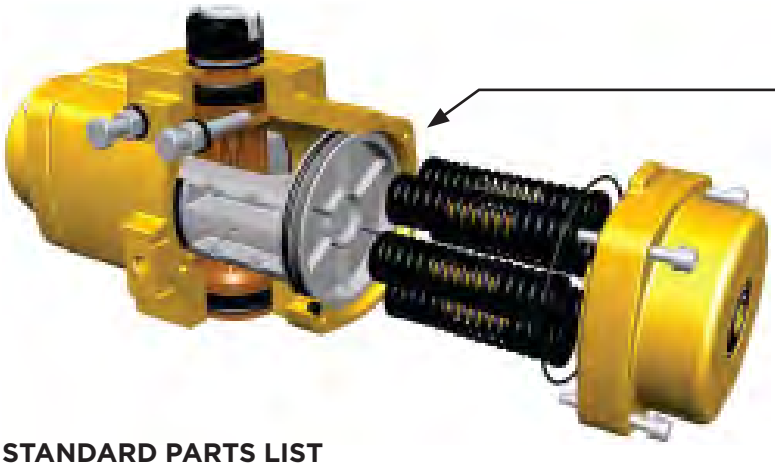

LOW-TEMPERATURE COMPONENTS:
- Castrol Tribol GR TT 1 PD grease
- Silicone (MVQ70 rubber) o-ring seals

STANDARD PARTS LIST

DESCRIPTION	MATERIAL
Housing	Cast Aluminum Alloy
End Cap	Cast Aluminum Alloy
Piston	Cast Aluminum Alloy
Pinion	High Grade Aluminum
Spring Cartridge	Spring steel
Bearing Strip Piston Rack	POM
Bearing Piston	PTFE 25% Carbon Filled
Bearing Pinion	POM
Thrust Washer	POM, Black UV Stabilized
End Cap Screw	Stainless steel
Circlip	Spring steel
O-ring Seal Pinion	Silicon MVQ70
O-ring Seal Piston	Silicon MVQ70
O-ring Seal End cap	Silicon MVQ70
O-ring Seal Limit Stop	Silicon MVQ70
B-Port Seal	Silicon Rubber
Limit Stop Screw	Stainless steel
Limit Stop Nut	Stainless steel
Limit Stop Washer	PA66
Warning Sticker	Polyester
Indicator Assembly	ABS + Stainless steel screw
Insert Drive	Aluminum Alloy
Grease	Castrol Tribol GR TT 1 PD grease (or Equiv.)

ACUTORQUE STAINLESS STEEL ACTUATORS

DESIGN & CONSTRUCTION

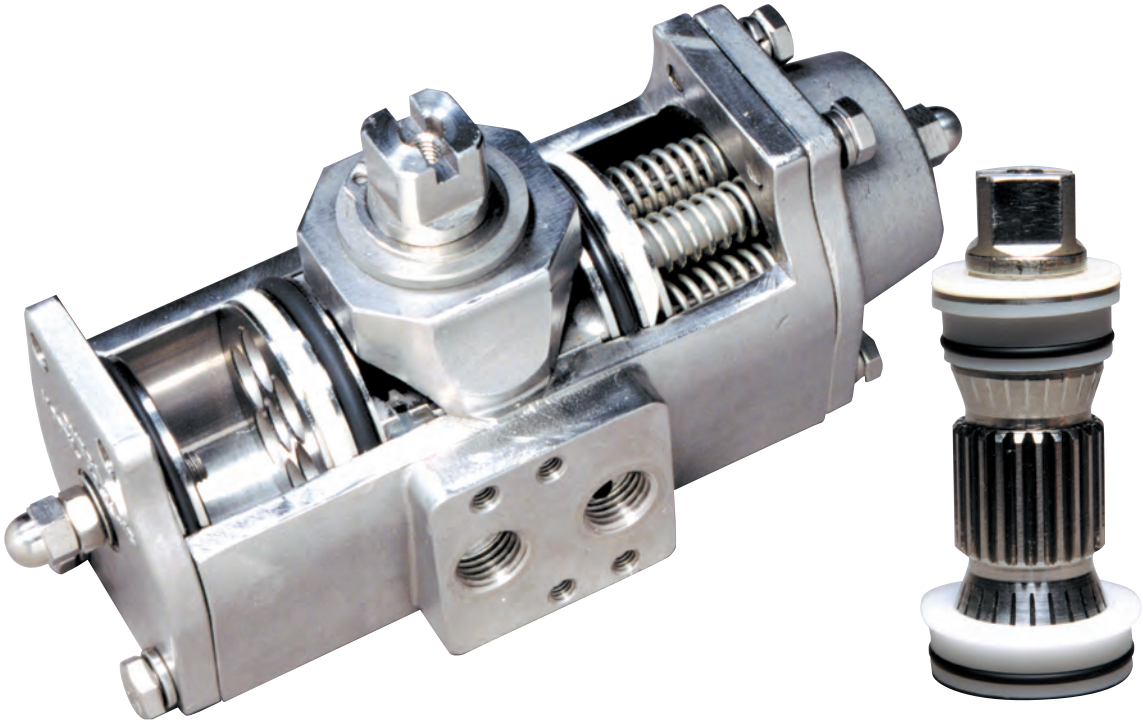

INVESTMENT CAST BODY
- Assures manufacturing of other special alloys, such as Monel

UNIQUE DRIVE PINION
- One piece stainless steel alloy shaft, precision machined gear and teeth for precise control

BEARINGS
- Replaceable top and bottom TFE Pinion Bearings to ensure low friction, stability above 400°F, and chemical resistance

TRAVEL STOPS
- Provides +/-4° travel adjustment in outboard direction

ACCESSORY MOUNTING
- Manufactured to NAMUR to provide international standardized mounting

STAINLESS STEEL PISTONS
- Precision cast pistons are guided through full face engagement with the pinion and piston guide

NAMUR SLOTTED SHAFT
- Standard to provide a self-centering positive drive for positioners, a variety of switches

ACTUATOR MOUNTING
- Manufactured in accordance with ISO 5211 to ensure mounting the actuator directly on valves

PRE-LOADED CARTRIDGES
- Converts a standard double acting actuator to a spring return unit by simply removing the end caps and adding the spring cartridges

NAMUR SOLENOID MOUNTING
- International standard for direct mounting of solenoid valves

ACUTORQUE STAINLESS STEEL ACTUATORS

OPERATION

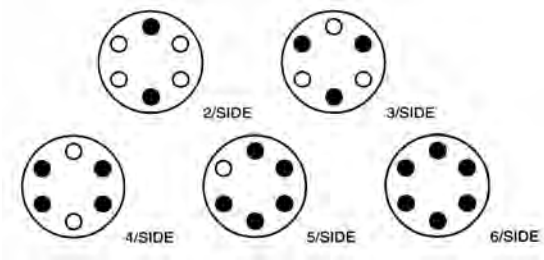

The Apollo Acutorque actuator is manufactured with an integral and internal air manifold. The solenoid mounting pad is manufactured to Namur dimensional standards as to allow for the direct mounting of various manufacturers' solenoid valves and other flow control devices. For applications not requiring a direct mount solenoid valve, ports are tapped to NPT standards (American National Standard taper threads).

REVERSE ROTATION

When required, a clockwise rotation of the drive pinion, by means of air to PORT A can be achieved by reversing the pistons inside the actuator body (rotate 180 degrees).

SPRING CONFIGURATION

Each Acutorque actuator comes with a complete spring pack (6 springs per side with nylon retainers) unless otherwise specified. When less than the full spring pack is desired for various torque outputs (see torque chart); springs can be removed from the actuator end caps. It is very important that springs can be arranged in a symmetrical manner (positioned as shown) so that unwarranted side-load does not occur between the pistons and actuator body. CAUTION: Refer to operation and maintenance instructions before disassembly and removal of springs.

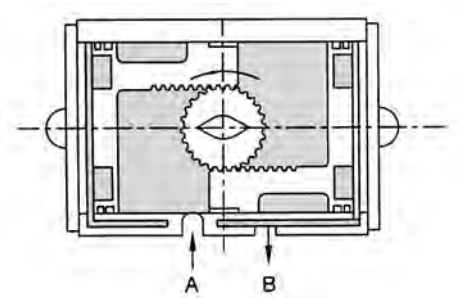

Air to PORT A: Pressure applied enters center of chamber forcing the pistons outward and rotating the drive pinion in a counter-clockwise direction and forcing exhaust air out of PORT B.

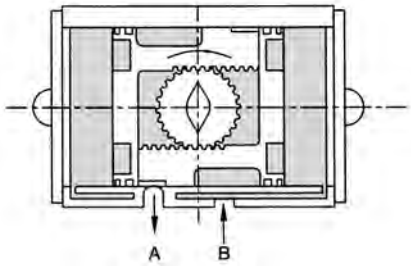

Air to PORT B: Air pressure enters the outer chambers forcing the pistons inward and rotating the drive pinion in a clockwise direction while forcing exhaust air out of PORT A.

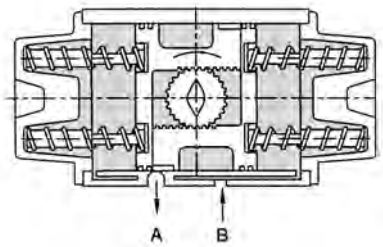

Loss of air pressure in the center chamber allows energy in the compressed springs to force the pistons inward, resulting in a clockwise rotation of the drive pinion while exhaust air leaves via PORT A.

ACUTORQUE STAINLESS STEEL ACTUATORS

FEATURES

CORROSION RESISTANCE

All metal components are cast or machined from Stainless Steel or Monel, which offers excellent resistance to most corrosive chemicals as well as industrial atmospheres.

NO LUBRICATION

All actuators are factory lubricated for the optimum life of the actuator under normal conditions. Teflon® piston bearings are used because of their self-lubricating properties.

SIMPLE MAINTENANCE

Each actuator is designed for ease of maintenance. Should you wish to change a spring rating or completely rebuild a unit, total disassembly and reassembly is easily performed in just minutes with standard shop tools.

ISO/NAMUR MOUNTING

By using ISO/Namur standards, our actuators lend themselves to a host of various manufacturers' direct mount accessories. Solenoid valves, limit switches, positioners, etc. bolt directly to the actuator and in turn reduces the cost of assembly and installation of automated packages. Flexibility for future system modifications is greatly enhanced.

QUALITY

Each part of the actuator must pass a stringent quality test before it can be incorporated into an assembly. All materials used in construction must be certified and tested to prove their proper composition. Every cast part must pass an X-ray test before proceeding to the machining process. After machining, every part is dimensionally evaluated to assure it meets acceptable tolerance.

SAFETY

All actuator bodies and end caps are investment cast stainless steel, rugged and built to last. It may be argued that the mechanical properties of stainless steel permit the ability to use this wall tubing in the construction of an actuator. However, that is not the case with our actuator. Thick wall castings mean protection for actuator internal porting and components as well as maintenance and operating personnel. Our unique drive pinion design ensures blowout proof protection. Spring retainers are incorporated to allow safe removal of end caps during spring torque rating change or rebuild process.

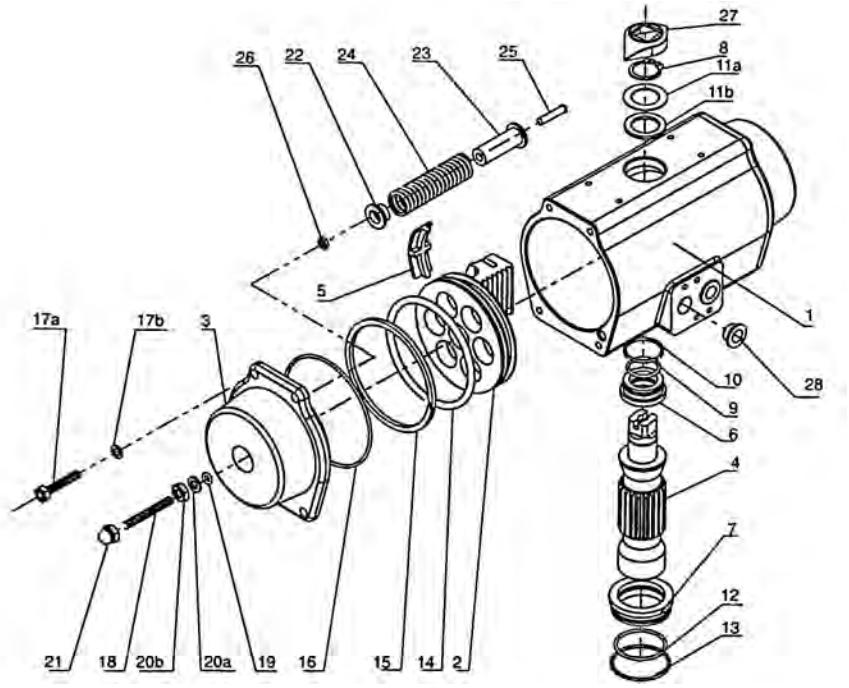

	PART	QTY	MATERIAL
1	Body	1	304 Stainless Steel
2	Piston	2	303 Stainless Steel
3	End Caps-Double Acting	2	Stainless Steel
4	Drive Pinion	1	17-4 Stainless Steel
5	Guide Bearing Plate	2	Nylon 6
6	Pinion Bearing Top	1	Teflon
7	Pinion Bearing Bottom	1	Teflon
8	Snap Ring	1	Stainless Steel
9	O-Ring-Inner Top	1	Viton
10	O-Ring-Outer Top	1	Viton
11a	Washer	1	Stainless Steel
11b	Bearing	1	Nylon 6
12	O-Ring-Inner Bottom	1	Viton
13	O-Ringer-Outer Bottom	1	Viton
14	O-Ring-Piston	2	Viton
15	Bearing-Piston	2	Nylon 6

	PART	QTY	MATERIAL
16	O-Ring-End Cap	2	Nitrile
17a	Bolts-End Cap	8	18-8 Stainless Steel
17b	Spring Bearing	8	Stainless Steel
18	Adjusting Travel Stop	2	Stainless Steel
19	O-Ring-Travel Stop	2	Nitrile
20a	Washer	2	Stainless Steel
20b	Nut-Travel Stop	2	Stainless Steel
21	End Nut-Travel	2	Stainless Steel
22	Spring Retainer (S)	*	Nylon 6
23	Spring Retainer (L)	*	Nylon 6
24	Spring	*	Plated CS
25	Spring Screw	*	Stainless Steel
26	Spring Nut	*	Stainless Steel
27	Positioner Indicator	1	Nylon
28	Plug	2	Nylon 6

ACUTORQUE STAINLESS STEEL ACTUATORS

DIMENSIONAL DATA

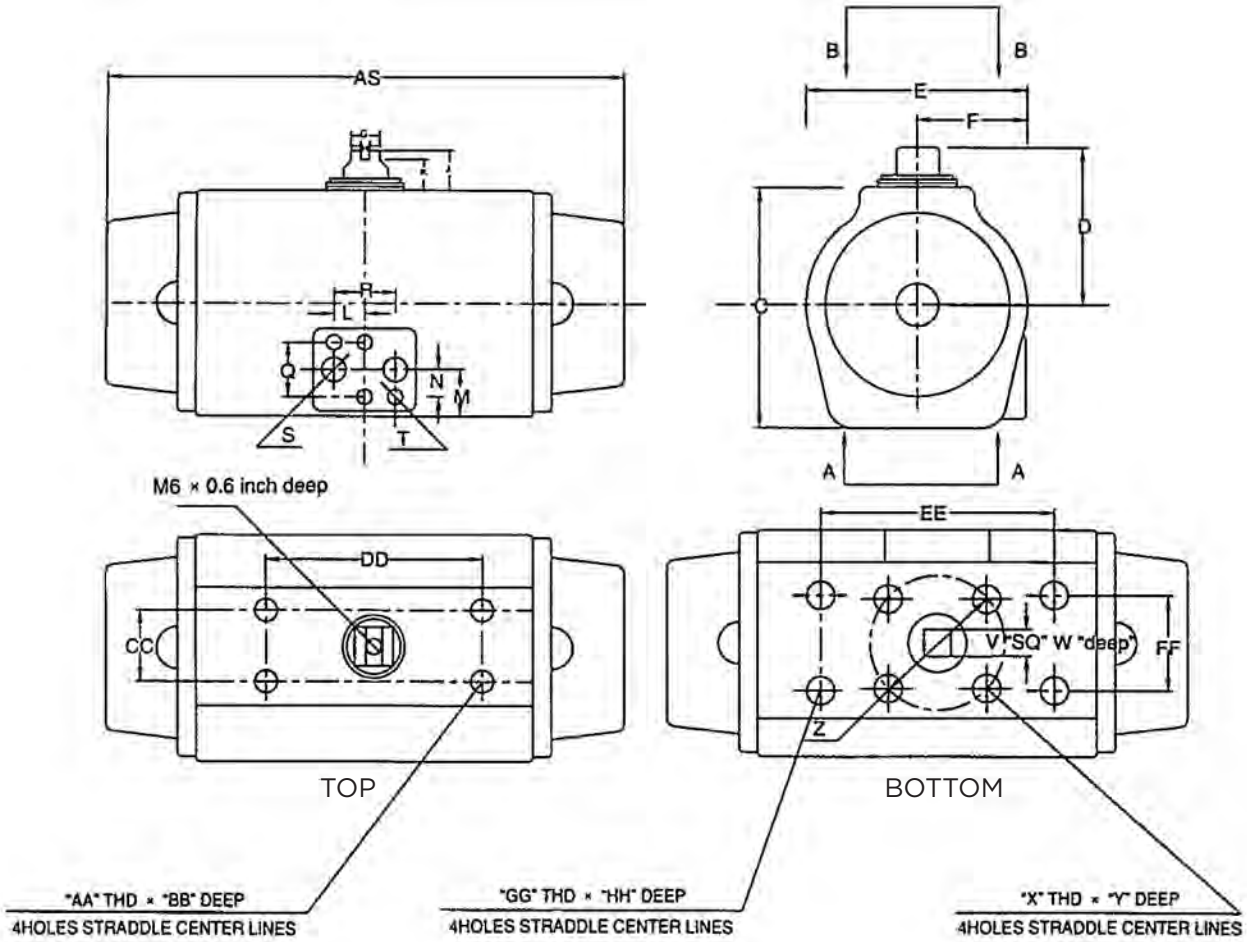

MOUNTING DIMENSIONS

MODEL		R	S	T	V	W	X	Y	Z	AA	BB	CC	DD	EE	FF	GG	HH
3SD04500	mm	24	1/4"NPT	M5	11	15	M5	8	42	M5	6	30	80	88.9	31.75	M5	8
3SS04560	in	0.95	1/4"NPT	M5	0.4	0.59	M5	0.31	1.65	M5	0.24	1.18	3.15	3.5	1.25	M5	0.31
3SD06000	mm	24	1/4"NPT	M5	14	15	M6	8	50	M5	6	30	80	88.9	31.75	M6	8
3SS06060	in	0.95	1/4"NPT	M5	0.55	0.59	M6	0.31	1.97	M5	0.24	1.18	3.15	3.5	1.25	M6	0.31
3SD08500	mm	24	1/4"NPT	M5	19	17	M8	12	70	M5	6	30	80	114	38	M8	12
3SS08560	in	0.95	1/4"NPT	M5	0.75	0.68	M8	0.47	2.75	M5	0.24	1.18	3.15	4.5	1.5	M8	0.47
3SD10500	mm	24	1/4"NPT	M5	19	20	M8	12	70	M5	6	30	80	114	38	M8	12
3SS10560	in	0.95	1/4"NPT	M5	0.75	0.79	M8	0.47	2.75	M5	0.24	1.18	3.15	4.5	1.5	M8	0.47
3SD12500	mm	24	1/4"NPT	M5	22	30	M8	18	102	M5	8	30	130	NA	50.8	NA	NA
3SS12560	in	0.95	1/4"NPT	M5	0.87	1.2	M8	0.71	4.02	M5	0.31	1.18	5.12		2		
3SD14000	mm	24	1/4"NPT	M5	22	27	M10	18	102	M5	8	30	130	NA	50.8	NA	NA
3SS14060	in	0.95	1/4"NPT	M5	0.87	1.06	M10	0.71	4.02	M5	0.31	1.18	5.12		2		
3SD17000	mm	24	1/4"NPT	M5	32	36	M12	24	125	M5	8	30	130	NA	76	NA	NA
3SS17060	in	0.95	1/4"NPT	M5	1.26	1.42	M12	0.95	4.92	M5	0.31	1.18	5.12		3		
3SD21000	mm	24	1/4"NPT	M5	36	43	M20	28	140	M5	8	30	130	NA	76	NA	NA
3SS21060	in	0.95	1/4"NPT	M5	1.42	1.69	M20	1.1	5.51	M5	0.31	1.18	5.12		3		

ACUTORQUE STAINLESS STEEL ACTUATORS

TECHNICAL DATA

ENVELOPE DIMENSIONS

MODEL		AS	C	D	E	F	G	H	J	K	L	N	M	Q
3SD04500	mm	168	65	52.5	62.5	35	16	4	20	10	12	16	23	32
3SS04560	in	6.61	2.56	2.07	2.46	1.38	0.63	0.16	0.79	0.39	0.47	0.63	0.91	1.26
3SD06000	mm	180	81	60.5	74	39	16	4	20	10	12	16	23	32
3SS06060	in	7.09	3.19	2.38	2.91	1.54	0.63	0.16	0.79	0.39	0.47	0.63	0.91	1.26
3SD08500	mm	222	108	74	100.5	52	16	4	20	10	12	16	24	32
3SS08560	in	8.74	4.25	2.91	3.96	2.05	0.63	0.16	0.79	0.39	0.47	0.63	0.95	1.26
3SD10500	mm	290	133	86.5	117	58.5	16	4	20	10	12	16	30	32
3SS10560	in	11.42	5.24	3.41	4.61	2.3	0.63	0.16	0.79	0.39	0.47	0.63	1.18	1.26
3SD12500	mm	390	155	110.2	136	68	20	4	30.5	10.5	12	16	40	32
3SS12560	in	15.5	5.02	3.59	5.65	2.91	0.79	0.16	1.2	0.41	0.47	0.63	1.57	1.26
3SD14000	mm	420	176	116.5	156	79	20	4	30.5	10.5	12	16	40	32
3SS14060	in	16.54	6.93	4.59	6.14	3.11	0.79	0.16	1.2	0.41	0.47	0.63	1.57	1.26
3SD17000	mm	538	210	131.5	193	98	20	4	30.5	10.5	12	16	50	32
3SS17060	in	21.18	8.27	5.18	7.6	3.86	0.79	0.16	1.2	0.41	0.47	0.63	1.97	1.26
3SD21000	mm	698	258	156	236	120	32	4	30.5	10.5	12	16	68	32
3SS21060	in	27.48	10.16	6.14	9.29	4.72	1.26	0.16	1.2	0.41	0.47	0.63	2.68	1.26

ACTUATOR MODEL	VOLUME (IN^2 PER 90° CYCLE)	AIR CONSUMPTION (SCF PER 90° ROTATION)*		WEIGHT (LB)
		CW	CCW	
3SS045X0	45	8.5	6.5	9
3SS060X0	60	17.5	14.8	16
3SS085X0	85	36.5	24.5	23
3SS105X0	105	72	49.3	37
3SS125X0	125	196	147	52
3SS140X0	140	358	278	75
3SS170X0	170	542	382	188
3SS210X0	210	753	470	258

*Notes: *Temperature and atmospheric conditions could change values above.*

ACTUATOR MODEL	TORQUE (IN-LB) VS. AIR SUPPLY PRESSURE (PSI)					
	40	60	80	100	120	150
3SD04500	74	116	152	199	239	289
3SD06000	151	234	328	413	499	600
3SD08500	365	548	732	915	1097	1315
3SD10500	701	1068	1436	1829	2184	2632
3SD12500	1355	2069	2759	3449	4115	5168
3SD14000	2018	3032	4039	5046	6056	6615
3SD17000	2868	4050	5324	6640	7987	10042
3SD21000	5328	8462	11188	13884	16709	20929

ACUTORQUE STAINLESS STEEL ACTUATORS

SPRING RETURN TORQUE

ACTUATOR MODEL	SPRING SET#*	SPRING STROKE		TORQUE (INCH/LB) VS. AIR SUPPLY PRESSURE (PSI)											
				40		60		80		100		120		150	
		0	90	0	90	0	90	0	90	0	90	0	90	0	90
3SS045X0	2	34	21	56	43	98	84	136	121	178	162	220	203	256	230
	3	49	29	45	24	88	65	126	93	165	142	204	179	238	204
	4	71	43			72	42	115	90	154	126	196	163	218	175
	5	88	52					109	76	147	109	182	184	209	156
	6	107	64					97	58	135	91	172	103	190	129
3SS060X0	2	61	37	101	79	167	140	237	214	304	278	369	345	435	399
	3	93	55	84	48	147	107	219	185	284	248	352	315	405	350
	4	124	75			129	77	203	157	268	219	331	276	380	315
	5	156	93			110	45	187	131	250	189	315	250	359	272
	6	186	112					171	102	233	158	296	218	335	228
3SS085X0	2	172	93	275	206	450	369	645	572	821	744	999	919	1175	1065
	3	257	139	236	126	403	281	602	493	773	661	949	884	1105	945
	4	343	185			354	192	558	414	729	574	901	743	1042	825
	5	428	232					516	303	683	490	853	651	975	705
	6	515	288					473	258	636	405	800	564	915	580
3SS105X0	2	325	182	527	394	852	703								
	3	483	256	443	246	759	537	1137	939						
	4	643	358			665	369	1051	790	1374	1099	1703	1413	1975	1570
	5	805	447			556	119	974	641	1291	934	1615	1241	1852	1340
	6	964	537					888	493	1195	777	1519	1077	1705	1100
3SS125X0	2	628	343	1025	730	1724	1435								
	3	945	510	860	425	1545	1118	2310	1864						
	4	1259	687			1370	806	2068	1480	2720	2158	3333	2450	4166	3062
	5	1579	865			1199	483	1875	1160	2545	1835	3157	2185	3947	2728
	6	1895	1040					1690	850	2371	1528	2915	1846	3628	2310
3SS140X0	2	905	520	1478	1092	2469	2088								
	3	1355	780	1215	642	2210	1639	3195	2620						
	4	1808	1035			1956	1197	2935	2180	3960	3175	5000	4000	6250	5010
	5	2257	1301			1692	739	2680	1750	3700	2748	4608	3425	5760	4290
	6	2708	1562					2441	1279	3444	2290	4280	2852	5362	3568
3SS170X0	2	1227	738	1985	1494	3411	2923								
	3	1830	1092	1824	1087	3045	2347	3945	3626						
	4	2417	1446			2695	1713	4012	3035	4307	4291	6305	5221	7890	6526
	5	3044	1811			2329	1104	3647	2417	4934	3700	6000	4608	7495	5760
	6	3653	2166					3295	1817	4579	3093	5719	3750	7149	4680
3SS210X0	2	2425	1388	4080	2988	7149	6112								
	3	3640	2080	3388	1831	6456	4899	9205	7626						
	4	4857	2769			5750	3675	8510	6438	11150	9082	9231	12900	16100	12835
	5	6060	3465			5070	2475	7772	5224	10400	5160	7835	12000	15000	11030
	6	7270	4165					7125	4010	9700	4238	6616	10909	13650	9150

** X in Actuator Model is Spring Set*

SCOTCH-YOKE ACTUATORS

G SERIES

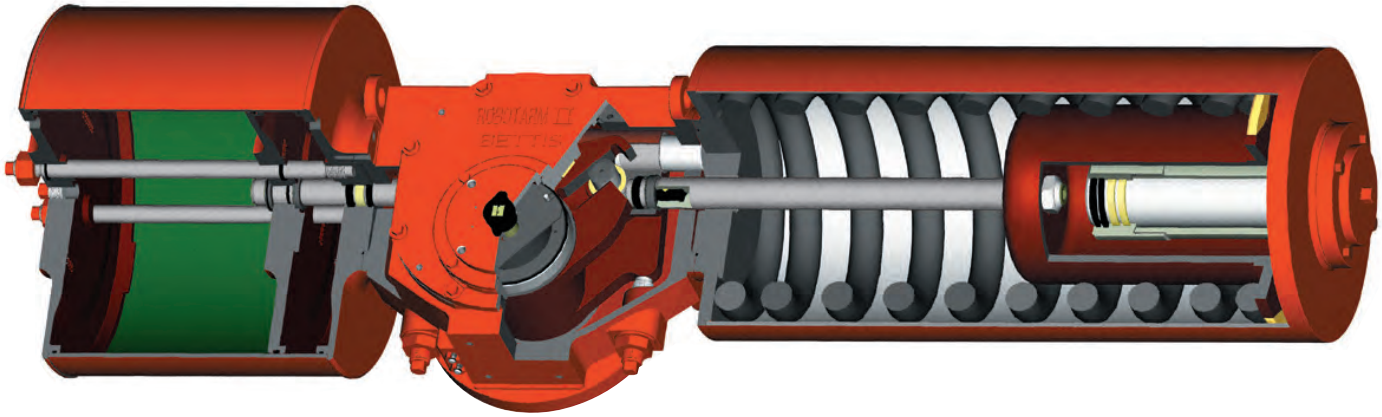

NAMUR

The shaft driven accessory interface conforms to the NAMUR standard and is identical on all G-Series actuators, allowing for standardization of accessory mounting hardware and installation practices

- Pneumatic and hydraulic scotch-yoke actuators
- Automates ball, butterfly, plug valves and any other 90° rotating mechanisms
- Salt Spray Testing per ASTM B117 criteria. Construction features prevent water ingress, allowing G-Series actuators to meet IP 66 and IP 67M specifications and severe high pressure water deluge test.

OPERATING RANGES

G-Series double acting actuators produce guaranteed minimum torque outputs from 10,000 lb-in. up to 6,000,000 lb-in. The spring return units produce spring torques from 2,500 lb-in. to 3,000,000 lb-in.

- Standard operating pressures:
- Pneumatic — to 200 psig (14 BAR)
- Standard operating temperature is -20°F to +200°F (-29°C to +93°C)
- Optional trims available:
  0°F to +350°F (-18°C to +177°C)
  -50°F to +180°F (-46°C to +82°C)
- Mechanical and hydraulic manual overrides are available
- MSS and ISO Valve Mounting
  The G-Series valve interface meets the dimensional requirements of MSS SP-101 or ISO 5211 defined for each torque range

DOUBLE ACTING G1 PNEUMATIC ACTUATOR TORQUE CHART

APOLLO MODEL NO.	REFERENCE NUMBER	STROKE POSITION	OPERATING PRESSURE (PSIG)											
			40	50	60	70	80	90	100	110	120	150	175	200
			OUTPUT TORQUE (IN-LBS)											
3TG100800	G01008	Start/End	12465	14543	16620	18698	20775	22853	24930	31163	36356	41550		
		Minimum			6579	7675	8772	9868	10965	12061	13158	16447	19188	21929
3TG100900	G01009	Start/End	10593	13241	15890	18538	21186	23835	26483	29131	31779	39724		
		Minimum	5591	6989	8386	9784	11182	12579	13977	15375	16772	20966		
3TG101000	G01010	Start/End	14046	17557	21069	24580	28092	31603	35115	38626				
		Minimum	7413	9266	11120	1973	14826	16680	18533	20386				
3TG101200	G01012	Start/End	20133	25166	30199	35232								
		Minimum	10626	13282	15938	18595								
3TG101400	G01014	Start/End	24482	30603	36723									
		Minimum	12921	16152	19382									

aalberts integrated piping systems

SCOTCH-YOKE ACTUATORS

TORQUE RATING - G SERIES

All published torques are guaranteed minimum values.

G SERIES PNEUMATIC DOUBLE-ACTING ACTUATOR TORQUE CHART

APOLLO MODEL NO.	REFERENCE NUMBER	STROKE POSITION	OPERATING PRESSURE (PSIG)											
			40	50	60	70	80	90	100	110	120	150	175	200
			OUTPUT TORQUE (IN-LB)											
3TG200900	G2009	Start/End				22441	25647	28852	32058	35264	38470	48087	56102	
		Minimum			11844	13536	15228	16920	18612	20304	25379	29609		
3TG201000	G2010	Start/End		21254	25504	29755	34006	38257	42507	46758	51009			
		Minimum		11217	13461	15704	17948	20191	22434	24678	26921			
3TG201200	G2012	Start/End	24371	30464	36556	42649	48742	54835	60927					
		Minimum	12862	16078	19294	22509	25725	28941	32156					
3TG201400	G2014	Start/End	29636	37046	44455	51864	59273							
		Minimum	15641	19552	23462	27373	31283							
3TG201600	G2016	Start/End	39118	48897	58677									
		Minimum	20646	25807	30968									
3TG301000	G3010	Start/End				35888	41015	46142	51269	56396	61523	76903	89721	102538
		Minimum				18941	21647	24353	27059	29764	32470	40588	47352	54117
3TG301200	G3012	Start/End		36847	44216	51585	58955	66324	73693	81063	88432			
		Minimum		19447	23336	27226	31115	35004	38894	42783	46672			
3TG301400	G3014	Start/End	35887	44859	53831	62803	71775	80747	89719	98690				
		Minimum	18941	23676	28411	33146	37881	42616	47351	52087				
3TG301600	G3016	Start/End	47430	59288	71145	83003	94860							
		Minimum	25033	31291	37549	43807	50065							
3TG302000	G3020	Start/End	75266	94082										
		Minimum	39724	49654										

SPRING RETURN G1 PNEUMATIC ACTUATOR TORQUE CHART

APOLLO MODEL NO.	REFERENCE NUMBER	SPRING TORQUE (IN-LB) START/MIN/END	OPERATING PRESSURE (PSIG)											
			40	50	60	70	80	90	100	110	120	150	175	200
			OUTPUT TORQUE START/MIN/END (IN-LB)											
3TG100804	G01008-SR4	11614					5551	7628	9706	11783	13861	20093	25287	30481
		5708					2439	3543	4648	5752	6849	10138	12880	15621
		10015					3783	5861	7938	10016	12093	18326	23520	28713
3TG100904	G01009-SR4	11614			4820	7469	10117	12765	15414	18062	20710	28655		
		5708			2051	3459	4866	6271	7669	9066	10464	14657		
		10015			3053	5701	8350	10998	13646	16295	18943	26888		
3TG101004	G1010-SR4	11614		6488	10000	13511	17023	20534	24046	27557				
		5708		2938	4804	6664	8518	10371	12224	14078				
		10015		4721	4232	11744	15255	18767	22278	25790				
3TG101204	G01012-SR4	11614	9063	14096	19130	24163								
		5708	4306	6973	9630	12286								
		10015	7296	12329	17362	22395								
3TG101404	G01014-SR4	11614	13413	19534	25654									
		5708	6613	9843	13073									
		10015	11646	17766	23887									
3TG100803	G01008-SR3	13598						6048	8126	10203	12281	18513	23707	28901
		6605						2523	3631	4735	5839	9143	11884	14625
		11445						3669	5746	7824	9901	16434	21327	26521
3TG100903	G01009-SR3	13598				5889	8537	11185	13834	16482	19130	27075		
		6605				2437	3850	5257	6665	8071	9469	13662		
		11445				3509	6157	8806	11454	14102	16751	24695		
3TG101003	G01010-SR3	13598		4908	8420	11931	15443	18954	22466	25977				
		6605		1904	3787	5653	7520	9376	11229	13082				
		11445		2529	6040	9552	13063	16574	20086	23597				
3TG101203	G01012-SR3	13598	7483	12516	17550	22583								
		6605	3289	5964	8634	11291								
		11445	5104	10137	15170	20203								
3TG101403	G01014-SR3	13598	11833	17954	24074									
		6605	5601	8848	12078									
		11445	9453	15574	21695									

SCOTCH-YOKE ACTUATORS

TORQUE RATING - G SERIES

SPRING RETURN G1 PNEUMATIC ACTUATOR TORQUE CHART (CONT.)

APOLLO MODEL NO.	REFERENCE NUMBER	SPRING TORQUE (IN-LB) START/MIN/END	OPERATING PRESSURE (PSIG)											
			40	50	60	70	80	90	100	110	120	150	175	200
			OUTPUT TORQUE START/MIN/END (IN-LB)											
3TG100802	G01008-SR2	15526								8443	10521	16753	21947	27141
		7352								3692	4796	8109	10857	13598
		13037								5692	7770	14002	19196	24390
3TG100902	G01009-SR2	15526					6777	9425	12074	14722	17370	25315		
		7352					2800	4214	5622	7029	8437	12635		
		13037					4026	6674	3923	11971	14619	22564		
3TG101002	G01010-SR2	15526			6660	10171	13683	17194	20706	24217				
		7352			2736	4611	6477	8348	10202	12055				
		13037			3909	7420	10932	14443	17955	21466				
3TG101202	G01012-SR2	15526	5723	10756	15789	20823								
		7352	2228	4922	7597	10264								
		13037	2972	8005	13039	18072								
3TG101402	G01014-SR2	15526	10073	16194	22314									
		7352	4559	7811	11051									
		13037	7322	13443	19563									
3TG100801	G0108-SR1	18470									8599	14831	20025	25219
		8749									3364	6703	9463	12223
		14776									4516	10748	15942	21136
3TG100901	G0109-SR1	18470						7503	1152	12800	15448	23393		
		8749						2764	4207	5623	7030	11253		
		14776						3420	6069	8717	11365	19310		
3TG101001	G01010-SR1	18470				8249	11761	15272	18784	22295				
		8749				3174	5071	6937	8803	10669				
		14776				4166	7678	11189	14701	18212				
3TG101201	G01012-SR1	18470		8834	13868	18901								
		8749		3492	6190	8865								
		14776		4752	9785	14818								
3TG101401	G01014-SR1	18470	8151	14272	20392									
		8749	3121	6405	9658									
		14776	4068	10189	16309									

SCOTCH-YOKE ACTUATORS

TORQUE RATING - G SERIES

All published torques are guaranteed minimum values.

SPRING-RETURN ACTUATOR

APOLLO MODEL NO.	REFERENCE NUMBER	SPRING TORQUE (IN-LB) START/MIN/END	OPERATING PRESSURE (PSIG)								
			40	50	60	70	80	90	100	110	120
			OUTPUT TORQUE START/MIN/END (IN-LB)								
3TG200902	G2009-SR2	26818									14072
		12882									5964
		22074									8829
3TG201002	G2010-SR2	26818						13859	18810	22361	26611
		12882						5848	8110	10369	12628
		22074						8616	12866	17117	21368
3TG201202	G2012-SR2	26818			12159	18252	24344	30437	36530		
		12882			4926	8185	11423	14661	17896		
		22074			6915	13008	19101	25194	31286		
3TG201402	G2014-SR2	26818		12648	20057	27466	34875				
		12882		5191	9145	13082	17020				
		22071		7404	14814	22223	29632				
3TG201602	G2016-SR2	26818	14720	24500	34279						
		12882	6308	11506	16703						
		22074	9477	19256	29036						
3TG200901	G2009-SR1	30997									
		14742									
		25004									
3TG201001	G2010-SR1	30997							14871	19122	23373
		14742							5957	8249	10508
		25004							8248	12498	16749
3TG201201	G2012-SR1	30997					21106	27199	33291		
		14742					9303	12541	15779		
		25004					14482	20575	26668		
3TG201401	G2014-SR1	30997			16819	24228	31637				
		14742			7014	10962	14900				
		25004			10195	17604	25013				
3TG201601	G2016-SR1	30997		21261	31041						
		14742		9386	14583						
		25004		14638	24417						
3TG200904	G2009-SR4	20678						10155	13361	16567	19772
		9903						4185	5900	7603	9307
		16917						5998	9204	12410	15616
3TG201004	G2010-SR4	20678				11058	15308	19559	23810	28061	32311
		9903				4675	6935	9194	11453	13712	15956
		16917				6901	11152	15402	19653	23904	28155
3TG201204	G2012-SR4	20678		11766	17859	23952	30044	36137	42230		
		9903		5052	8290	11528	14760	17975	21191		
		16917		7609	13702	19795	25888	31980	38073		
3TG201404	G2014-SR4	20678	10939	18348	25757	33166	40575				
		9903	4610	8550	12488	16407	20318				
		16917	6782	14191	21600	29009	36419				
3TG201604	G2016-SR4	20678	20420	30200	39979						
		9903	9652	14842	20003						
		16917	16264	26043	35823						
3TG200903	G2009-SR3	24139								13833	17039
		11457								5833	7539
		19390								8584	11790
3TG201003	G2010-SR3	24139					12575	16826	21077	25327	29578
		11457					5150	7426	9685	11944	14203
		19390					7326	11577	15828	20078	24329
3TG201203	G2012-SR3	24139			15126	21219	27311	33404	39497		
		11457			6522	9760	12998	16236	19460		
		19390			9877	15970	22062	28155	34248		
3TG201403	G2014-SR3	24139		15615	23024	30433	37842				
		11457		6782	10720	14657	18587				
		19390		10366	17775	25184	32593				

SCOTCH-YOKE ACTUATORS

TORQUE RATING - G SERIES

SPRING-RETURN ACTUATOR (CONT.)

APOLLO MODEL NO.	REFERENCE NUMBER	SPRING TORQUE (IN-LB) START/MIN/END	OPERATING PRESSURE (PSIG)								
			40	50	60	70	80	90	100	110	120
			OUTPUT TORQUE START/MIN/END (IN-LBS)								
3TG201603	G2016-SR3	24139	17687	27467	37246						
		11457	7883	13081	18273						
		19390	12438	22218	31997						
3TG301002	G3010-SR2	49017									20655
		22571									6848
		36975									7346
3TG301202	G3012-SR2	49017						25456	32826	40195	47564
		22571						9568	13568	17516	21433
		36975						12147	19516	26886	34255
3TG301402	G3014-SR2	49017				21936	30907	39879	48851	57823	
		22571				7591	12527	17349	22117	26885	
		36975				8626	17598	26570	35542	44514	
3TG301602	G3016-SR2	49017			30278	42135	53993				
		22571			12185	18548	24849				
		36975			16968	28826	40683				
3TG302002	G3020-SR2	49017	34398	53215							
		22571	14422	24436							
		36975	21089	39905							
3TG301001	G3010-SR1	54045									
		25307									
		42224									
3TG301201	G3012-SR1	54045							27024	34394	41763
		25307							10497	14497	18420
		42224							13960	21329	28698
3TG301401	G3014-SR1	54045					25106	34078	43050	52022	
		25307					9456	14326	19104	23873	
		42224					12041	21013	29985	38957	
3TG301601	G3016-SR1	54045			24476	36334	48191				
		25307			9107	15535	21837				
		42224			11412	23269	35127				
3TG302001	G3020-SR1	54045	28597	47413							
		25307	11351	21423							
		42224	15532	34349							
3TG301004	G3010-SR4	36568							19695	24822	29949
		17123							7867	10637	13361
		28566							10851	15978	21105
3TG301204	G3012-SR4	36568				20012	27381	34751	42120	49489	56858
		17123				8038	11996	15913	19830	23746	27663
		28566				11168	18537	25906	33276	40676	48014
3TG301404	G3014-SR4	36568			22258	31239	40201	49173	58145	67117	
		17123			9257	14042	18810	23578	28347	33089	
		28566			13414	22385	31357	40329	49301	58273	
3TG301604	G3016-SR4	36568	15857	27714	39572	51429	63287				
		17123	5764	12174	18475	24777	31068				
		28566	7013	18870	30728	42585	54443				
3TG301003	G3010-SR3	42128								20609	25735
		19573								7746	10528
		32379								9833	14960
3TG301203	G3012-SR3	42128					23167	30537	37906	45275	52645
		19573					9135	13115	17032	20949	24865
		32379					12392	19761	27130	34500	41869
3TG301403	G3014-SR3	42128			18044	27016	35988	44960	53931	62903	
		19573			6305	11223	16012	20781	25549	30317	
		32379			7268	15240	25212	34184	43156	52127	
3TG301603	G3016-SR3	42128		23501	35358	47216	59073				
		19573		9315	15678	21980	28282				
		32379		12725	24582	36440	48297				
3TG302003	G3020-SR3	42128	39479	58295							
		19573	17868	27868							
		32379	28703	47519							

aalberts integrated piping systems

AE SERIES

FEATURES

Ruggedly built and designed for easy installation, new Apollo AE Series electric actuators deliver the most standard features and performance in their class. Now CSA listed all sizes as standard.

FIVE OUTPUT TORQUES, ONE HOUSING

- 200, 400, 600, 800 and 1,000 inch-pounds
- Long service life
- Anodized die cast aluminum housing
- Fiberglass reinforced nylon cover resists corrosion
- Nitrile gasket and seals cover all penetration points in housing and cover
- Precision cut and heat treated alloy spur gears
- Permanently lubricated enclosed gear train
- NEMA 4, 4X

EASY TO USE

- Two separate 1/2" NPT conduit entrances for easier wiring and signal separation
- 12-position pre-wired terminal strip includes standard connections for remote open/closed position indicators; lots of room for wiring options
- Unrestricted mounting orientation
- Built-in thermal overload protection in all AC motor actuators
- Limit switches have an 11 amp rating at 115 VAC
- High visibility valve position indicator standard on all models

4-20MA POSITIONER FEATURES (P - OPTION)

Advanced Protection Features

- Stall Detection - Motor will not burn out from stalling
- Fault Signal - Fault LED on DHC-100 front panel
- Duty Cycle Protection - Allows actuators rated for 25% duty, or more, to be safely modulated. Activates prior to tripping of thermal overload protector, which prevents long shut down periods due to tripping thermal overload protector; allows the actuator to continue to move to set-point at a 25% duty cycle speed

Performance Features

- High Resolution (± 0.1°) 450 points of resolution on a 1/4 turn valve
- Dynamic Braking - Stops motor before changing actuator direction. Stops motor before mechanical brake engages, which reduces break wear
- Adaptive Control - Designed to maintain high resolution and accuracy by continuously monitoring and compensating for actuator backlash, motor coast, and load changes to eliminate positioner deadband

MANY STANDARD FEATURES

- Stainless steel push-and-turn manual override shaft, position indicator shaft and female output
- ISO 5211 F07 drive output reduces inventory of mounting kits
- 115 AC & 220 AC models feature a 25% duty cycle below 100˚F (24AC — 20% duty cycle below 100˚F)
- 12 and 24 DC — all DC voltage models provide 100% duty cycle for 1 hour after which DC motor is reduced to 80% duty cycle.
- Reversible rotation

BROAD TEMPERATURE RANGE

- Operates from -40˚F (when equipped with 15 watt heater and thermostat) to 150˚F

AVAILABLE OPTIONS

- Actuators can be ordered with one, two or three additional limit switches
- For low temperatures: actuators can be equipped with a thermostatically controlled heater element
- Motor brake is necessary when mounting actuator to a butterfly valve

4-20MA POSITION TRANSMITTER FEATURES (T - OPTION)

- High Resolution Feedback Transmitter - Provides voltage or mA output that can be set for any range (0 to 10 VDC in 0.0016 V steps or 0 to 20 mA in 0.0031 mA steps)
- Auto/Manual Station (Local Control Unit - LCU)
- Polarity Detection

AE SERIES

GENERAL SPECIFICATIONS & DIMENSIONS

ACTUATOR MODEL	BREAKAWAY TORQUE OUTPUT (IN.-LB)	CYCLE TIME 90˚ TRAVEL (50% LOAD)	DUTY CYCLE	AMPERAGE DRAW (MAX.) STARTING OR LOCKED ROTOR CURRENT VOLTAGE			
				115 VAC	230 VAC	12 VDC	24 VDC
AE200	200 in-lbs	5.0 sec.	25%	.74 amp	.44 amp	1.6 amp	1.7 amp
AE400	400 in-lbs	10.0 sec.	25%	.74 amp	.44 amp	1.6 amp	1.7 amp
AE600	600 in-lbs	15.0 sec.	25%	.74 amp	.44 amp	1.6 amp	1.7 amp
AE800	800 in-lbs	20.0 sec.	25%	.74 amp	.44 amp	1.6 amp	1.7 amp
AE1000	1000 in-lbs	25.0 sec	25%	.74 amp	.44 amp	1.6 amp	1.7 amp

Note: 90˚ travel = travel from closed position to open position or vice versa.
DC current draw is at max. torque
24 VAC current draw at locked rotor 4.6 amp

Motor	AC models: 120 VAC or 230 VAC, Reversible 3 wire, capacitor run. Self-resetting (thermal) overload protection, Class B insulation, sub-fractional horsepower.
	DC models: 12 VDC or 24 VDC, Reversible 2 wire, POS & NEG. No thermal overload (external circuit breaker or fuse suggested for protection.)
Lubrication	Permanently lubricated gear train and bearings
Duty Cycle	The AE-Series actuators are designed to operate at 25% duty cycle at temperatures below 100˚F. See Electrical Operation. (24 AC-20% duty cycle below 100˚F)
Temperature Operating	32˚F to 150˚F Max
Range	-40˚F to 150˚F with optional heater & thermostat
Thermal Protection	Self-resetting (AC Motors Only)
Conduit Connections	(2) 1/2"-NPT female
Direction Of Travel	Clockwise to Close, Counterclockwise to Open (Position indicator shaft only, manual override shaft rotates opposite)

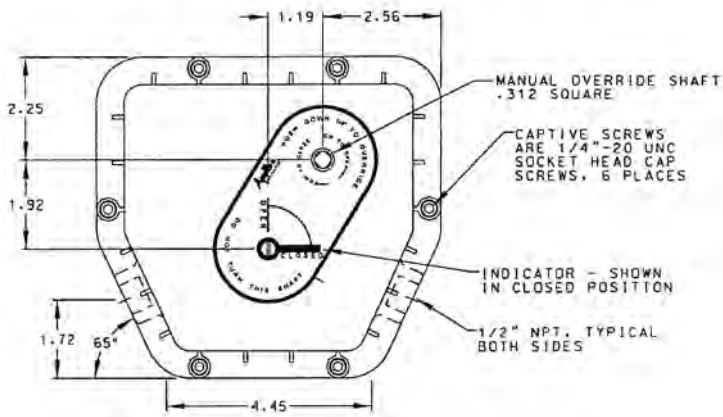

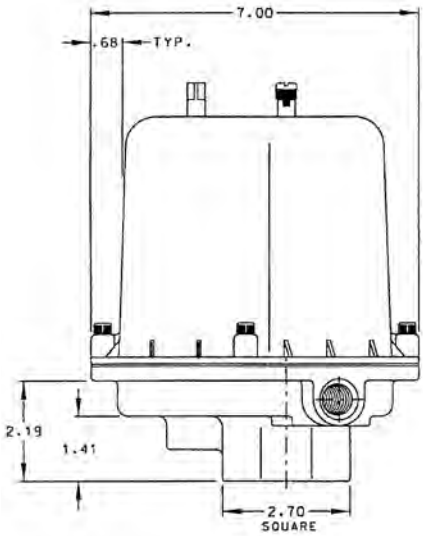

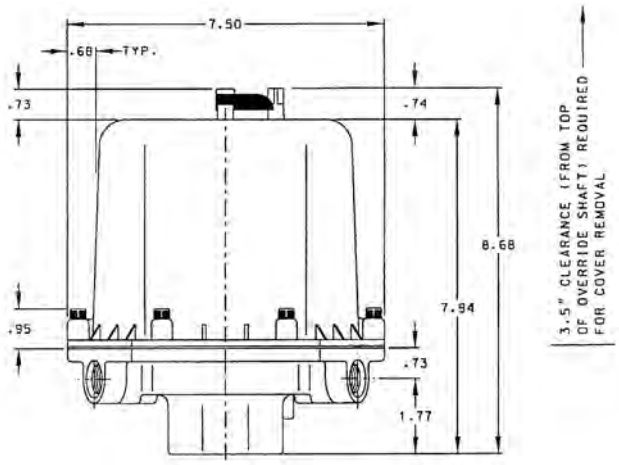

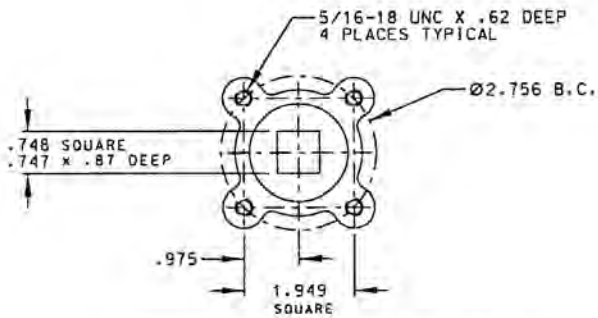

MOUNTING PATTERN ISO 5211 - F07

AE SERIES

WIRING DIAGRAMS

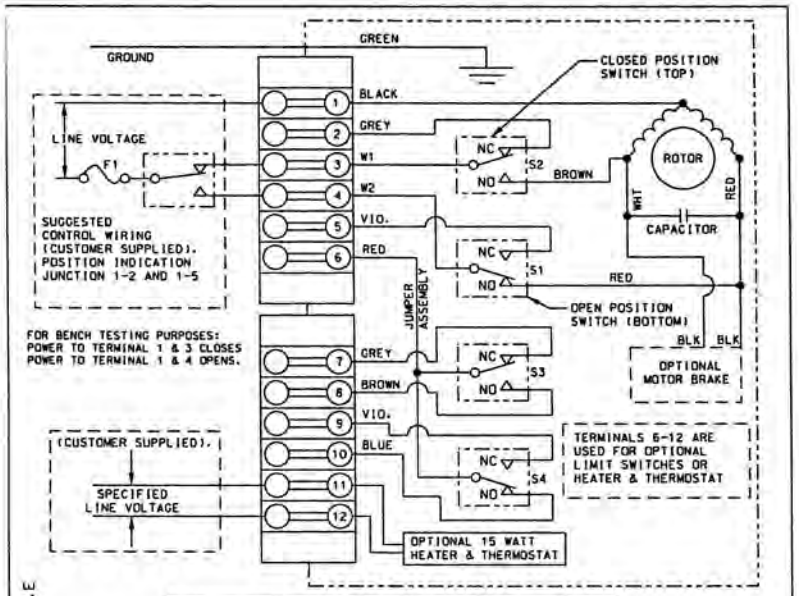

LINE VOLTAGE	W1	W2	F1 OPTIONAL
24 VAC 60 HZ 1PH	RED	BLUE	5 AMP
115 VAC 60 HZ 1PH	RED	BLUE	1 AMP
230 VAC 60 HZ 1PH	YELLOW	BLUE	.75 AMP

DUE TO HIGH AC INDUCTION FEEDBACK VOLTAGE THROUGH THE CAPACITOR AND TERMINALS 3 & 4, MULTIPLE ACTUATORS CANNOT BE WIRED IN PARALLEL. SEPERATE RELAYS (ISOLATED CONTACTS) MUST BE PROVIDED FOR EACH ACTUATOR. DEVICES CONNECTED TO TERMINALS 3 & 4 MUST BE RATED FOR 250 VAC OR (440 VAC FOR 230 VAC OPERATION VOLTAGE.)

24/115/230 VAC Wiring Diagram

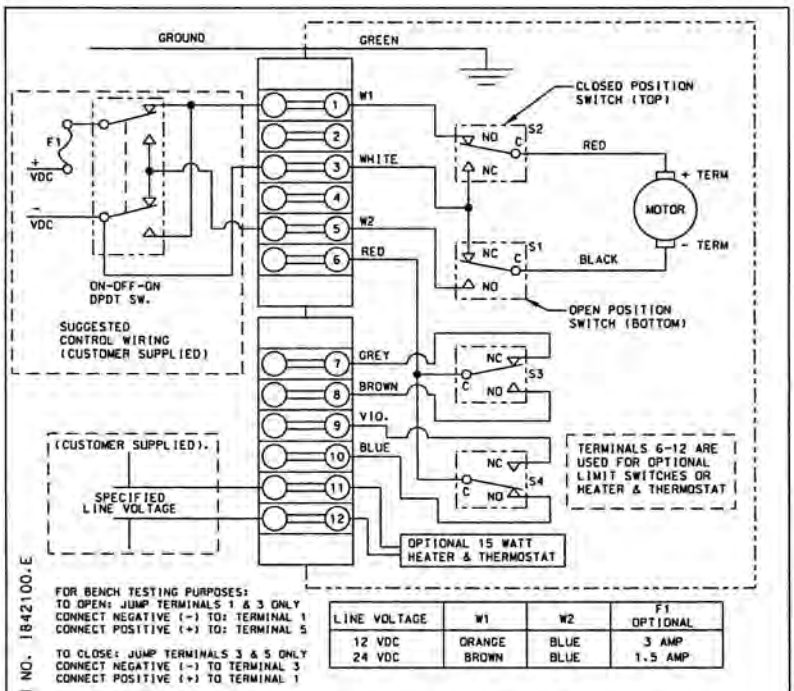

FOR BENCH TESTING PURPOSES:
TO OPEN: JUMP TERMINALS 1 & 3 ONLY
CONNECT NEGATIVE (-) TO: TERMINAL 1
CONNECT POSITIVE (+) TO: TERMINAL 5

TO CLOSE: JUMP TERMINALS 3 & 5 ONLY
CONNECT NEGATIVE (-) TO TERMINAL 3
CONNECT POSITIVE (+) TO TERMINAL 1

LINE VOLTAGE	W1	W2	F1 OPTIONAL
12 VDC	ORANGE	BLUE	3 AMP
24 VDC	BROWN	BLUE	1.5 AMP

12/24 VDC Wiring Diagram

AE SERIES

HOW TO ORDER

AE -	400 -	3	BF
PREFIX	TORQUE (IN - LB)	VOLTAGE	OPTIONS
AE	200	1 - 115 VAC	0 - STANDARD
	400	2 - 24 VAC	A - ONE EXTRA SWITCH & CAM*
	600	3 - 220 VAC	B - TWO EXTRA SWITCHES & CAMS*
	800	4 - 12 VDC	C - THREE EXTRA SWITCHES AND CAMS*
	1000	5 - 24 VDC	D - HEATER AND THERMOSTAT (15 WATT)
	ENTER ALL DIGITS OF TORQUE VALUE		F - MOTOR BRAKE (115 VAC & 24 VAC ONLY)
			H - TROPICAL HEATER (15 WATTS)
			P - POSITIONER 4-20 MA
			T - TRANSMITTER 4-20 MA

Note: AE will always be the first two characters of the part number, all digits from torque value must be entered into part number (i.e. 400, 1000, etc.) Only use one digit for voltage depiction (i.e. 1-5). For the options listing you may use more than one character, up to three, (i.e. O, AD or BD etc.)

1 Year warranty on positioner & positioner with transmitter
Transmitter available with (P) positioner option only
Positioner & transmitter are not CSA listed
** Not available with "P" option*

EXAMPLE
AE-400-2BF:
400 in-lb.; 24 VAC; 2 extra switches and cams, motor brake

AE-1000-1D:
1000 in-lb.; 115 VAC; Heater and thermostat

CS & CL SERIES

FEATURES

CS and CL electric actuators are split phase reversing AC motors for standard duty or brushless DC Motors for continuous duty. Eight sizes are available which produce breakaway torques between 150 and 3000 lb-in. They are excellent industrial quality units capable of on/off, fail safe, and modulating applications. The efficient spur gear drive train is supported by permanently-lubricated bearings making it very secure while eliminating the potential for side loading of the output shaft.

Apollo offers as standard a 75% duty cycle AC motor. Continuous-duty brushless DC motors are also available for a range of input voltages. All units are rated for use in ambient environments from -40°F (with optional heater & thermostat) to 150°F (note that units equipped with an internal battery are rated to 130°F).

HAZARDOUS LOCATION ENCLOSURES

The standard enclosures (CS and CL) are rated for NEMA 4/4X (weather tight and corrosion resistant). The Hazardous Location enclosures are rated for NEMA 4/4X/7 & 9, Class I, Div 1, Groups C&D; Class II, Div. 2, Groups E, F, & G; Class III.

(CSA) CERTIFICATIONS

Certification by the Canadian Standards Association of either hazardous or weatherproof locations is standard on all CS & CL models.

FEATURES

- Plug-in connectors for the motor, the brake option and the heater/thermostat option
- All connectors are coded to prevent mis-wiring.
- Limit switch wires are soldered to the board - no more loose connections.
- A six position terminal strip clearly labeled so it can be wired up in the
- ield without an instruction manual.
- Thermal overload protection (AC motors)
- Dual conduit openings; 3/4" (1/2" with supplied bushings)
- Visual position indication
- All aluminum enclosure
- Captive cover bolts on CS Series
- Manual override shaft (optional handwheel override with declutchable shaft)

CS & CL SERIES

DIMENSIONS

INTRODUCING SIMPLICITY FOR CALIBRATING MODULATING ACTUATORS

The control board brings a whole new level of simplicity to the field. It will work with either of the motor boards (115VAC or 230VAC).

FEATURES INCLUDE:

- Switch selector for 4-20mA or 0-10VDC input
- Switch selector for 4-20mA or 0-10VDC position readback
- Switch selector for either "fail in-place" or "fail to zero" upon loss of control signal (provided input power remains)
- On-board push buttons to manually position the actuator
- A "Mode Selector" switch with LEDs, which are used for:
  - "No tools" pot calibration
  - Setting Zero and span
  - Manually positioning the actuator
- An adjustable pot for speed control (motor pulsing)
- An adjustable pot for deadband adjustment
- Locked rotor protection if the actuator cannot achieve the position commanded by the control signal, it will cut power to the motor. Repeated stalls will not damage the actuator.
- Reverse acting operation with no rewiring.
- Split range operation with no rewiring.

CS DIMENSIONS

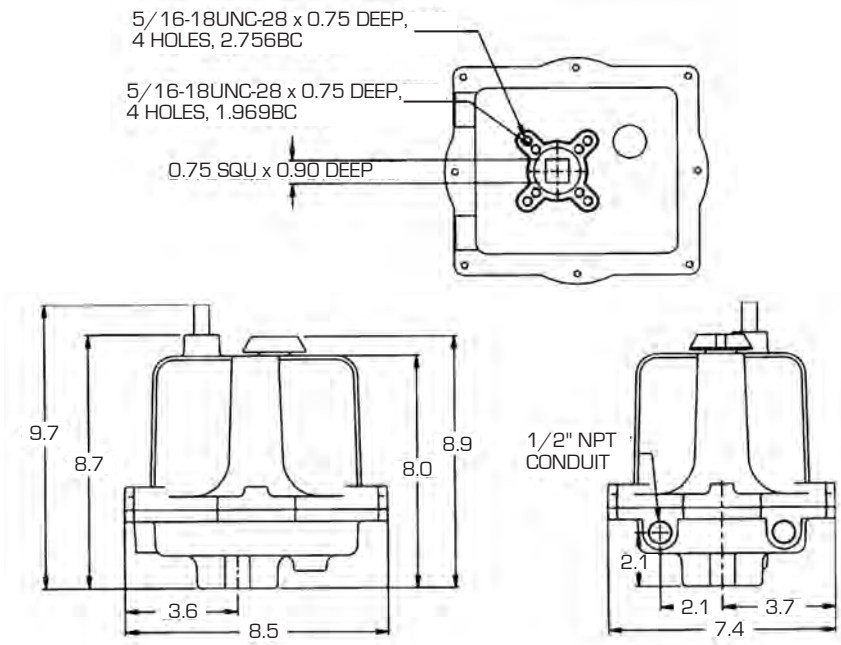

CL DIMENSIONS

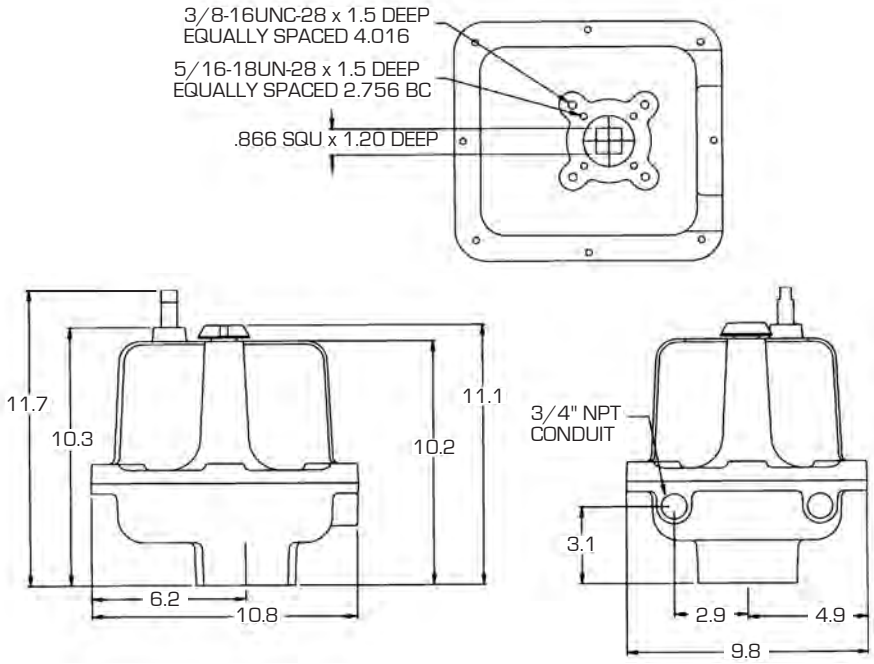

aalberts integrated piping systems

CS & CL SERIES

SPECIFICATIONS & OPTIONS

CS & CL EXTENDED DUTY DATA

TECHNICAL DATA—115VAC AND 230VAC MODELS*

SERIES	TORQUE OUTPUT (BREAKAWAY)	SPEED (SECONDS PER 90° ROTATION)	DUTY CYCLE	VA RATING		MAX RUNNING CURRENT AT FULL LOAD (TRUE RMS)		MAX EFFECTIVE PEAK INRUSH CURRENT (=.66 X PEAK INRUSH)	
				115 VAC	230 VAC	115 VAC	230 VAC	115 VAC	230 VAC
CS	150 in lb	8	75%	70vA	115vA	0.6 amps	0.5 amps	1.25 amps	0.924 amps
	300 in lb	15	75%	70vA	115vA	0.6 amps	0.5 amps	1.25 amps	0.924 amps
	600 in lb	30	75%	70vA	115vA	0.6 amps	0.5 amps	1.25 amps	0.924 amps
CL	1000 in lb	25	75%	92vA	161vA	0.8 amps	0.7 amps	1.66 amps	1.29 amps
	1500 in lb	40	75%	92vA	161vA	0.8 amps	0.7 amps	1.66 amps	1.29 amps
	2000 in lb	55	75%	92vA	161vA	0.8 amps	0.7 amps	1.66 amps	1.29 amps
	2500 in lb	70	75%	92vA	161vA	0.8 amps	0.7 amps	1.66 amps	1.29 amps
	3000 in lb	75	55%	92vA	161vA	0.8 amps	0.7 amps	1.66 amps	1.29 amps

CS & CL CONTINUOUS DUTY DATA

SERIES	TORQUE (IN-LB)	DUTY CYCLE	12 VDC		24 VDC		24 VAC		115 VAC		230 VAC	
			CYCLE TIME (SEC/90°)	CURRENT DRAW AMPS	CYCLE TIME (SEC/90°)	CURRENT DRAW AMPS	CYCLE TIME (SEC/90°)	CURRENT DRAW AMPS	CYCLE TIME (SEC/90°)	CURRENT DRAW AMPS	CYCLE TIME (SEC/90°)	CURRENT DRAW AMPS
CS	150	100%	11	2.2	13	1.2	8	1.8	9	0.4	9	0.4
	300	100%	17	2.5	13	1.4	12	2.1	13	0.5	13	0.4
	600	100%	17	2.8	13	1.7	13	2.5	14	0.6	14	0.5
CL	1000	100%	21	4	14	2.4	15	3.5	15	0.9	15	0.6
	1500	100%	40	4	24	2.4	27	3.5	29	0.9	29	0.6
	2000	100%	40	4.3	33	2.4	28	3.5	29	0.9	29	0.6
	2500	100%	55	3.3	40	2	38	3.1	39	0.8	39	0.6
	3000	100%	60	3.7	42	2.2	40	3.5	42	0.8	43	0.6

**Notes:*

1. *The Current Draws stated above include all options. If the brake and/or heater & thermostat are not installed, the actual current draws will be less.*
2. *For Extended Duty Cycle Models, Current Draws are provided at full running torque. If the actuator encounters an overtorque condition, such as a stall condition, the Current Draw will be vastly increased.*
3. *Continuous Duty actuators contain brushless DC motors and are therefore not limited by duty cycle restraints in environments at or below 104°F; in ambient environments above this temperature the duty cycle is de-rated to 80%.*

ACTUATOR MODEL NUMNBERS/DESCRIPTION

- 115 — 115 VAC Motor (Standard or Continuous)
- 230 VAC — 230 VAC Motor (Standard or Continuous)
- J — Speed Control/Timer Board
- X — NEMA 4,4X,7 & 9
- W — NEMA 4 & 4X
- H — Tropical Heater
- S2 — Two Auxiliary Switches SPDT
- T — Heater and Thermostat
- K — Motor Brake[2]
- Z — Declutchable Handwheel Override
- P — Feedback Potentiometer (0-1000 Ohm)

• CSA certification with (C US) marking is standard on all standard (extended) duty models.
• CSA certification with (C US) marking is standard on continuous duty models ordered with enclosure option "E".
[2] Standard on continuous duty cycle units

CS & CL SERIES

HOW TO ORDER

HOW TO ORDER CS & CL EXTENDED DUTY CYCLE ACTUATOR

PART NUMBER MATRIX

SERIES	TORQUE	ENCLOSURE	GENERAL OPTIONS	DUTY CYCLE	VOLTAGE
CS	600	W	S2	E - STANDARD	115 VAC
CL	1500	X	S2	E - STANDARD	230 VAC

HOW TO ORDER CS CONTINUOUS DUTY CYCLE ACTUATOR

PART NUMBER MATRIX

3RA	CS	600	W	UL2	Z
PREFIX	SERIES	TORQUE	ENCLOSURE	OPTIONS[2]	ADDITIONAL OPTIONS
3RA	CS	150 IN-LB, 12 FT-LB, 17 NM	W - NEMA 4/4X	U2 - ON/OFF/POSITION BOARD	-- NO ENTRY IF STANDARD
		300 IN-LB, 25 FT-LB, 34 NM	X - NEMA 4/4X/7&9	UL2 - ON/OFF/POSITION BOARD	Z - HANDWHEEL
		600 IN-LB, 50 FT-LB, 68 NM		W/ BATTERY BACKUP	

HOW TO ORDER CL CONTINUOUS DUTY CYCLE ACTUATOR

PART NUMBER MATRIX

3RA	CL	2500	X	UL3	-
PREFIX	SERIES	TORQUE	ENCLOSURE	OPTIONS[2]	ADDITIONAL OPTIONS
3RA	CL	1000 IN-LB, 83 FT-LB, 113 NM	W - NEMA 4/4X	U2 - ON/OFF/POSITION BOARD	-- NO ENTRY IF STANDARD
		1500 IN-LB, 125 FT-LB, 169 NM	X - NEMA 4/4X/7&9	UL3 - ON/OFF/POSITION BOARD	Z - HANDWHEEL
		2000 IN-LB, 167 FT-LB, 226 NM		W/ BATTERY BACKUP	
		2500 IN-LB, 208 FT-LB, 282 NM			
		3000 IN-LB, 250 FT-LB, 339 NM			

1. All Continuous Duty Cycle CS/CL actuators accept any of the following input voltage (12VDC, 24VDC, 24VAC, 115VAC, & 230VAC), are rated for continuous duty cycle, include a holding brake, two auxiliary limit switches, 4-20mA or 0-10VDC position feedback, wrench-operated manual override, CSA "C US" certification, CE compliance, and a heater/thermostat that can be user-enabled on the option board.

2. Only one board option can (and must) be selected. All board options can be configured for On/Off or modulating operation.

LB SERIES

SPECIFICATIONS & OPTIONS

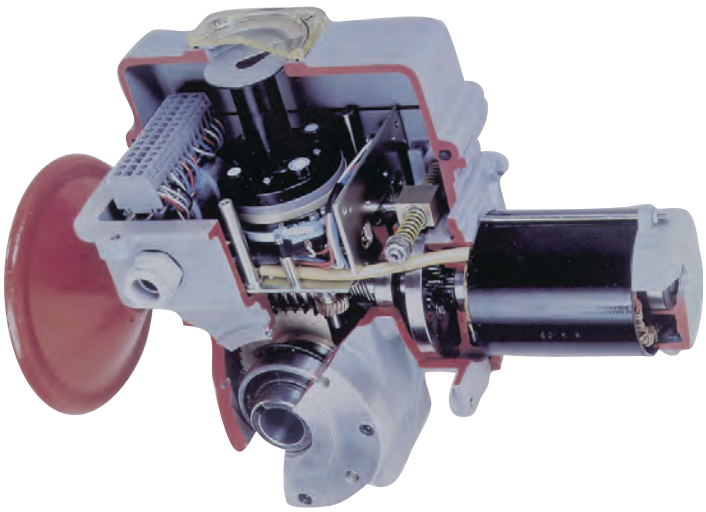

The LB-Series is available in several basic designs with a wide variety of configurations from which to select torque and speeds to meet specific application requirements. These rugged and uncomplicated actuators provide a practical and reliable method for turning any mechanism 90˚. Torques range from 540 inch-pounds to 54,000 inch-pounds (6.25 to 625 kilogram-meters). Electrical models are available in 115 VAC-50/60 Hz single phase, 200 VAC-50/60 single phase; and 220/440 VAC-50/60 Hz three phase. Models are available for on/off modulating control.

Listed below are performance specifications for a limited sampling of LB-Series electric actuators. This product family is available with a such a variety of options and features that they can not be represented in this catalog. Options such as positioners, transmitters, special enclosure ratings, extra switches, or motor voltages are optionally available. Contact Apollo's Actuator Engineering Department for the proper actuator to fit non standard or unique requirements.

PART NUMBER MATRIX

3R	AD	M	05	B	X	F
PREFIX	TYPE	MODULATION	TIME (S)	VOLTAGE	OPTIONS	DRIVE
3R	AC - OA6	M - MODULATING	05 - 5 SECONDS	A - 1/60/115 VAC	CONTROL SWITCHES*	F - FEMALE
	AD - OA8	BLANK - NONMODULATING	25 - 25 SECONDS	B - 1/60/220 VAC	H - HEATER	M - MALE
	AE - OA15		50 - 50 SECONDS	C - 3/60/460 VAC	P - POTENTOMETER	
	AF - AT18			D - 3/60/600 VAC	MS - POSIGAM+	
	AG - AT25			E - 3/60/230 VAC		
	AH - AT50			G - 1/50/220 VAC		
	AJ - BT50			H – 3/50/380 VAC		
	AK - BT100			I - 3/50/400 VAC		
				J - 1/50/115 VAC		
				K - 24 VDC		

**Consult factory for any additional options or variations not shown here*

LB SERIES ELECTRIC ACTUATOR PERFORMANCE DATA

L-B SERIES MODEL NUMBER	TORQUE OUTPUT LB-IN	ROTATING SPEED (SEC/90 DEGREE)		POWER REQUIREMENTS 30% DUTY CYCLE			
				115VAC 1 PH 60HZ		460 VAC 3 PH 60 HZ	
		STD	OPT	RATED	START	RATED	START
OA8	885	5		1.95	3.3	0.63	1.15
OA8	885	25		1.25	2	0.39	0.78
OA15	1350	15	25	1.95	3.3	0.39	0.78
AT25	2250	15		1.95	3.3	0.63	1.15
AT25	2250	25	50	1.95	3.3	0.39	0.78
AT50	4500	25		4.6	12	0.63	1.15
AT100	8850	24	12	4	17	0.6	1.2

Contact factory for part numbers of actuators with options & other voltages

Notes:

- *Operating speed is based on an actuator operating at rated output torque. Actual operating speed will vary depending on actual output torque.*
- *All torque and speed ratings are based on a plus or minus 10% motor voltage variation.*
- *All torque ratings represent the maximum torque available during both breakaway (start) and run (dynamic) conditions.*
- *Each actuator is supplied, as standard, with a 30% duty cycle, F insulation, TENV design motor rated for 360 starts per hour at 104˚F.*
- *All actuators are NEMA 4 rated as standard. Many are optionally available with additional ratings, such as, explosion proof or submersible, etc., to meet special service requirements.*
- *All actuators utilize a self-locking gear train design and have provision for manual override.*
- *All actuators have both electrical and mechanical travel stop provisions.*
- *FQ Series are Spring Return Failsafe models. Contact factory for model number and price (not listed above).*

LB SERIES

DIMENSIONS

TYPES AO8 AND OA15

Standard specification: Weatherproof NEMA 4, with two adjustable SPDT limit switches; with built-in motor thermal cutouts, with handwheel for manual operation. Duty rating 30%.

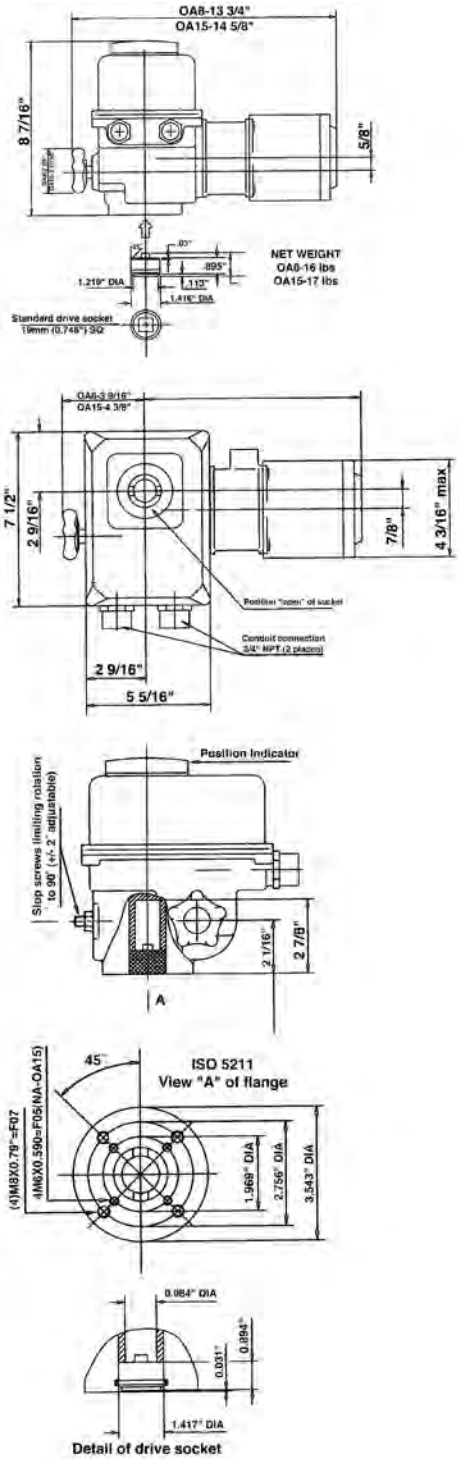

TYPES AT25 AND AT50

Standard specification: Weatherproof to NEMA 4, fitted with two adjustable SPDT travel limit switches (one for each extreme position); two SPDT torque limit switches (one for each direction of rotation) and with handwheel for manual operation.

Duty rating 30%. Net weight: 40 lb.
AT25 female socket dimension = .866 square
AT50 female socket dimension = 1.063 square

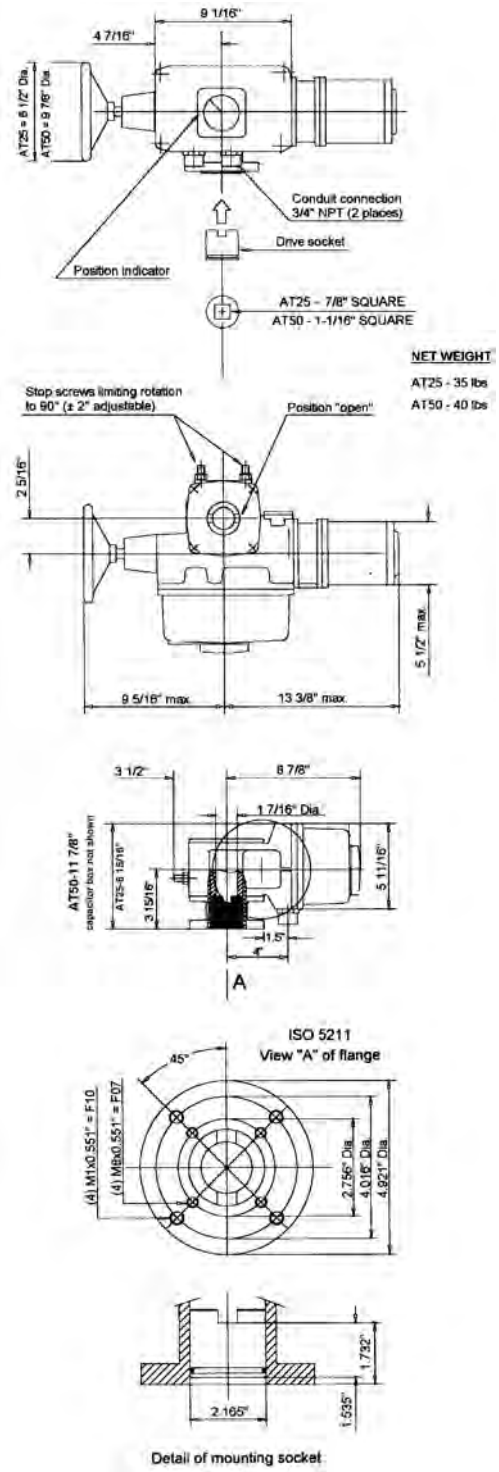

aalberts integrated piping systems

LB SERIES

DIMENSIONS

TYPE AT100

Standard specification: Weatherproof to NEMA 4, fitted with two adjustable SPDT travel limit switches (one for each extreme position); two SPDT torque limit switches (one for each direction of rotation) and with handwheel for manual operation. Duty rating 30%.

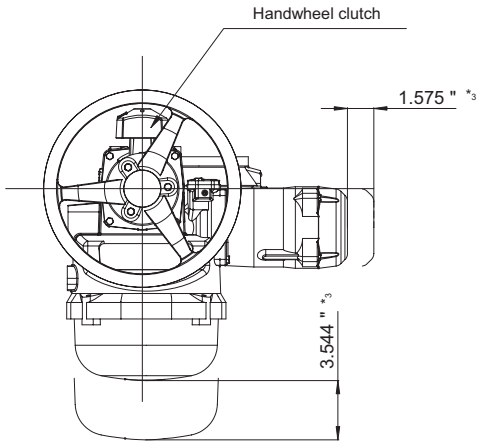

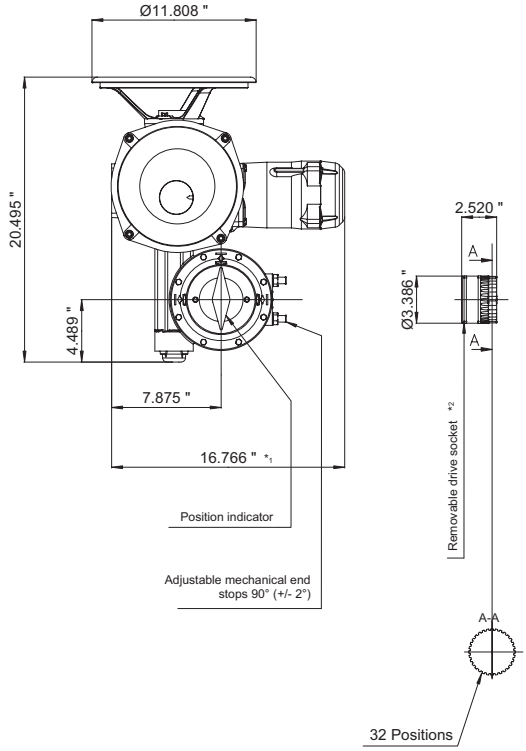

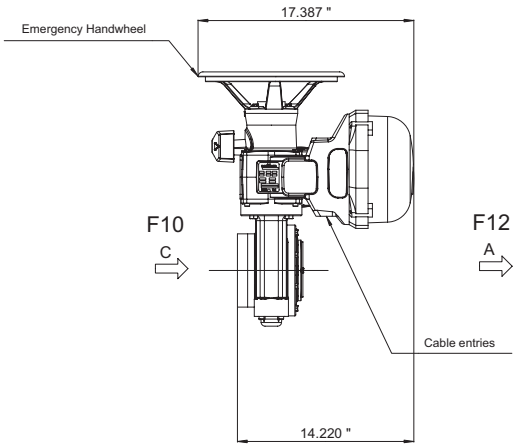

ISO 5211
F10
View C of the flange

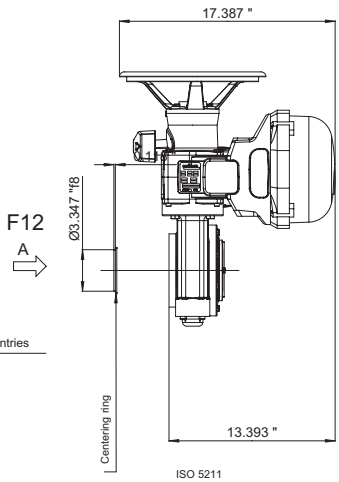

ISO 5211
F12
View A of the flange

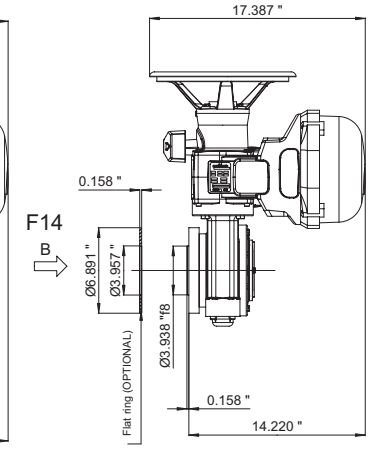

ISO 5211
F14
View B of the flange

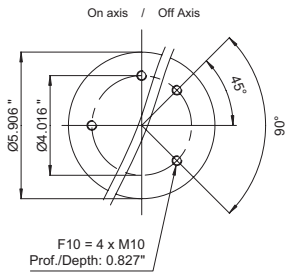

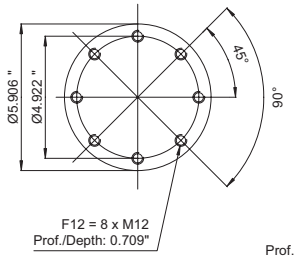

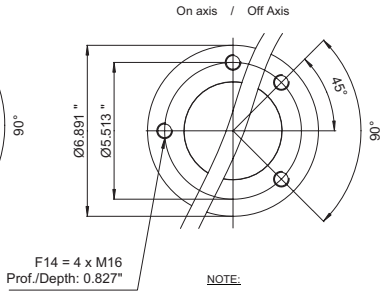

NOTE:

*1 The actuator is represented in its maximum size.

*2 Representation of the socket in closed position.

*3 Dimension to allow for dissassembly

SOLENOIDS

GENERAL SPECIFICATIONS

DIRECT MOUNTED NAMUR SOLENOID VALVES

TEMPERATURE LIMITS:

- Media: 0°F to +180°F.
- Ambient:
  NEMA 4, 4X, 0°F to +180°F.
  NEMA 4-4X-7-9, 0°F to +125°F.

COIL RATINGS:

- NEMA 4, 4X: Continuous duty molded Class H insulation.
- NEMA 4-4X-7-9: Continuous duty molded Class F

COIL VOLTAGES AVAILABLE:

- Coil Voltage Variation: +/-10% of Nominal
  120 VAC-60 Hz/110 VAC-50 Hz.
  240 VAC-60 Hz/220 VAC-50 Hz/120 VDC.
  48 VAC-60 Hz/44 VAC-50 Hz/24 VDC.
  24 VAC-60 Hz/22 VAC-50 Hz/12 VDC.

POWER CONSUMPTION:

- 6 Watts

MATERIALS:

- Valve Body=Aluminum, anodized.
- Fasteners=Stainless Steel
- Seals & O-Rings=Nitrile.

CV FLOW RATE:

- 1.8

NEMA 4-4X UL, CSA, PTB&CE

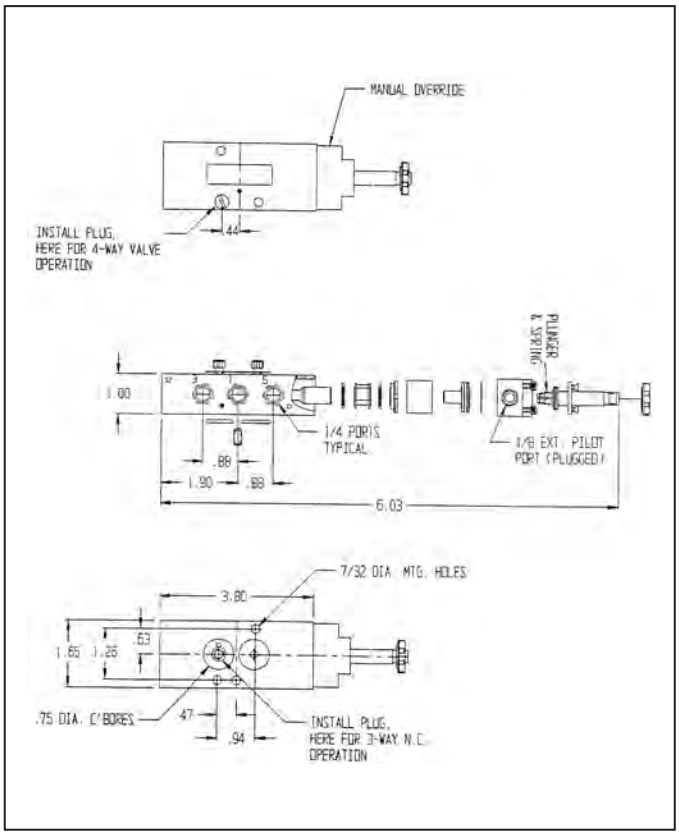

NEMA 4, 4X, 7 & 9 UL, CSA, PTB&CE

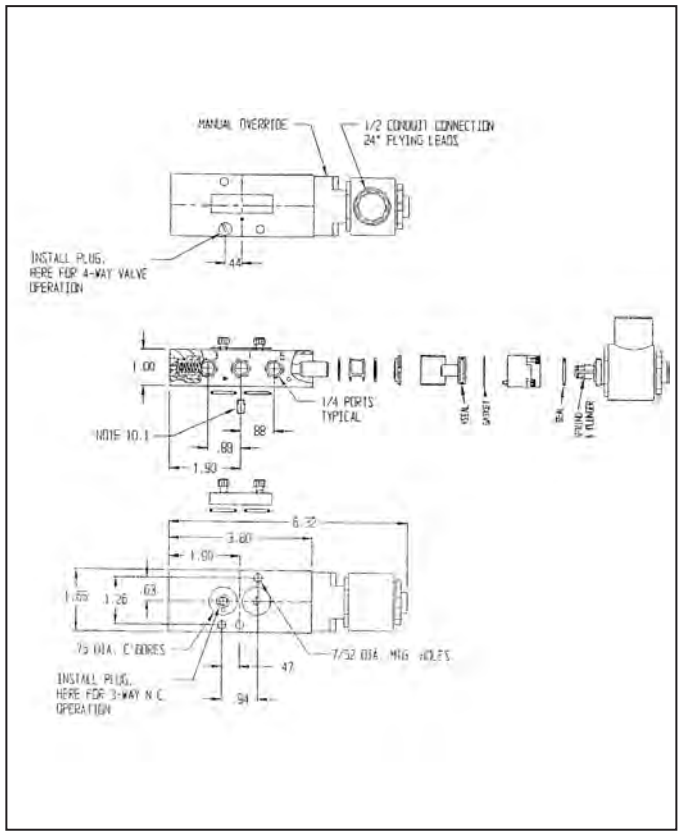

aalberts integrated piping systems

NAMUR SOLENOID VALVE WITH TRANSITION PLATE

SOLENOID VALVES

AVC NAMUR *Three & Four-way, end mounted coil
Solenoids: Cv=1.8
For NAMUR Direct Mount

PART NO.		
3T8-411-40A	115 VAC NEMA 4	0025 thru 4000
3T8-421-40A	12 VDC/24 VAC NEMA4	0025 thru 4000
3T8-431-40A	24 VDC/48 VAC NEMA4	0025 thru 4000
3T8-441-40A	220 VAC NEMA4	0025 thru 4000
3T8-711-40A	115 VAC NEMA7	0025 thru 4000
3T8-721-40A	12 VDC/24 VAC NEMA7	0025 thru 4000
3T8-731-40A	24 VDC/48 VAC NEMA7	0025 thru 4000
3T8-741-40A	220 VAC NEMA7	0025 thru 4000

All above include adapters to turn "NAMUR 90º"

PART NO.		
3T8-000-32A	Adapter	0025-4000

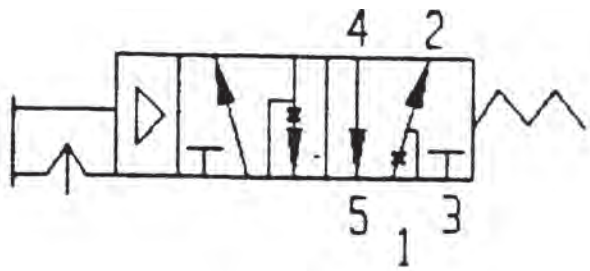

3-WAY N.C.

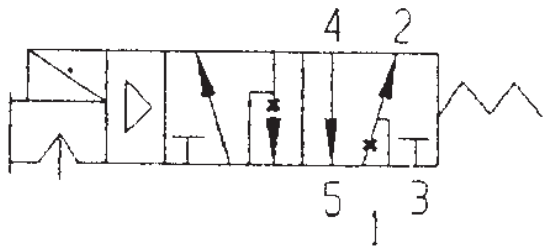

3-WAY N.C.

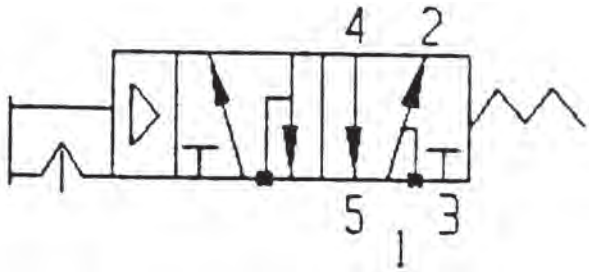

4-WAY OPERATION

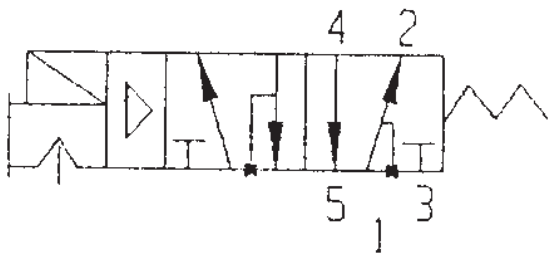

4-WAY OPERATION

LIMIT SWITCHES

STONEL QUARTZ & MONITEUR

The Quartz is available in explosion proof (QX), nonincendive and intrinsically safe (QN) and general purpose (QG) versions. The robust epoxy coated anodized aluminum construction makes this platform extremely durable and well suited for use in corrosive, heavy wash down environments. A broad range of switching, position transmitter and communication options may be selected to accommodate most applications.

This versatile platform adapts to a wide variety of valve systems. Attach the Quartz to quarter-turn actuators, manual operators, linear operators and positioners using readily available stainless steel mounting systems.

ENCLOSURES OPTIMIZED FOR ENVIRONMENT

- QX: Explosion proof, water tight and corrosion-proof enclosure is approved for use in div. 1/zone 1 hazardours areas.
- QN: Nonincendive is approved for all div.2/zone 2 hazardous environments with proximity sensors using a clear cover. Intrinsically safe Namur sensors or passive switches are available for div. 1/zone 0 applications.
- QG: General purpose features a clear Lexan cover with mechanical switches. All enclosures are rated NEMA 4, 4x, and 6.

RAPID ENCLOSURE ACCESS

- Screw-on cover allows quick enclosure access, saving you valuable
- maintenance and set-up time. The cover provides a vapor tight seal and allows entry to internal components in less than five seconds.

FASTER WIRING

- Pre-wired and labeled terminal strip enables quick, convenient attachment of field wires.

WIDE VARIETY OF SWITCHING & COMMUNICATION

- Switching options include dual module sensors and communication, Maxx-Guard proximity switches and mechanical switches. Continuous signal output is available in a 4 to 20 mA position transmitter.

QUICK SET CAMS ARE EASY TO ADJUST

- Touch and Tune switch settings allow you to make adjustments in seconds without the use of tools.

DUAL SHAFT O-RING SEALS ELIMINATE CORROSION

- Top inner and bottom outer shaft o-rings seal the drive bushing from both external corrosives and internal contaminants that enter the enclosure.

SPECIAL DRIVE BUSHING ASSURES LONG CYCLE LIFE

- The oil impregnated bronze bushing maintains smooth operation and eliminates the potential for shaft seizure due to actuator shaft eccentricity.

SPACE SAVING VISUAL INDICATION

- Visual indicator offers excellent view ability without sacrificing accessibility or adding to space requirements. Indicators are also available with continuous percentage or three-way indication.

See Page R-42 for Part Numbering Matrix

Moniteur Limit Switches have been designed to provide the most visible and reliable valve position indication in general purpose, difficult process, and explosion-proof environments. With a wide variety of switches and sensors available to match your application.

FEATURES

- The industry's only "true" visual valve position indicator available for multi-port valves, adjustable to match the actual physical flow pattern of the valve.
- Patented engineered Loc-Ring Cam and Shaft Retention System provides unsurpassed sensing accuracy over the multi-million cycle life of the physical platform.
- Clear Ektar cover offers optimum chemical resistance and strength and is environmentally sealed to prevent fogging and entry of contaminants.
- Indicator is fully adjustable to any valve or actuator.
- Internal switches and terminal block are labeled for easier installation.
- Careful material selection provides a rated life of minimum 1,000,000 cycles.
- Materials of construction selected to excel in high vibration, corrosive, and dirty environments, either indoors or outdoors.
- "Flat cover" version is available without an indicator for areas with tight space requirements.

PART NO.	MODEL NO.	DESCRIPTION
3T-LS3-02	FMYB-5120	NEMA 4/Indicator/2 SPDT Mech.
3T-LS3-06	FFNB-5120	NEMA 4/Flat Cover/2 SPDT Mech.
3T-LS3-01	AMYB-5120	NEMA 7/Indicator/2 SPDT Mech.
3T-LS3-05	AFNB-5120	NEMA 7/Flat Cover/2 SPDT Mech.
3T-LS3-03	AMYB-5220	NEMA 7/Indicator/2 SPDT Prox.
3T-LS3-07	AFNB-5220	NEMA 7/Flat Cover/2 SPDT Prox.
3T-LS3-04	FMYB-5220	NEMA 4/Indicator/2 SPDT Prox.

Part No.	Actuator Size
63-002-12	0012
63-002-13	0025-0350
63-002-14	0600-4000

**Short shaft NAMUR must use kits above.*

aalberts integrated piping systems

LIMIT SWITCHES

HOW TO ORDER - STONEL QUARTZ

Explosion proof Quartz Models (Aluminum Cover)

Series	Sensors/Switches			
QX	Sensor Modules			
	33	SST N.O. Switching Sensor Dual Module		
	Valve Communication Terminals (VCTs)			
	92	DeviceNet VCT		
	93	Foundation Fieldbus		
	96	AS-Interface		
	97	AS-Interface (w/ extended addressing)		
	Mechanical Switches			
	2V	(2) SPDT Mechanical Switches		
	2W	(2) SPDT Gold Contact Mechanical Switches		
	4V	(4) SPDT Mechanical Switches		
	4W	(4) SPDT Gold Contact Mechanical Switches		
	14	(2) DPDT Mechanical Switches		
	5V	Position Transmitter w/ (2) SPDT Mechanical Switches		
	5W	Position Transmitter w/ (2) SPDT Mechanical Switches		
	Expeditors (Proximity Type)			
	82	DeviceNet		
	86	AS-Interface		
	Sensors/Switches			
	Function		Switch/Sensor Type	
	2	(2) Switches	P	SPST Maxx-Guard
	4	(4) Switches	L	SPST Maxx-Guard (LED)
	5	Position Transmitter w/ (2) or No Switches	G	SPDT Maxx-Guard
	7	High Performance Position Transmitter w/ (2) or No Switches	H	SPDT Maxx-Guard
	8	Expeditor, Y or H switches only	S	SPDT Maxx-Guard (LED)
			Y	Expeditor Only (3)
			F	PNP Solid State 3-Wire P&F
			X	SST Sensor (LED)
			O	No Switches

Enclosure		Conduit Entries		Indicator	
E	North American (NEC/CEC)	02	(1) 3/4" NPT &	SRA	Red-Closed / Green-Open
R	International (IEC/ATEX)		(1) 1/2" NPT	SGA	Green-Closed / Red-Open
F	INMETRO	03	(1) 3/4" NPT &	S1A	T1 3-way
S*	Stainless Steel North American (NEC/CEC)		(2) 1/2" NPT	S2A	T2 3-way
T*	Stainless Steel International (IEC/ATEX)	05	(2) M20	S3A	T3 3-way
M*	Stainless Steel INMETRO			S4A	T4 3-way
		06	(3) M20	S5A	T5 3-Way
				S0A	No Indication
*	Available w/ 03 or 06 conduit entry only			SXA	Special
				SCA	Continuous

Nonincendive & Intrinsically Safe Quartz Models (Clear Cover)

Series	Sensors/Switches			
QN	Sensor Modules			
	33	SST N.O. Switching Sensor Dual Module		
	44	Namur Sensors Dual Module I.S.; DIN 19234		
	Valve Communication Terminals (VCTs)			
	92	DeviceNet VCT		
	93	Foundation Fieldbus		
	96	AS-Interface		
	97	AS-Interface (w/ extended addressing)		
	Expeditors (Proximity Type)			
	82	DeviceNet		
	86	AS-Interface		
	Sensors/Switches			
	Function		Switch/Sensor Type	
	2	(2) Switches	P	SPST Maxx-Guard
	4	(4) Switches	L	SPST Maxx-Guard (LED)
	5	Position Transmitter w/ (2) or No Switches	G	SPDT Maxx-Guard
	7	High Performance Position Transmitter w/ (2) or No Switches	H	SPDT Maxx-Guard
	8	Expeditor, Y or H switches only	S	SPDT Maxx-Guard (LED)
			Y	Expeditor Only (3)
			F	PNP Solid State 3-Wire P&F
			X	SST Sensor (LED)
			O	No Switches
			Intrinsically Safe Type	
			J	SPST (Passive)
			M	SPDT (Passive)
			N	P + F Namur Sensors

Enclosure		Conduit Entries		Indicator	
C	North American (NEC/CEC)	02	(1) 3/4" NPT &	SRA	Red-Closed / Green-Open
D	International (IEC/ATEX)		(1) 1/2" NPT	SGA	Green-Closed / Red-Open
		03	(1) 3/4" NPT &	S1A	T1 3-way
			(2) 1/2" NPT	S2A	T2 3-way
		05	(2) M20	S3A	T3 3-way
				S4A	T4 3-way
		06	(3) M20	S5A	T5 3-Way
				S0A	No Indication
				SXA	Special
				SCA	Continuous

General Purpose Quartz Models (Clear Cover)

Series	Function	
QG	Mechanical Switches	
	2V	(2) SPDT Mechanical Switches
	2W	(2) SPDT Gold Contact Mechanical Switches
	4V	(4) SPDT Mechanical Switches
	4W	(4) SPDT Gold Contact Mechanical Switches
	14	(2) DPDT Mechanical Switches

Enclosure		Conduit Entries		Indicator	
C	General Purpose	02	(1) 3/4" NPT &	SRA	Red-Closed / Green-Open
			(1) 1/2" NPT	SGA	Green-Closed / Red-Open
		03	(1) 3/4" NPT &	S1A	T1 3-way
			(2) 1/2" NPT	S2A	T2 3-way
		05	(2) M20	S3A	T3 3-way
				S4A	T4 3-way
		06	(3) M20	S5A	T5 3-Way
				S0A	No Indication
				SXA	Special
				SCA	Continuous

POSITIONERS

VRC

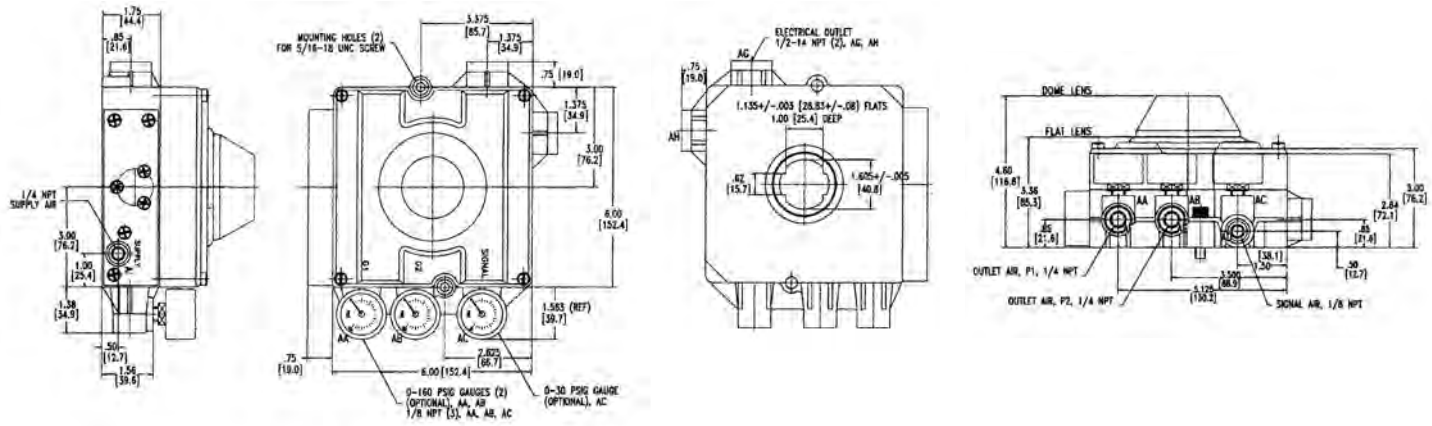

STANDARD MATERIALS LIST

PART	MATERIALS
Enclosure	PPA Composite, 300 Stainless Steel Port Rings, Cover and Mounting Bolts
Indicator Lens	LEXAN™
Internals	PPA, PPS and PEEK Composites 300 Series Stainless Steel
Nickel Plated Brass Spool Valve	Carpenter 70 Grade Stainless Steel
I/P Converter (VK02) VE Model	PPA Composite, TEFLON™ Coated Carbon Steel, Nickel Plated Carbon Steel, High Density Polyethylene DELRIN™
Signal Diaphragm/ O-Rings	BUNA N

PERFORMANCE

PARAMETER	SPECIFICATION
Resolution	1.25% Maximum 0.10% Typical
Repeatability	99.75% Minimum 99.90% Typical
Hysteresis	0.50% Maximum 0.25% Typical
Linearity	1.0% Maximum
Gain @80 psig	250 Single Acting 500 Double Acting
Air Consumption @80 psig	0.25 SCFM – Standard Flow Spool Valve 0.45 SCFM – Maximum Flow Spool Valve
Temp. Range	-40 to 150˚F/-40 to 65˚C

HOW TO ORDER VRC POSITIONERS

PART NUMBER MATRIX

3PV -	0	7	3	0	0
PREFIX	POSITION INDICATOR & TYPE	SPOOL VALVE	PORT GAUGES	POSITION TRANSMITTER	LIMIT SWITCH
3PV	0 - FLAT PNEUMATIC	7 - STANDARD FLOW	3 - NO GAUGES	0 - NO TRANSMITTER	0 - NO SWITCH
	1 - FLAT ELECTRO-PNEUMATIC	8 - MAX FLOW	4 - BRASS GAUGES	F - 4-20MA CURRENT	K - MECHANICAL SWITCH
	5 - DOME PNEUMATIC		5 - SS GAUGES	OUTPUT 2-WIRE	M - PROXIMITY SWITCH
	6 - DOME ELECTRO-PNEUMATIC				

POSITIONERS

PMV

Simple design makes this product easy to understand, calibrate and repair. Rugged construction provides operation in a variety of tough applications. Compact size minimizes space requirements. A complete package means the user can select the right positioner for his application.

A bright indicator makes it easy for operators to visually check valve position. Spool valve design requires very little maintenance. Electro-pneumatic unit eliminates the need for an extra product and additional connections. Recognized product name means a proven product with many years of service.

Valve positioners are an excellent tool for increasing the gain of your valve package, often reducing your actuator size due to your increased ability to accurately control higher air deliveries, and the flexibility to add options and accessories to complete your control package's performance.

Our standard positioners include both pneumatic and electropneumatic positioners. Electropneumatic Positioners may be used on either double acting or spring return actuators. The anodized aluminum housing provides excellent product integrity and good corrosion resistance. Options including special coatings, stainless steel housings, and a variety of accessory items which provide the flexibility to meet your most demanding control applications.

PART NUMBERS

APOLLO PART #'S	PMV MODEL #'S	DESCRIPTION
3T-200-01	P-2000	Double Acting, Electro-Pneumatic, 1
3T-202-01	P-2020	Double Acting, Electro-Pneumatic, 2
3T-500-01	P5	Double Acting, Hi Capacity & Gain
3T-250-01	EP5	Electro Pneumatic, Hi Capacity & Gain
3T-250-02	EP5-EX	Double Acting, Hi Capacity & Gain, Explosion Proof

1. Normal Capacity
2. High Capacity
3. ccessories such as pressure gauges, limit switches, transmitters, and potentiometers are available. Please consult the factory for pricing.

PMV MOUNTING KITS FOR APOLLO ACTUATORS

ACTUATOR SIZE	MOUNTING KIT	MATERIAL
AD/AS 0012	63-002-01	Stainless Steel
AD/AS 0025-0350	63-001-89	Stainless Steel
AD/AS 0600-4000	63-001-91	Stainless Steel

PRODUCT SPECIFICATIONS

	P2000/20	P5/EP5*
Connections:	1/4"	1/4"
Supply Pressure:	120 psig	145 psig
Hysteresis:	0.5%	0.5%
Linearity:	2.0%	0.5%
Repeatability:	0.5%	0.5%
Sensitivity:	0.5%	0.25%
Input Signal:	4-20 mA	3-15, 4-20mA
Temperature - Standard:	+5 - 175˚F	+5 - 185˚F
Temperature - Optional:	+5 - 230˚F	+5 - 230˚F
Weight:	5.9 lbs.	2.9/4.1 lbs.
Air Consumption @ 85 psig:	35/.71 scfm----------.75 scfm	
Air Delivery @ 57 psig:	12/15.7 scfm	12.6 scfm
Gain Factor:	50/400	10,000

**PMV New Modular Unit P5-Pneumatic; EP5 Electropneumatic*

POSITION MONITORING SYSTEMS

PROXIMITY VALVE POSITION

VALVE POSITION MONITORING SYSTEMS

Proximity Controls' flexible Valve Position Monitoring Systems give users the ability to reliably monitor both manual and actuated valves. The durable position monitoring system features mounting hardware available in zinc plated steel, stainless steel, and Namur standards for all Proximity indicator models.

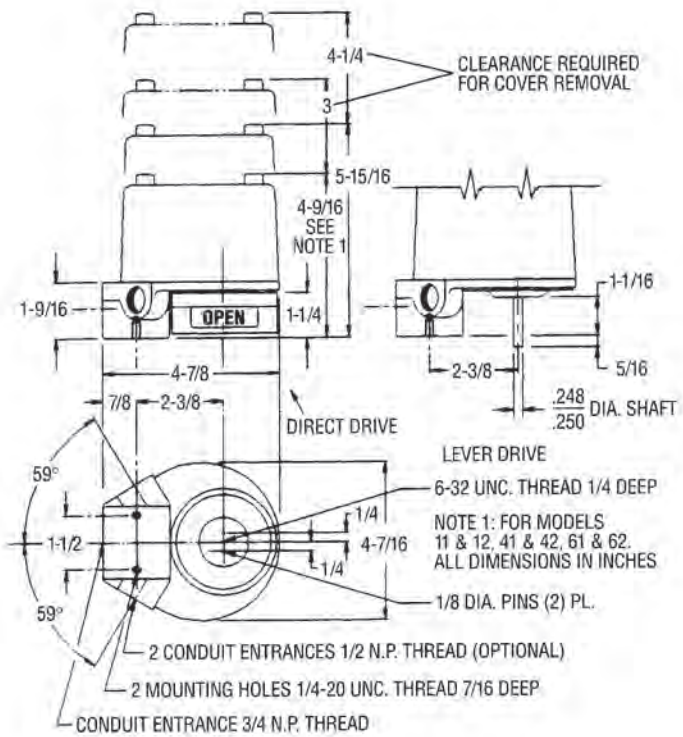

PROXIMITY MODEL #	NEMA	MODEL DESCRIPTION	SWITCH/TRANSMITTER SPECIFICATIONS
42ADM	4,4X	2 SPDT MECH, Clear Plastic Cover	15 amps ac, 5 amps dc
42AD0	4,4X,7,9	2 SPDT MECH, Anodized Aluminum Housing	15 amps ac, 5 amps dc
42DD0	4,4X,7,9	2 DPDT MECH, Anodized Aluminum Housing	10 amps ac, 10 amps dc
42RD0	4,4X,7,9	2 SPDT PROX, Herm Sealed Reed, Anodized Al.	3 amps ac, 2 amps dc
42VD0J1	4,4X,7,9	2 SPDT MECH, 3/4" & 1/2" NPT Entry, Anodized Al.	10 amps ac, 10 amps dc
42RD0J1	4,4X,7,9	2 SPDT PROX, 3/4" & 1/2" NPT Entry, Anodized Al.	3 amps ac, 2 amps dc
44AD0	4,4X,7,9	4 SPDT MECH, Anodized Aluminum Housing	15 amps ac, 5 amps dc
45VD0	4,4X,7,9	2 SPDT MECH, & Transmitter, Anodized Aluminum	10 amps / 4-20 mA out
45RD0	4,4X,7,9	2 SPDT PROX, & Transmitter, Anodized Aluminum	3 amps / 4-20 mA out
62PD0	4,4X,7,9	2 SPST PROX, Anodized Aluminum Housing	Herm Sealed Reed (mA)
62QD0	4,4X,7,9	2 SPDT PROX, Anodized Aluminum Housing	Herm Sealed Reed (mA)
35OD0*	Mag Coupling	MULTI-TURN Transmitter, Anodized Aluminum	No Switch / 4-20 mA
12AD0**	Mag Coupling	2 SPDT MECH, Anodized Aluminum Housing	15 amps ac, 5 amps dc
15VD0	Mag Coupling	2 SPDT MECH, & Transmitter, Anodized Aluminum	10 amps / 4-20 mA out
12VD0J1	Mag Coupling	2 SPDT MECH, 3/4" & 1/2" NPT Entry, Anodized Al.	10 amps ac, 10 amps dc
12AD6	Mag Coupling - ST STL	2 SPDT MECH, 304 Stainless Steel Housing	15 amps ac, 5 amps dc
15VD6	Mag Coupling - ST STL	2 SPDT MECH, & Transmitter, 304 Stainless Steel	10 amps / 4-20 mA out

**No Visual Indicator Mag (Magnetic) Coupling - Maximum hazard protection and submersible. Prox (Proximity) sensors are all Herm (Hermetically) Sealed Reeds. Anodized aluminum housing is standard. 316 Stainless Steel is optional.*
*** Apollo maintains the 12ADO in stock, Apollo part number with indicator M116100 and without indicator M105900.*

When ordering, please specify requirements for explosion proof certifications (US, CSA OR CENELEC), or Intrinsic Safety. Standard temperature (180°F) switches are available. White epoxy is optional. When you need a junction package, specify your solenoid valve requirement(s). For factory sealed lead orders, please specify number of leads and desired length (36" standard). Let us know if you need special cables or connectors, and specify your mounting hardware requirements.

LOCKOUT DEVICE

OSHA

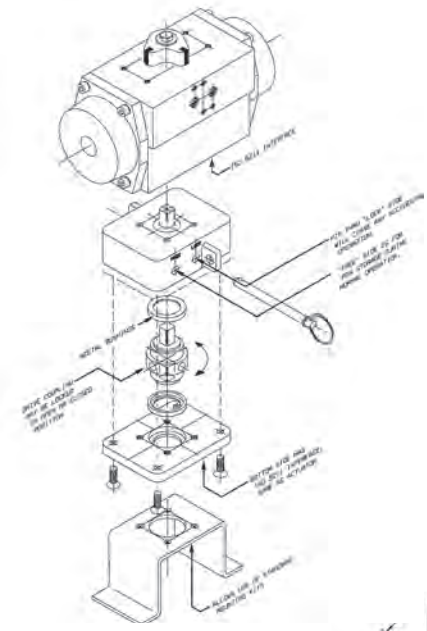

The Apollo Lockout Tagout accessory for actuators complies with OSHA 1910.147 guidelines. It insures complete lockout capability in both the fully open or the fully closed position. Its design prevents accidental or malicious tampering of an automated valve's orientation.

The housing is constructed in investment cast 316SS, the fasteners, the lock pin, and the coupling are made of 300 Series stainless steel. This rugged construction, plus two acetal bushings located above and below the coupling, assures the strength and support necessary to withstand the torque and torsion generated by the actuator mounted above.

The top and bottom of the housing feature ISO 5211 mounting patterns. This design allows the accessory to be fitted between existing actuators and stainless steel bracketry that also comply with the ISO 5211 standard.

Available in six sizes, it is the perfect compliment to the Apollo Rack and Pinion Actuator and Apollo Ball Valve. The design results in a safe automated package that will satisfy the concerns of the most discriminating safety engineer.

The lockout device may be used with electric actuators. However, caution should be exercised due to the possibility of motor burnout in an energized and locked position.

DIMENSIONS

DIMENSION	3TL3000	3TL4000	3TL5060	3TL6570	3TL8000	3TL9000
A	4.00	4.00	6.00	6.00	8.00	8.00
B	3.00	3.00	4.25	4.25	6.00	6.00
C	2.25	2.25	3.12	3.12	4.25	4.25
D	1.75	1.75	2.37	2.37	3.50	3.50
E	0.06	0.06	0.10	0.10	0.18	0.18
F	2.00	2.00	3.00	3.00	4.00	4.00
G	0.50	0.70	0.87	0.87	1.38	1.38
H	1.02	1.02	1.75	1.75	2.50	2.50
I	0.62	0.70	1.17	1.17	2.00	2.00
J(RAD.)	0.37	0.37	0.50	0.50	0.75	0.75
K	0.96	0.96	1.50	1.50	2.50	2.50
L1	0.265	0.265	0.328	0.328	0.515	0.640
L2	NA	NA	0.390	0.390	NA	NA
UNC1	1/4-20UNC	1/4-20UNC	5/16-18UNC	5/16-18UNC	1/2-20UNC	5/8-11UNC
UNC2	NA	NA	0.390	0.390	NA	NA
M1 B.C.	1.970 (F05)	1.970 (F05)	2.756 (F07)*	2.756 (F07)	4.920 (F12)	5.510 (F14)
M2 B.C.	NA	NA	4.016 (F10)	4.016 (F10)*	NA	NA
XT (MAX.)	0.540	0.690	0.955	1.080	1.325	1.780
XB (MIN.)	0.551	0.710	0.985	1.105	1.420	1.890
CT	.430/.432	.547/.550	.744/.747	.862/.865	1.056/1.059	1.413/1.416
CB	.433/.435	.551/.553	.748/.750	.866/.868	1.060/1.063	1.419/1.422
WEIGHT	3.65	3.75	9.90	10.40	28.90	29.50

**F Patterns Designated are Standard Mounting Arrangement*

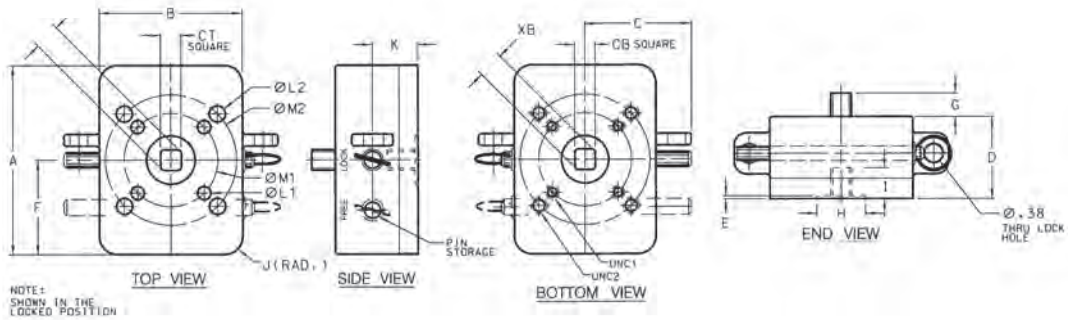

BALL VALVES

GENERAL ACTUATION INFORMATION

VALVE MOUNTING

Mounting of Apollo actuators to quarter turn valves is a straight forward task. Conbraco provides stainless steel brackets and couplings that are precision made to fit each of its Apollo valve and actuator combinations. The simplicity of valve mounting hardware is deceptive and may cause carelessness in the assembly operation.

CAUTION

It is mandatory that the actuator to valve mounting procedure be performed by personnel that have been properly trained and informed of the importance of this assembly operation.

Apollo's brackets and couplings have been engineered to have the required strength and precision fit to insure reliable valve operation. Each mounting kit has all the required components to mate specific valves and actuators (refer to the mounting kit selection guide).

CAUTION

Brackets and couplings of lesser quality can expose the stem of the valve to side loads that will ultimately cause premature stem leakage. It is essential that the actuator to valve mounting be treated as a critical assembly operation. All brackets and couplings must be properly aligned prior to tightening the attachment bolts. The assembly should undergo an operational test to insure that there is no binding during operation. There must be no discernible flexing of the bracket. If either is noted corrective action must be taken before the assembly is considered acceptable for use.

ALL AUTOMATED VALVES must undergo an operational test to insure that both the valve and actuator function properly. The valve must be properly aligned in both the open and closed positions. Spring return actuators must perform their intended safety function such as: fail closed, fail open. Modulating actuators should operate the valve in the correct direction in response to the required instrument signal.

BALL VALVE TORQUE

Before an actuator can be selected, the in-service torque requirement of the valve must be determined. The in-service valve torque is influenced by many factors. Packing and seating materials are fundamental to the construction of the valve and therefore establish the basic required torque. Service conditions which include differential pressure, frequency of operation and flow media also have a significant effect on the valve's in-service torque. Refer to the Torque Constants Chart for valve torque requirements under defined conditions. The torque required to operate a ball valve is the result of friction between the moving and stationary components of the valve. The stem to packing friction and the ball to seat friction combine to establish the minimum torque requirement. Conbraco recommends the use of a stainless steel ball and stem on automated valves.

LONG STAND STILL TORQUE (LSST)

Common to soft seated ball valves is the phenomena of Long Stand Still Torque (LSST). For floating ball valves, LSST is typically twice the normal rated torque. The phenomena occurs when a valve remains idle for an extended period of time, typically a month or more, but the time period can vary by application. Even if "normal" operation is daily or even more frequent, if the valve sits idle LSST still need to be taken into account when sizing an actuator. Once the valve has been operated a couple of times, the operating torque returns to normal levels.

BALL & SEAT

Valve torque is primarily dependent on the friction between the moving ball and the stationary seat. Seating material and surface finish of the ball establish the basic frictional characteristics of the combination. Service conditions also play a major roll in modifying the effects of friction. A floating ball valve utilizes the difference between the upstream and downstream pressures to force the ball into the downstream seat. When this force exceeds the forces in the original assembly, the torque required to rotate the ball increases. Process media may also increase or decrease the friction between the ball and seat. To insure reliable actuator selection, the service conditions of the installed valve must be carefully determined and considered for their effect on torque.

STEM & PACKING

Stem torque is primarily dependent on the frictional characteristics of the packing material and the tightness of the packing adjustment. Proper adjustment of the packing is important not only to the leak tight performance of the valve but also minimizes the operating torque. Tightening the packing more than is required to establish a proper seal, only increases torque requirements and stem wear. Packing adjustment can be abused to the point that a properly selected actuator may not be able to operate the valve. Stem packing friction is essentially unaffected by the media and operating pressures within the valve.

-24/-29 GRAPHITE STEM PACKING ADDER

The selection of graphite packing contributes significantly to the operating torque of a valve. The friction factor for graphite is a magnitude different than that of PTFE based packings. The contribution to torque is a function of the stem diameter and is reflected in each of the following tables. When selecting either the -24, -29 or -65 options use the appropriate adder listed in the table for each valve as a direct increase to the base torque constant.

BREAKWAY TORQUE

Torque required to initiate the opening of a valve from the fully closed position. This is the highest torque requirement anywhere within the Apollo Ball Valve's rotation. The Torque Constants Chart lists breakaway torques for Apollo valves under defined operation conditions.
Note: For double acting actuators, the torque output at the given air supply pressure must exceed the breakaway torque of the valve.

CLOSING TORQUE

Torque required to rotate the valve from the open position, into the fully closed position. A conservative approach is taken when determining closing torque because operating conditions have a significant effect on its value. It is safest to assume that closing torque is equal to breakaway torque. In actual service conditions the closing torque may be less, but this margin is used as a sizing safety factor.

GUIDELINES FOR DETERMINING IN-SERVICE VALVE TORQUE

Actual service conditions must be considered when determining a valve's required torque. Torque Adjustment Factors have been established to convert the Torque Constant value to an in-service torque. Multiple Torque Adjustment Factors may be required to establish the proper in-service torque requirement. All valve torque determinations begin with the Torque Constant value at the appropriate differential pressure. Adjustment factors must be used to determine the in-service valve torque requirement (see page 52, Torque Adjustment Factors Chart). Each applicable adjustment factor is applied to the value from the Torque Constants chart. The sum of all appropriate adjustments of the valve's torque are added to the original value from the Torque Constants chart. The result is the in-service torque requirement. This torque value is to be used in actuator selection.

Note: For fail closed applications, the closing torque must be exceeded by the "spring end" force of the actuator. For fail open applications, the closing torque must be exceeded by the "air end" (at the given supply pressure) force of the actuator.

TORQUE CONSTANTS FOR APOLLO END ENTRY VALVE (1), (2)

TORQUE CONSTANT (IN-LB) AT DIFFERENTIAL PRESSURE INDICATED (PSIG)									
DIFFERENTIAL PRESSURE (PSIG)		200	400	600	800	1000	1500	LSST***	-24 ADDER
VALVE MODEL	SIZE							(IN.-LB)	(IN.-LB)
STANDARD PORT 70-64x 71-14x 76-10x 76-60x 89-14x 399-10x	1/4 - 1/2	35	35	40	43	46	48	70	45
	3/4	50	50	54	59	62	64	100	45
	1	101	101	103	106	116	130	202	56
	1-1/4	171	171	205	216	246	286	342	96
	1-1/2	192	192	216	265	280	311	384	96
	2	271	271	276	300	309	354	542	96
	2-1/2 & 3	540	700	820	920	1030		1000	96
FULL PORT BRONZE 77-14x	1/4 - 1/2	35	35	40				70	45
	3/4	74	74	84				148	56
	1	234	234	250				468	56
	1-1/4	286	286	321				552	56
	1-1/2	357	357	398				714	96
	2	650	650	722				1300	96
	2-1/2 & 3	715	715	790				1430	111
FULL PORT BRONZE 77D-14X	1/2	25	25	25	25			50	
	3/4	55	55	55	55			110	
	1	87	87	87	87			174	
	1-1/2	120	120	120	120			240	
	2	280	280	280	280			560	
**STANDARD PORT **71-ARX-64 89-ARX-64 76-ARX-64	1/4 - 1/2	26	27	28	30	32	35	50	45
	3/4	50	52	54	57	60	64	100	45
	1	86	88	90	94	97	110	170	56
	1-1/4	140	145	156	160	172	194	280	96
	1-1/2	164	173	186	195	201	235	320	96
	2	230	258	270	310	350	460	440	96
	2-1/2	495	576	680	790	900		900	96
	3	540	700	820	920	1030		1000	96
*FULL PORT **77-ARX-64	1/4 - 1/2	50	52	54				100	45
	3/4	86	88	90				170	56
	1	148	160	180				280	56
	1-1/2	300	310	340				580	96
	2	355	420	563				680	96
FULL PORT 3-PIECE 82-14X & 24X	1/4 - 1/2	78	78	90				156	56
	3/4	156	156	178				312	56
	1	208	208	230				416	96
	1-1/4	234	234	276				468	96
	1-1/2	350	350	390				700	96
	2	715	715	755				1430	96
	3	710						1100	292
	4	1052						1540	292
FULL PORT 3-PIECE 83A-14X & 24X 83B-14X & 24X 86A-10X & 20X 86B-10X & 20X	1/4 - 1/2	38	39	41	42	43	49	75	45
	3/4	61	62	63	63	67	79	121	68
	1	97	104	110	117	124	141	180	68
	1-1/4	182	198	213	228	243	281	335	96
	1-1/2	182	198	213	228	243	281	335	96
	2	275	388	402	466	529	688	422	127
FULL PORT 3-PIECE 83R-108-01 & 83R-100-01 86R-108-01 & 86R-100-01	2	715	715	755	800	912	1024	1430	96
	3	1030	1030	1087	1148	1212		2060	201

** Torques tested with multifilled seats. Does not require torque adjustment of -20%.*
*** 71-ARX-64 and 77-ARX-64 rated to 600 psig maximum.*
**** LSST - Long Stand Still Torque*

Note 1:
Constants are used to determine the in-service torque requirements of Apollo Valves.
Note 2:
Constants are based on RPTFE seats, and clean dry air at the stated differential pressure.

REV. 13APR17

BALL VALVES

TORQUE CONSTANTS

TORQUE CONSTANTS FOR APOLLO PEEK SEATED 83B/86B WITH GRAPHITE STEM PACKING

TORQUE CONSTANT (IN-LB) AT DIFFERENTIAL PRESSURE (PSIG) INDICATED										
DIFFERENTIAL PRESSURE (PSIG):		200	400	600	800	1000	1200	1400	1500	LSST
VALVE MODEL	SIZE									(IN.-LB)
FULL PORT 3-PIECE 83B/86B	1/4 - 1/2	75	80	86	91	98	105	111	118	112
	3/4	130	150	170	177	185	194	204	210	195
	1	250	263	276	289	302	315	328	345	375
	1-1/4	420	463	506	549	592	635	678	720	630
	1-1/2	420	463	506	549	592	635	678	720	630
	2	840	922	1004	1086	1168	1250	1332	1410	1260

Caution: 2" PEEK seated valves operating at pressures higher than 1000 psig. should be automated or have a gear operator installed. Lever operation is not suggested. All values are stated in (in. lb.)

TORQUE CONSTANTS FOR APOLLO FLANGED BALL VALVES

VALVE SERIES	SIZE	WORKING PRESSURE (PSIG)									LSST	-24 ADDER	-EF ADDER
		0	100	200	300	400	500	600	700	740	(IN.-LB)	(IN.-LB)	(IN.-LB)
87A-100s 88A-140s 87B-100s 88B-100s	1-1/2" SP 150	132	144	155	167						264	68	68
	2" SP 150	176	193	211	228						352	96	96
	2-1/2" SP 150	231	254	277	300						462	127	127
	3" SP 150	253	327	402	476						506	127	127
	4" SP 150	850	860	875	890						1700	292	292
	6" SP 150	1325	1345	1370	1400						2650	292	292
	8" SP 150	2200	2494	2788	3081						4400	661	895
	10" SP 150	3300	3580	3860	4140						6600	661	895
87A-200s 88A-240s	1/2" FP 150	22	22	22	22						44	45	45
	3/4" FP 150	39	43	47	51						77	68	68
	1" FP 150	132	144	155	167						264	68	68
	1-1/2" FP 150	176	193	211	228						352	96	96
	2" FP 150	231	254	277	300						462	127	127
	2-1/2" FP 150	253	327	402	476						506	127	127
	3" FP 150	850	860	875	890						1700	292	292
	4" FP 150	1325	1345	1370	1400						2650	292	292
	6" FP 150	2200	2494	2788	3081						4400	661	895
	8" FP 150	3300	3580	3860	4140						6600	661	895
	10" FP 150	4400	5059	5718	6377						8800	988	1625
	12" FP 150	4950	8300	11650	15000						9900	988	1625
87A-700s 88A-740s	1-1/2" SP 300	132	144	155	167	178	190	201	213	217	264	68	68
	2" SP 300	176	193	211	228	245	262	280	297	304	352	96	96
	2-1/2" SP 300	231	254	277	300	323	346	369	392	401	462	127	127
	3" SP 300	253	327	402	476	551	625	700	774	804	506	127	127
	4" SP 300	850	860	875	890	910	950	1030	1110	1142	1700	292	292
	6" SP 300	1325	1345	1370	1400	1430	1474	1615	1756	1812	2650	292	292
	8" SP 300	2200	2494	2788	3081	3375	3669	3963	4257	4374	4400	661	895
	10" SP 300	3300	3580	3860	4140	4420	4700	4980	5260	5372	6600	661	895
87A-900s 88A-940s	1/2" FP 300	22	22	22	22	23	23	23	23	23	44	45	45
	3/4" FP 300	39	43	47	51	55	59	63	67	69	77	68	68
	1" FP 300	132	144	155	167	178	190	201	213	217	264	68	68
	1-1/2" FP 300	176	193	211	228	245	262	280	297	304	352	96	96
	2" FP 300	231	254	277	300	323	346	369	392	401	462	127	127
	2-1/2" FP 300	253	327	402	476	551	625	700	774	804	506	127	127
	3" FP 300	850	860	875	890	910	950	1030	1110	1142	1700	292	292
	4" FP 300	1325	1345	1370	1400	1430	1474	1615	1756	1812	2650	292	292
	6" FP 300	2200	2494	2788	3081	3375	3669	3963	4257	4374	4400	661	895
	8" FP 300	3300	3580	3860	4140	4420	4700	4980	5260	5372	6600	661	895
	10" FP 300	4400	5059	5718	6377	7036	7696	8355	9014	9277	8800	988	1625
	12" FP 300	4950	8300	11650	15000	18349	21699	25049	28399	29739	9900	988	1625

FLANGED VALVES

TORQUE CONSTANTS

TORQUE CONSTANTS FOR APOLLO CLASS 600 FULL PORT FLANGED VALVES

SEAT MATERIAL	SIZE	WORKING PRESSURE (PSIG)								LSST*	-24 ADDER	-EF ADDER
		200	400	600	800	1000	1200	1400	1500			
Devlon V-API (-95)	1"	166	189	211	233	256	275	292	300	288	N/A	N/A
	1.5"	253	273	292	312	331	351	370	380	468	N/A	N/A
	2"	686	698	710	721	732	744	755	761	1350	N/A	N/A
	2.5"	1150	1190	1231	1272	1313	1353	1395	1415	2256	N/A	N/A
	3"	1893	2030	2167	2304	2440	2577	2714	2782	3512	N/A	N/A
	4"	2406	2681	2957	3232	3508	3784	4060	4197	4260	N/A	N/A
	6"	7935	8280	8625	8970	9135	9660	10005	10178	13638	N/A	N/A
	8"	8282	8868	9454	10041	10627	11213	11799	12092	15978	N/A	N/A
PEEK (-38)	1"	184	204	224	245	264	283	304	314	328	N/A	N/A
	1.5"	379	399	420	439	460	479	500	509	468	N/A	N/A
	2"	882	968	1054	1140	1225	1313	1399	1481	1323	N/A	N/A
	2.5"	1256	1320	1384	1448	1512	1576	1640	1672	2384	N/A	N/A
	3"	2378	2588	2797	3007	3217	3427	3637	3741	4336	N/A	N/A
	4"	5771	6832	7892	8952	10012	11073	12133	12663	9422	N/A	N/A
	6"	6983	8675	10368	12061	13753	15446	17139	17985	10580	N/A	N/A
	8"	8586	12822	17058	21294	25531	29767	34003	36121	12936	N/A	N/A
UHMWPE (-21)	1"	155	178	201	219	222	224	228	228	264	N/A	N/A
	1.5"	211	245	280	305	310	315	318	318	352	N/A	N/A
	2"	428	454	479	505	531	556	582	594	806	N/A	N/A
	2.5"	447	467	486	506	525				875	N/A	N/A
	3"	1139	1224	1310	1396	1482				2106	N/A	N/A
	4"	1506	1638	1820	2002	2184				2600	N/A	N/A
	6"	3133	3487	3842						5558	N/A	N/A
	8"	3814	4354	4894						7088	N/A	N/A
Multiseal (-80)	1"	155	180	205	222	227	231	233	234	264	102	102
	1.5"	213	245	280	308	316	322	326	326	354	144	144
	2"	313	356	400	444	487	531	575	597	538	191	191
	2.5"	410	437	465	493	520				791	191	191
	3"	875	890	1030	1151	1228				1112	292	292
	4"	1506	1584	1683	1781	1880				2776	292	292
	6"	2788	3375	3963						4824	661	895
	8"	4836	5175	5514						8993	988	1625

Caution: For torque constants in the highlighted areas, manual valve operation is not suggested. Automated and gear operated assembly options are available. All values are stated in (in-lb)

REV. 04MAY17

BALL VALVES

TORQUE CONSTANTS

BALL VALVE TORQUE ADJUSTMENT FACTORS

PROVISION	CONDITION	FACTOR
TYPE OF OPERATION	ON/OFF SERVICE	0
	MODULATING SERVICE	0.25
PROCESS MEDIA	LIQUID, CLEAN PARTICLE FREE	0
	LIQUID, DIRTY, SLURRY, RAW WATER	0.3 to 0.8
	LIQUID, BLACK LIQUOR, LIME SLURRY	0.8
	LIQUID, OIL, LUBRICATING	0
	LIQUID, VISCOUS, MOLASSES	0.3
	GAS, CLEAN & WET	0
	GAS, DRY	0.3 to 0.5
	GAS, DIRTY, AIR SLURRY, NATURAL GAS	0.5 to 1
	OXYGEN, CHLORINE	0.5
	SUPERHEATED STEAM, SATURATED STEAM	Refer to Process Temp.
FREQUENCY OF OPERATION**	ONCE PER DAY OR MORE	0
	ONCE PER WEEK	0.2
	ONCE PER MONTH	0.5
	Less than once per month (LSST)	1
PROCESS TEMPERATURE	APPLICATIONS ABOVE 225 DEG F	0.50
	APPLICATIONS BELOW -20 DEG F	0.25
VALVE SEATING MATERIAL	PTFE	0
	*MULTIFILL	0
	*PEEK	Contact Factory
	*UHMWPE	Contact Factory
OPTION -49 -57 -67 -90	LIVE LOADED VALVES	0.2
	ASSEMBLED DRY	0.3
	OXYGEN CLEANED	0.3
	CLEANED FOR INDUSTRIAL GAS	0.3
	DOUBLE PACKED EXTENDED BONNET	0.2
CUSTOMER SPECIFIED	PRESCRIBED SAFETY FACTOR	0.2 to 2

**Do not consider when calculating Top Entry Valve Torques. Apply all applicable torque adjustment factors to the valve*
*** If accounting for LSST, disregard frequency of operation.*

Example:
To find adjusted torque:
1" 76-AR5-64 used on Oxygen service once per week to once per month. Find the torque constant of the valve at 200 psig DP, then add together the adjustment factors, and add 1 to that number. Then multiply the sum of the adjustment times the torque.
86" lb x (.5 + .5 + 1) = 172" lb. adjusted torque.

TORQUE CONSTANTS FOR TOP ENTRY BALL VALVES

SEATS	VALVE SIZE STD. PORT (INCHES)	VALVE SIZE FULL PORT (INCHES)	DIFFERENTIAL PRESSURES (PSIG)					LSST*	GRAFOIL® ADDER	-EF ADDER
			100	285	500	740	1480			
5 6** C D G L M U**	1/2 thru 1	1/2 thru 3/4	85	110	140	180	290	170	68	68
	1-1/2	1	205	260	330	415	660	410	96	96
	2	1-1/2	350	430	550	735	1,200	700	127	127
	3	2	950	1,250	1,650	2,000	3,200	1,900	292	292
	4	3	2,000	2,500	3,300	4,100	6,500	4,000	292	292
	6††	4††	5,300	6,700	8,200	11,400	18,000	10,600	661	895
	8††	6††	11,000	14,000	18,500	25,000	36,000	22,000	661	895
	10††	8††	18,500	22,000	30,000	40,000	62,000	37,000	988	1625
4 8 9 B H N	1/2 thru 1	1/2 thru 3/4	115	160	210	260	450	230	68	68
	1-1/2	1	270	370	480	590	1,000	540	96	96
	2	1-1/2	475	650	860	1,050	1,750	950	127	127
	3	2	1,250	1,850	2,400	2,950	4,900	2,500	292	292
	4††	3††	2,700	3,700	4,900	5,900	10,000	5,400	292	292
	6††	4††	7,410	10,100	13,400	16,400	25,300	14,800	661	895
	8††	6††	15,000	20,000	26,000	34,500	56,000	30,000	661	895
	10††	8††	25,000	32,000	45,000	60,000	96,000	50,000	988	1625

**LSST - Long Stand Still Torque*
***Rated torque for #6 and U seat add 30%*
†Rated torque for #9 ceramic seat is to be increased by 10%
††Gear operator or actuation recommended

REV. 04MAY17

BUTTERFLY VALVES

TORQUE CONSTANTS

BUTTERFLY VALVE ACTUATOR SIZING PROCEDURES

DOUBLE ACTING ACTUATOR:

AIR TO OPEN, AIR TO CLOSE

- Choose an actuator whose output torque at the given air supply is greater than the butterfly valve's seating/unseating torque.
- Unseating torque is also known as the breakaway torque
- Seating torque is also known as the closing torque

SPRING RETURN FAIL CLOSED:

AIR TO OPEN, SPRING TO CLOSE

- Select an actuator whose ending spring stroke is greater than the butterfly valve's seating/unseating torque.
- Select an actuator whose starting air stroke is greater than the butterfly valve's seating/unseating torque at the given air supply pressure.
- Above must be found on the same spring set line.

SPRING RETURN FAIL OPEN:

AIR TO CLOSE SPRING TO OPEN

- Select an actuator whose end of air stroke is greater than the butterfly valve's seating/unseating torque at the given air supply pressure.
- Select an actuator whose start of spring stroke is greater than the butterfly valve's seating/unseating torque.
- Above must be found on the same spring set line. See Actuator Part Numbering System-"F" Suffix for Fail Open

FACTORS AFFECTING SEATING AND UNSEATING TORQUE AND APPLICATION GUIDELINES

OPERATING FREQUENCY

- The first operation of a valve after a sustained period of closure will require above normal torque.

LUBRICATING CHARACTERISTICS OF FLOW MEDIA

- Judge your flow media on this basis-better than or worse than water. Examples of lubricating media are: water, lubricating oils, aqueous process flow, beverage service, etc. Examples of non-lubricating media are: air, dry gases, dry bulk services, solvents, diesel oil, etc.

CONDITION OF DISC EDGE AND SEAT

- An iron disc in corrosive service will corrode. This corrosion deposits a build-up on the disk edge and raises required torque. Similar flow media deposits on the seat material can increase torque or prevent proper valve operation.

TEMPERATURE EXTREMES

- Sustained operating temperatures approaching the upper or lower limits of the seat material will increase required torque. Refer to the seat temperature range on Apollo Butterfly Valve Seat Materials page in the catalog. Consult the factory for anticipated torque increase of certain seat materials due to temperature extremes.

ELASTOMER SWELL

- Certain elastomers tend to swell from contact with some chemicals. This elastomer swell will increase required torque.

The wide selection of Apollo Available Materials of Construction will allow you to choose the correct butterfly valve materials for your service. All of the above Torque Affecting Factors can be accommodated with the correct choice of materials. Consult the factory for assistance in choosing the correct torque value for your service.

NOTE: Please consult the material selection guide for trim recommendations. Please consult the factory for proper sizing of Apollo actuators.

BUTTERFLY VALVES

TORQUE CONSTANTS

RTFM & UHMWPE SEAT – TORQUE RATING (IN-LB)

SIZE	PSIG	CLASS 150				CLASS 300					CLASS 600					
		ΔP=100	ΔP=150	ΔP=200	ΔP=285	ΔP=100	ΔP=150	ΔP=200	ΔP=285	ΔP=740	ΔP=150	ΔP=500	ΔP=800	ΔP=1000	ΔP=1200	ΔP=1480
2″	in-lb	204	230	266	332	248	332	381	425	531	–	–	–	–	–	–
2.5″	in-lb	239	283	319	398	301	398	443	478	575	–	–	–	–	–	–
3″	in-lb	257	301	345	434	327	434	487	540	664	407	513	841	974	1,106	1,283
4″	in-lb	398	469	531	664	469	664	761	867	1,106	620	841	1,540	1,823	2,106	2,487
5″	in-lb	558	655	743	929	620	885	1,062	1,239	1,664	–	–	–	–	–	–
6″	in-lb	726	850	974	1,212	858	1,221	1,505	1,779	2,460	974	1,363	2,593	3,089	3,575	4,248
8″	in-lb	1,328	1,549	1,770	2,213	1,646	2,354	2,921	3,487	4,868	1,912	2,673	5,080	6,045	7,009	8,319
10″	in-lb	2,213	2,575	2,947	3,682	2,575	3,682	4,691	5,699	8,142	3,177	4,437	8,434	10,036	11,638	13,806
12″	in-lb	2,867	3,345	3,823	4,779	3,629	5,177	6,522	7,877	11,151	4,788	6,682	12,709	15,116	17,523	20,798
14″	in-lb	4,938	5,761	6,584	8,231	6,053	8,646	11,186	13,735	19,913	–	–	–	–	–	–
16″	in-lb	6,903	8,054	9,204	11,505	8,461	12,080	14,788	17,496	24,072	–	–	–	–	–	–
18″	in-lb	9,717	11,337	12,956	16,196	11,903	17,010	20,461	23,913	32,303	–	–	–	–	–	–
20″	in-lb	12,930	15,089	17,240	21,550	15,842	22,629	26,816	30,993	41,153	–	–	–	–	–	–
24″	in-lb	19,859	23,169	26,479	33,099	24,329	34,754	40,595	46,436	60,623	–	–	–	–	–	–
30″	in-lb	30,090	35,400	40,710	49,472	–	–	–	–	–	–	–	–	–	–	–
36″	in-lb	48,233	58,145	68,057	84,849	–	–	–	–	–	–	–	–	–	–	–

FIRE SAFE SEAT – TORQUE RATING (IN-LB)

SIZE	PSIG	CLASS 150				CLASS 300					CLASS 600					
		ΔP=100	ΔP=150	ΔP=200	ΔP=285	ΔP=100	ΔP=150	ΔP=200	ΔP=285	ΔP=740	ΔP=150	ΔP=500	ΔP=800	ΔP=1000	ΔP=1200	ΔP=1480
2″	in-lb	434	504	584	726	504	726	770	814	929	–	–	–	–	–	–
2.5″	in-lb	460	540	620	770	540	770	823	885	1,018	–	–	–	–	–	–
3″	in-lb	584	681	779	974	681	974	1,035	1,097	1,257	866	1,208	1,549	1,788	2,027	2,354
4″	in-lb	708	832	947	1,186	832	1,186	1,248	1,319	1,478	1,402	1,887	2,372	2,797	3,230	3,814
5″	in-lb	965	1,124	1,283	1,602	1,133	1,620	1,894	2,177	2,850	–	–	–	–	–	–
6″	in-lb	1,345	1,566	1,788	2,239	1,584	2,257	2,531	2,805	3,478	3,758	4,485	5,213	6,204	7,186	8,531
8″	in-lb	2,089	2,443	2,788	3,487	2,513	3,584	4,160	4,735	6,133	7,077	8,455	9,832	11,691	13,558	16,089
10″	in-lb	3,283	3,832	4,381	5,478	4,027	5,753	6,673	7,602	9,841	11,400	13,616	15,833	18,833	21,833	25,913
12″	in-lb	5,168	6,036	6,894	8,620	6,230	8,894	10,470	12,045	15,877	17,542	20,949	24,355	28,975	33,595	39,869
14″	in-lb	6,912	8,062	9,213	11,514	8,363	11,948	14,426	16,904	22,913	–	–	–	–	–	–
16″	in-lb	8,770	10,231	11,700	14,620	10,655	15,222	18,682	22,152	30,559	–	–	–	–	–	–
18″	in-lb	12,567	14,664	16,762	20,948	15,178	21,683	27,541	33,409	47,640	–	–	–	–	–	–
20″	in-lb	16,859	19,674	22,479	28,099	20,196	28,851	37,993	47,126	69,322	–	–	–	–	–	–
24″	in-lb	25,072	29,249	33,426	41,781	30,046	42,923	56,622	70,331	103,607	–	–	–	–	–	–

METAL SEAT – TORQUE RATING (IN-LB)

SIZE	PSIG	CLASS 150				CLASS 300					CLASS 600					
		ΔP=100	ΔP=150	ΔP=200	ΔP=285	ΔP=100	ΔP=150	ΔP=200	ΔP=285	ΔP=740	ΔP=150	ΔP=500	ΔP=800	ΔP=1000	ΔP=1200	ΔP=1480
2″	in-lb	478	558	637	797	558	797	850	903	1,027	–	–	–	–	–	–
2.5″	in-lb	513	593	681	850	593	850	912	974	1,124	–	–	–	–	–	–
3″	in-lb	637	743	850	1,062	743	1,062	1,133	1,204	1,381	832	1,035	1,699	1,965	2,230	2,593
4″	in-lb	797	929	1,062	1,328	929	1,328	1,398	1,460	1,628	1,496	2,018	3,708	4,381	5,053	5,965
5″	in-lb	1,062	1,239	1,416	1,770	1,248	1,788	2,089	2,398	3,133	–	–	–	–	–	–
6″	in-lb	1,487	1,735	1,982	2,478	1,770	2,522	2,814	3,106	3,823	2,947	4,106	7,815	9,301	10,788	12,797
8″	in-lb	2,257	2,637	3,009	3,761	2,726	3,894	4,540	5,177	6,744	4,443	6,204	11,797	14,036	16,275	19,311
10″	in-lb	3,797	4,434	5,052	6,328	4646	6,638	7,584	8,531	10,824	6,558	9,151	17,417	20,718	24,019	28,506
12″	in-lb	5,947	6,938	7,930	9,912	7,558	10,797	12,302	13,815	17,470	11,001	15,364	29,223	34,772	40,321	47,843
14″	in-lb	8,655	10,098	11,540	14,426	10,841	15,488	18,196	20,904	27,488	–	–	–	–	–	–
16″	in-lb	10,965	12,797	14,620	18,275	14,249	20,355	23,691	27,037	35,143	–	–	–	–	–	–
18″	in-lb	15,718	18,337	20,957	26,196	19,514	27,878	33,949	40,029	54,782	–	–	–	–	–	–
20″	in-lb	21,081	24,594	28108	35,135	25709	36,728	45,648	54,578	76,252	–	–	–	–	–	–
24″	in-lb	31,382	36,612	41,843	52,304	38,595	55,136	67,251	79,367	108,793	–	–	–	–	–	–

SEATING AND UNSEATING TORQUE APOLLO RESILIENT SEATED BUTTERFLY VALVES

WD141, LD141, WD145, LD145, LC149 SERIES

VALVE SIZE (IN.)	DIFFERENTIAL PRESSURE (PSID)			
	50 BUSHING PTFE	100 BUSHING PTFE	150 BUSHING PTFE	200 BUSHING PTFE
2	100	106	111	117
2 1/2	150	163	176	189
3	207	220	232	244
4	290	323	357	390
5	423	481	540	598
6	599	691	783	875
8	1060	1183	1307	1430
10	1671	1872	2074	2275
12	2568	2795	3023	3250
14	2640	3070	3500	-
16	4260	4880	5500	-
18	6287	7243	8200	-
20	8360	9180	10000	-
24	15427	16813	18200	-
30	31200	32550	33930	-

All torque values shown on chart are for wet (water and other non-lubricating media) on-off service. For dry (non-lubricating, dry gas media), multiply values by 1.15. For lubed service (clean, nonabrasive lubricating media), multiply values by 0.85.
Under certain conditions, hydrodynamic torque can meet or exceed seating and unseating torques. When designing valve systems, hydrodynamic torque must be considered to help ensure correct selection of actuation.

**ALL PUBLISHED BUTTERFLY TORQUE CHARTS HAVE NO BUILT-IN SAFETY FACTORS. A PRESCRIBED 25% SAFETY FACTOR IS RECOMMENDED!*

SECTION R

REVISIONS

PAGE	DATE	DESCRIPTION
R-40	31AUG17	Removed -32A Solenoids and -32B Adapter
R-49	13APR17	Changed torque values for 2.5" & 3", standard port valves shown in table's top section (70-64x... 399-10x)
R-50, R-51	04MAY17	Added -EF torque adder
R-52	04MAY17	Added -EF torque adder
		Changed 3" & larger standard port Grafoil adders

"Apollo" Valves | INDUSTRIAL PRODUCTS

High Performance Butterfly Valves

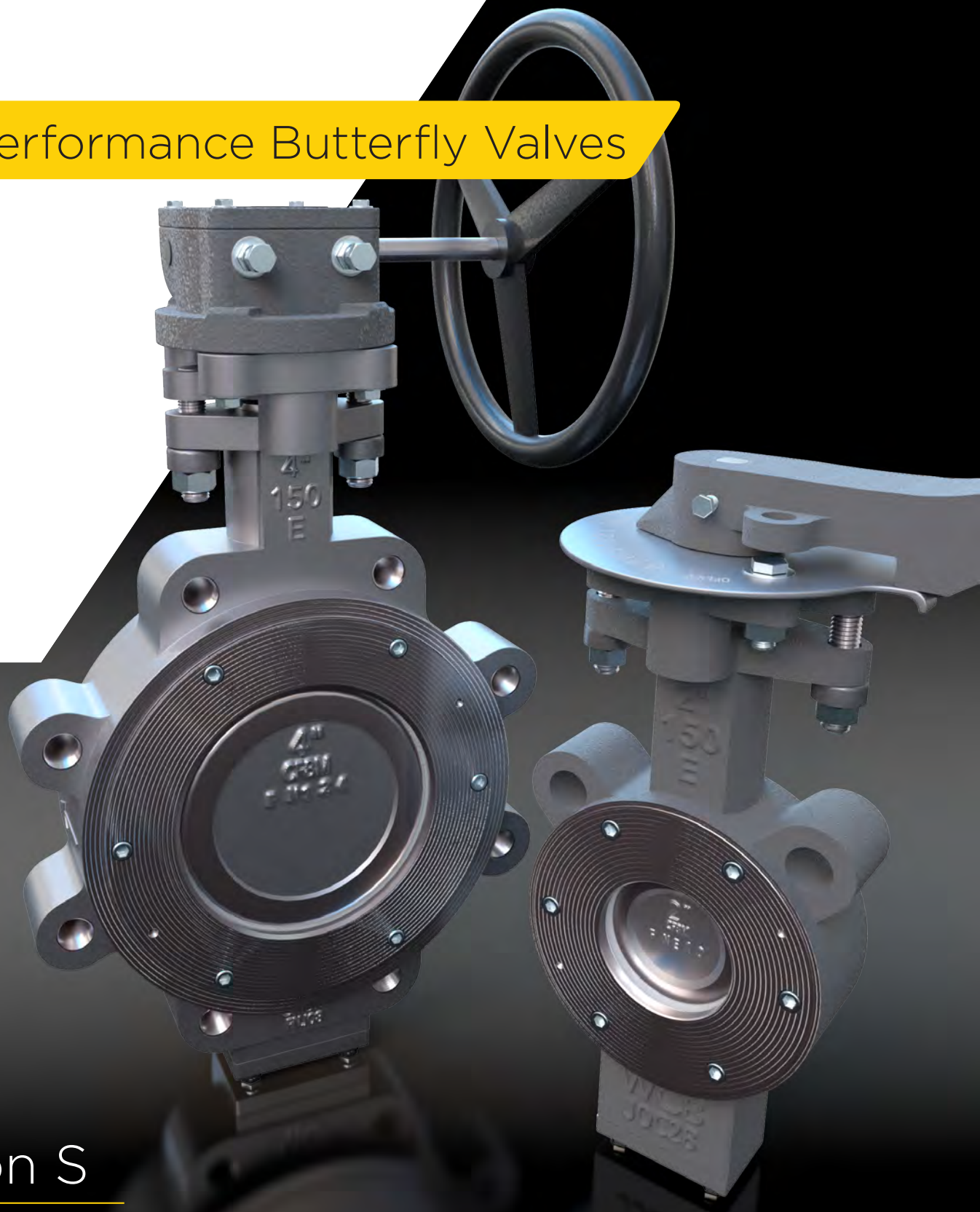

section S

SECTION S

DOUBLE OFFSET HIGH PERFORMANCE BUTTERFLY VALVES

DESCRIPTION	PAGE
STANDARD COMPLIANCE/CERTIFICATIONS	S-2
ADVANTAGES	S-3
SOFT SEAT EXPLODED VIEW	S-4
FIRE SAFE SEAT EXPLODED VIEW	S-5
METAL SEAT EXPLODED VIEW	S-6
CLASS 150 DIMENSIONS	
215L SERIES (LUG STYLE)	S-7
215W SERIES (WAFER STYLE)	S-7
CLASS 300 DIMENSIONS	
230L SERIES (LUG STYLE)	S-8
230W SERIES (WAFER STYLE)	S-8
CLASS 600 DIMENSIONS	
260L SERIES (LUG STYLE)	S-9
260W SERIES (WAFER STYLE)	S-9
HANDLE & WORM GEAR DIMENSIONS - RTFM & UHMWPE SEAT	S-10
HANDLE & WORM GEAR DIMENSIONS - FIRE SAFE & METAL SEAT	S-11
FLOW DATA	S-12
TORQUE CONSTANTS	S-13
WEIGHTS	S-14
PRESSURE TEMPERATURE RATINGS	S-15-16
HOW TO SPECIFY	S-17

STANDARDS COMPLIANCE & CERTIFICATIONS

DOUBLE OFFSET HIGH PERFORMANCE BUTTERFLY VALVES

STANDARD COMPLIANCE

- ASME B16.10 "Face to Face and End to End Dimensions of Valves"
- ASME B16.34 "Valves - Flanged, Threaded, and Welding End"
- ASME B16.5 "Pipe Flanges and Flanged Fittings"
- ANSI/FCI 70-2 "For Control Valve Seat Leakage"
- MSS SP-25 "Standard Marking System for Valves"
- MSS SP-44 "Steel Pipe Line Flanges"
- MSS SP-55 "Quality Standards for Steel Castings"
- MSS SP-61 "Pressure Testing of Steel Valves"
- MSS SP-68 "High Pressure Butterfly Valves with Offset Design"
- API 598 American Petroleum Institute - "Valve Inspection and Testing"
- API 607 - 6th Ed. American Petroleum Institute - "Fire Test for Soft Seated Valves"
- API 609 American Petroleum Institute - "Butterfly Valves: Double Flanged, Lug and Wafer Type"
- NSF/ANSI/CAN 61 "Drinking Water System Components - Health Effects" (2" - 24", Stainless 215 & 230)
- NSF/ANSI 372 "Drinking Water System Components – Lead Content" (2" - 24", Stainless 215 & 230)

CERTIFICATIONS

- CE Marking and documented valves that conform to the European Pressure Equipment Directive (PED) 97/23/EC are available in ANSI Class 150/300/600 including soft, fire safe and metal seat configurations (sizes 2"-24" only).
- CRN No. 0C17459.5CL

SERVICES

VACUUM SERVICE

- Standard Apollo high performance butterfly valves are rated for 29" Hg vacuum.

STEAM SERVICE

- The Apollo® high performance butterfly valve is well-suited for a wide range of steam applications. The application range is defined in the high performance butterfly valve pressure-temperature charts.

ADVANTAGES

DOUBLE OFFSET HIGH PERFORMANCE BUTTERFLY VALVES

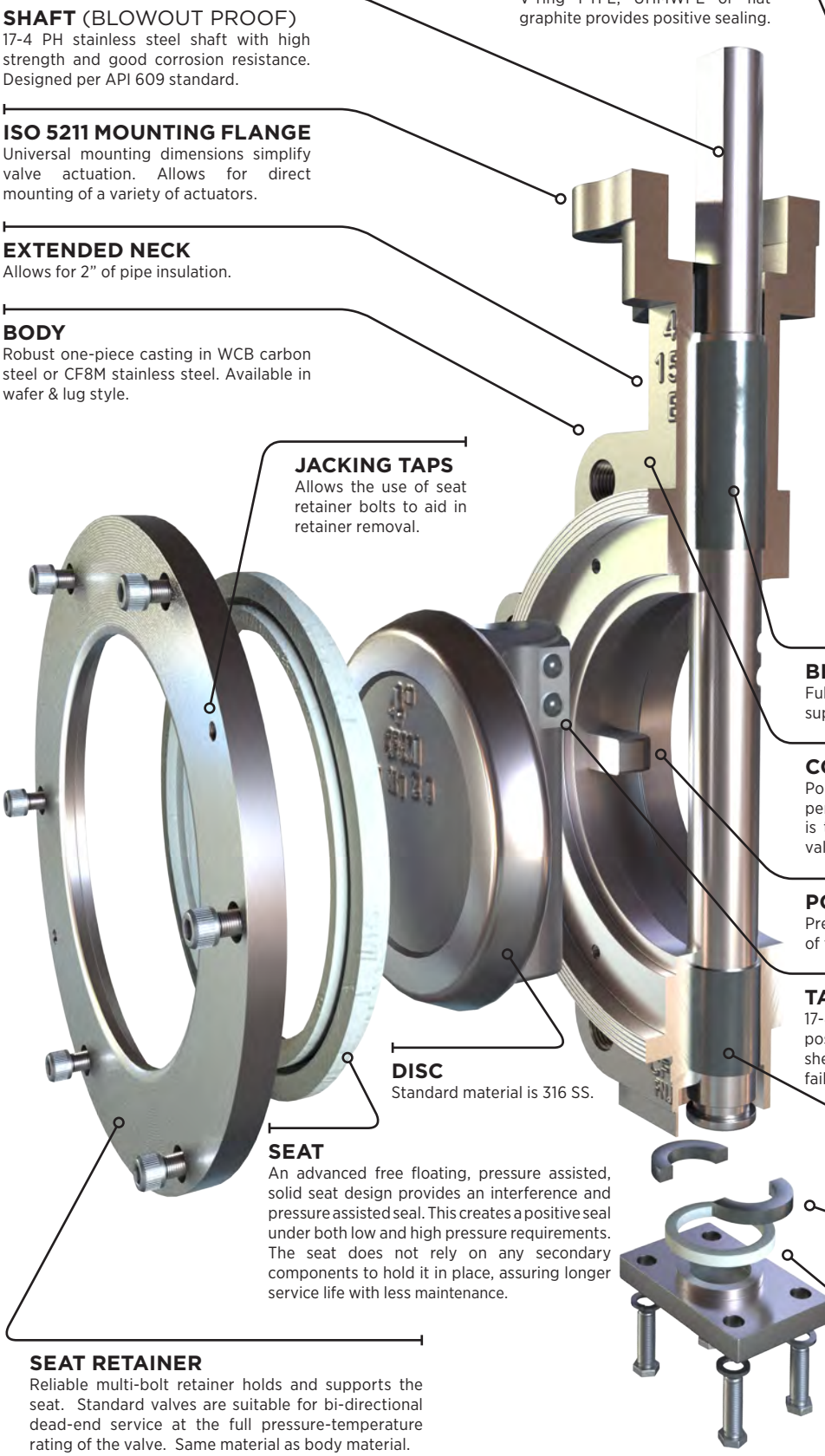

SHAFT (BLOWOUT PROOF)
17-4 PH stainless steel shaft with high strength and good corrosion resistance. Designed per API 609 standard.

ISO 5211 MOUNTING FLANGE
Universal mounting dimensions simplify valve actuation. Allows for direct mounting of a variety of actuators.

EXTENDED NECK
Allows for 2" of pipe insulation.

BODY
Robust one-piece casting in WCB carbon steel or CF8M stainless steel. Available in wafer & lug style.

SHAFT PACKING
V-ring PTFE, UHMWPE or flat graphite provides positive sealing.

ROCKER PACKING GLAND
Shaped packing gland compensates for uneven adjustment of gland nuts.

JACKING TAPS
Allows the use of seat retainer bolts to aid in retainer removal.

ANTI-EXTRUSION RING
Prevents the extrusion of shaft seals, maintaining optimum seal.

WASHERS
Disc spring washers with live loading technology featured on valves with PTFE packing.

BEARING (UPPER)
Full length provides maximum shaft support. Made of 316 SS/PTFE.

CORROSION PROTECTION
Polyamide epoxy primer with high performance polyurethane topcoat is the standard finish for carbon steel valve bodies.

POSITIVE CAST DISC STOP
Prevents seat damage from over-travel of the disc beyond the closed position.

TANGENTIAL DISC PINS
17-4 PH stainless steel disc pins are tangentially positioned, placing them in compression rather than shear. This robust joint design eliminates potential failure of the disc-stem connection.

DISC
Standard material is 316 SS.

SEAT
An advanced free floating, pressure assisted, solid seat design provides an interference and pressure assisted seal. This creates a positive seal under both low and high pressure requirements. The seat does not rely on any secondary components to hold it in place, assuring longer service life with less maintenance.

BEARING (LOWER)
Full length provides maximum stem support. Made of 316 SS/PTFE.

THRUST RING
Centers the disc. Ensures tight shutoff and long service life. Made of 316 SS.

SEAT RETAINER
Reliable multi-bolt retainer holds and supports the seat. Standard valves are suitable for bi-directional dead-end service at the full pressure-temperature rating of the valve. Same material as body material.

END CAP SEAL
Made of PTFE, UHMWPE or graphite.

MATERIALS - SOFT SEAT

CLASS 150 - 2" THRU 24", 30", 36" | CLASS 300 - 2" THRU 24" | CLASS 600 - 3" THRU 12"

STANDARD MATERIAL LIST

	PART	MATERIAL
1	Body	A351-CF8M or A216-WCB
2	Disc	A351-CF8M
3	Seat	RTFM (TFM 1700)*
4	Seat Retainer	A351-CF8M or A216-WCB
5	Seat Retainer Bolt	Stainless Steel 316
6	Stem	17-4PH
7	Disc Pin	17-4PH
8	End Cap Bolt	Stainless Steel 316
9	Washer	Stainless Steel 316
10	End Cap	A351-CF8M or A216-WCB
11	Spacer	PTFE
12	End Cap Seal	PTFE
13	Thrust Ring	Stainless Steel 316
14	Lower Bearing	Stainless Steel 316/PTFE
15	Upper Bearing	Stainless Steel 316/PTFE
16	Anti-Extrusion Ring	Stainless Steel 316
17	Stem Packing	PTFE
18	Packing Gland	Stainless Steel 316
19	Gland Nut	Stainless Steel 316
20	Washer	Stainless Steel 316
21	Disc Spring	Stainless Steel 304
22	Disc Spring Retainer	Stainless Steel 316
23	Gland Studs	Stainless Steel 316
24	Gland Plate	A351-CF8M or A216-WCB

** TFM 1700 modified PTFE is a next-generation PTFE with improved properties. Added glass further improves the seat providing greater wear resistance and a higher modulus.*

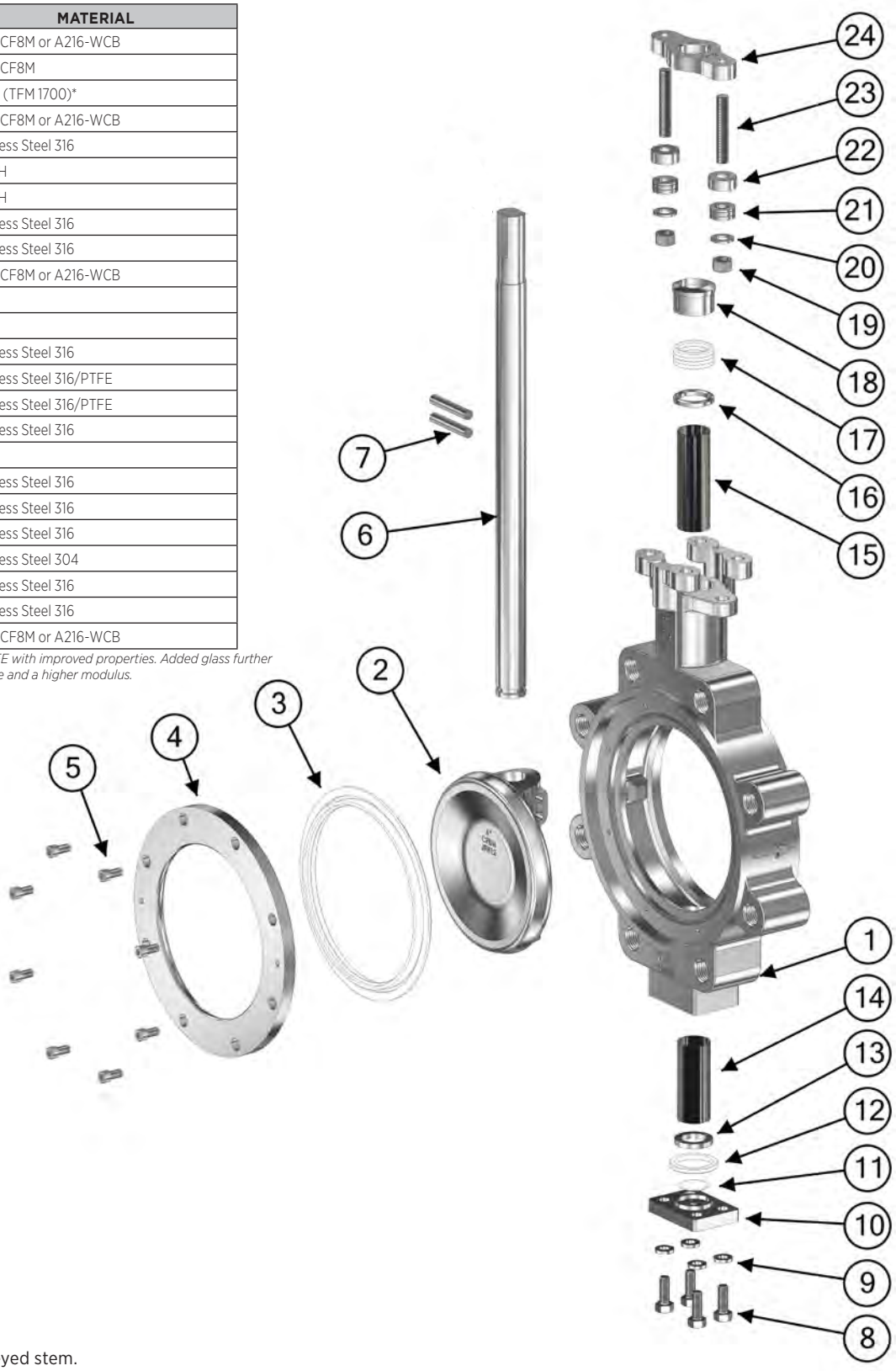

EXPLODED VIEW

LUG DESIGN SHOWN

NOTE

- Class 150 Size 10" & larger have keyed stem.
- Class 300 Size 8" & larger have keyed stem.
- Class 600 Size 6" & larger have keyed stem.

MATERIALS - FIRE SAFE SEAT

CLASS 150 - 2" THRU 24" | CLASS 300 - 2" THRU 24" | CLASS 600 - 3" THRU 12"

STANDARD MATERIAL LIST

	PART	MATERIAL
1	Body	A351-CF8M or A216-WCB
2	Disc	A351-CF8M
3	Body Seal	Graphite
4	Metal Seat	Inconel 718
5	Seat	RTFM (TFM 1700)*
6	Seat Retainer	A351-CF8M or A216-WCB
7	Seat Retainer Bolt	Stainless Steel 316
8	Stem	17-4PH
9	Disc Pin	17-4PH
10	End Cap Bolt	Stainless Steel 316
11	Washer	Stainless Steel 316
12	End Cap	A351-CF8M or A216-WCB
13	Spacer	Stainless Steel 316
14	End Cap Seal	Graphite
15	Thrust Ring	Stainless Steel 316
16	Lower Bearing	Stainless Steel 316/PTFE
17	Upper Bearing	Stainless Steel 316/PTFE
18	Anti-Extrusion Ring	Stainless Steel 316
19	Stem Packing	Graphite
20	Packing Gland	Stainless Steel 316
21	Gland Nut	Stainless Steel 316
22	Washer	Stainless Steel 316
23	Gland Studs	Stainless Steel 316
24	Gland Plate	A351-CF8M or A216-WCB

** TFM 1700 modified PTFE is a next-generation PTFE with improved properties. Added glass further improves the seat providing greater wear resistance and a higher modulus.*

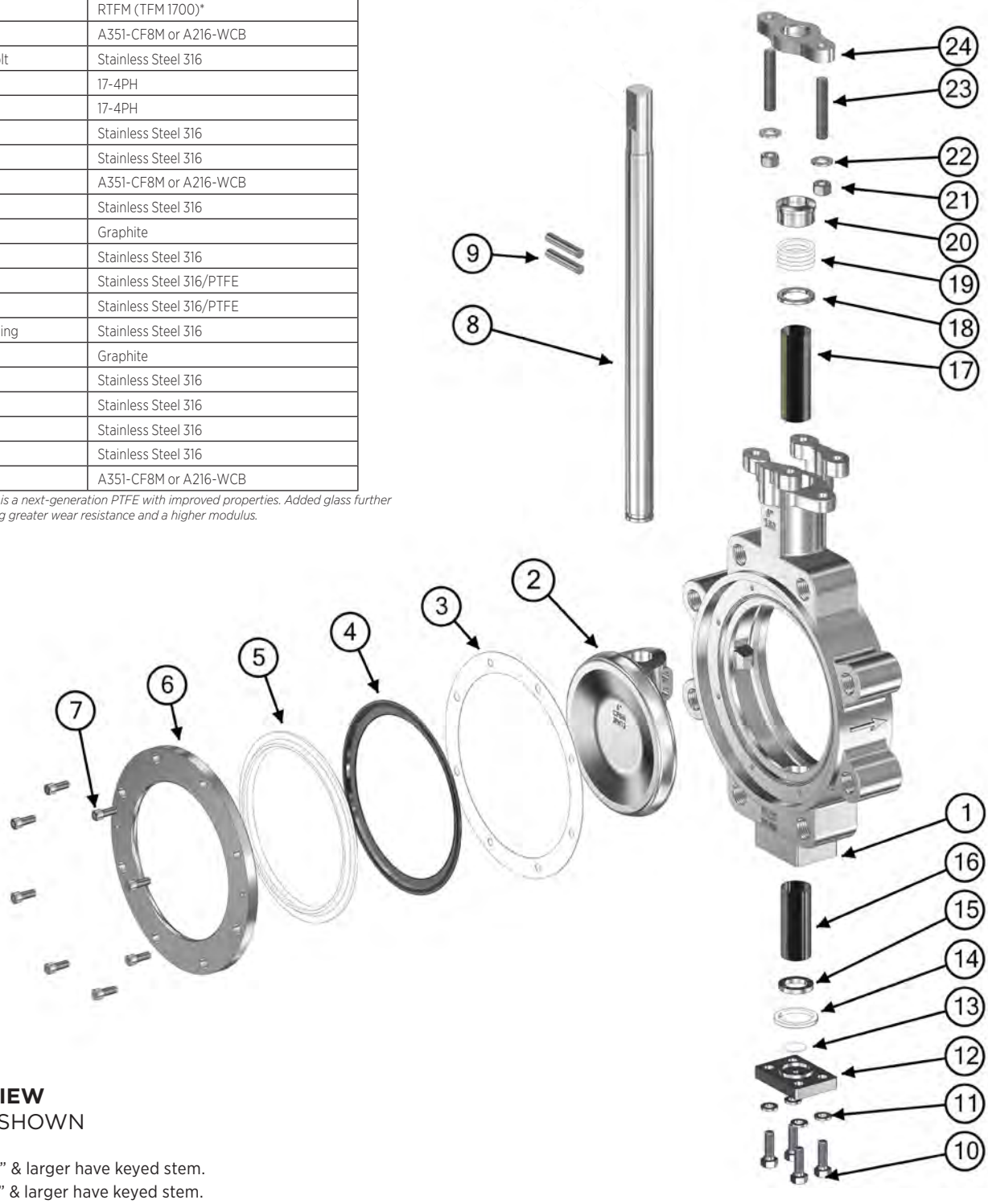

EXPLODED VIEW

LUG DESIGN SHOWN

NOTE

- Class 150 Size 10" & larger have keyed stem.
- Class 300 Size 8" & larger have keyed stem.
- Class 600 Size 6" & larger have keyed stem.

MATERIALS - METAL SEAT

CLASS 150 - 2" THRU 24" | CLASS 300 - 2" THRU 24" | CLASS 600 - 3" THRU 12"

STANDARD MATERIAL LIST

	PART	MATERIAL
1	Body	A351-CF8M or A216-WCB
2	Disc	A351-CF8M - Nitrided
3	Body Seal	Synthetic Gasket
4	Seat	Stainless Steel 316 - Nitrided
5	Seat Retainer	A351-CF8M or A216-WCB
6	Seat Retainer Bolts	Stainless Steel 316
7	Stem	17-4 PH
8	Disc Pin	17-4 PH
9	End Cap Bolt	Stainless Steel 316
10	Washer	Stainless Steel 316
11	End Cap	A351-CF8M or A216-WCB
12	Spacer	Graphite
13	End Cap Seal	Graphite
14	Thrust Ring	Stainless Steel 316
15	Lower Bearing	Stainless Steel 316 / PTFE
16	Upper Bearing	Stainless Steel 316 / PTFE
17	Anti-Extrusion Ring	Stainless Steel
18	Stem Packing	Graphite
19	Packing Gland	Stainless Steel 316
20	Gland Nut	Stainless Steel 316
21	Washer	Stainless Steel 316
22	Gland Studs	Stainless Steel 316
23	Gland Plate	A351-CF8M or A216-WCB

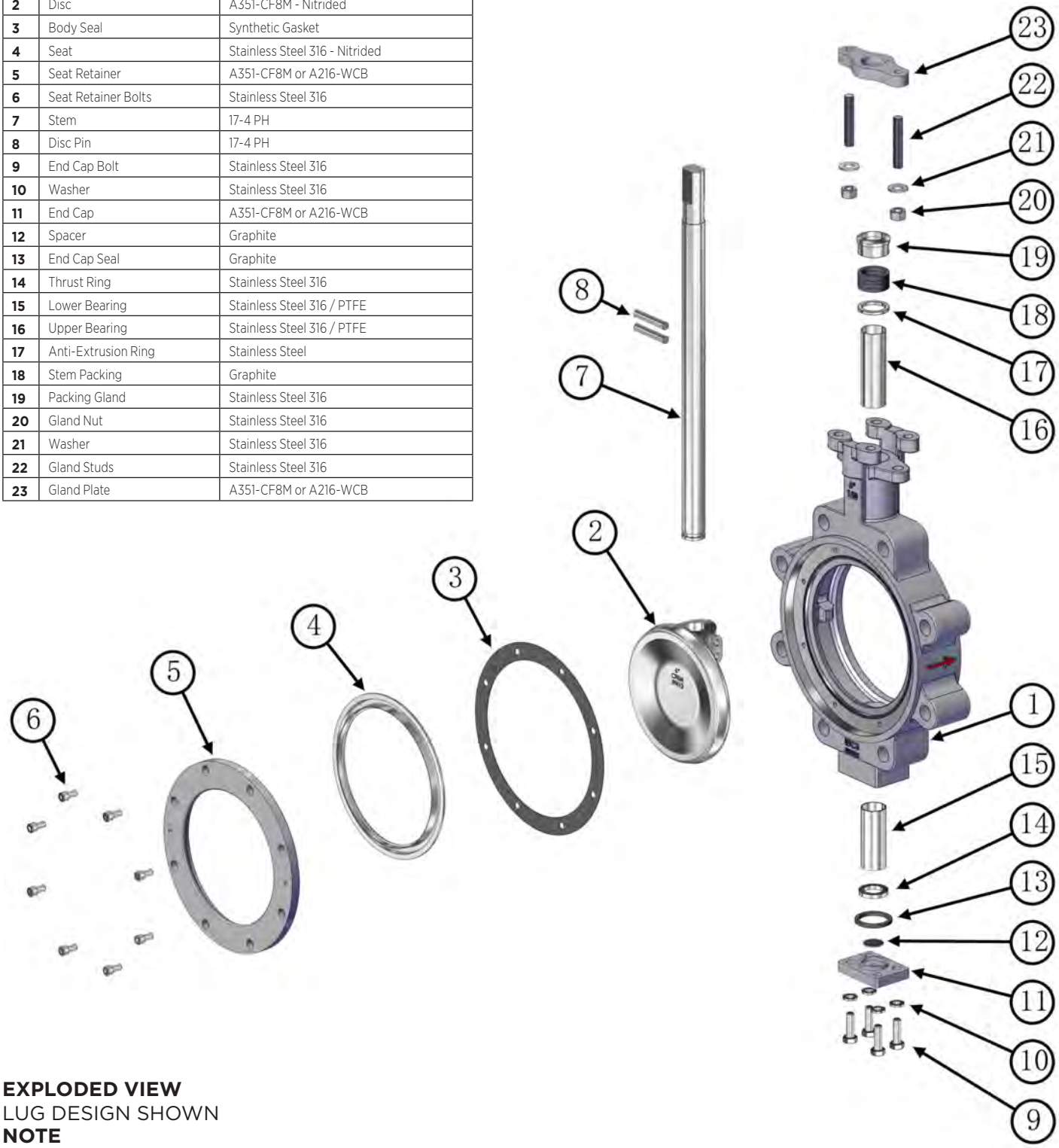

EXPLODED VIEW

LUG DESIGN SHOWN

NOTE

- Class 150 Size 10" & larger have keyed stem.
- Class 300 Size 8" & larger have keyed stem.
- Class 600 Size 6" & larger have keyed stem.

215L/215W SERIES

CLASS 150 - 2" THRU 24", 30", 36"

Four hole mounting pattern shown.
See table column "G" for number of mounting holes.

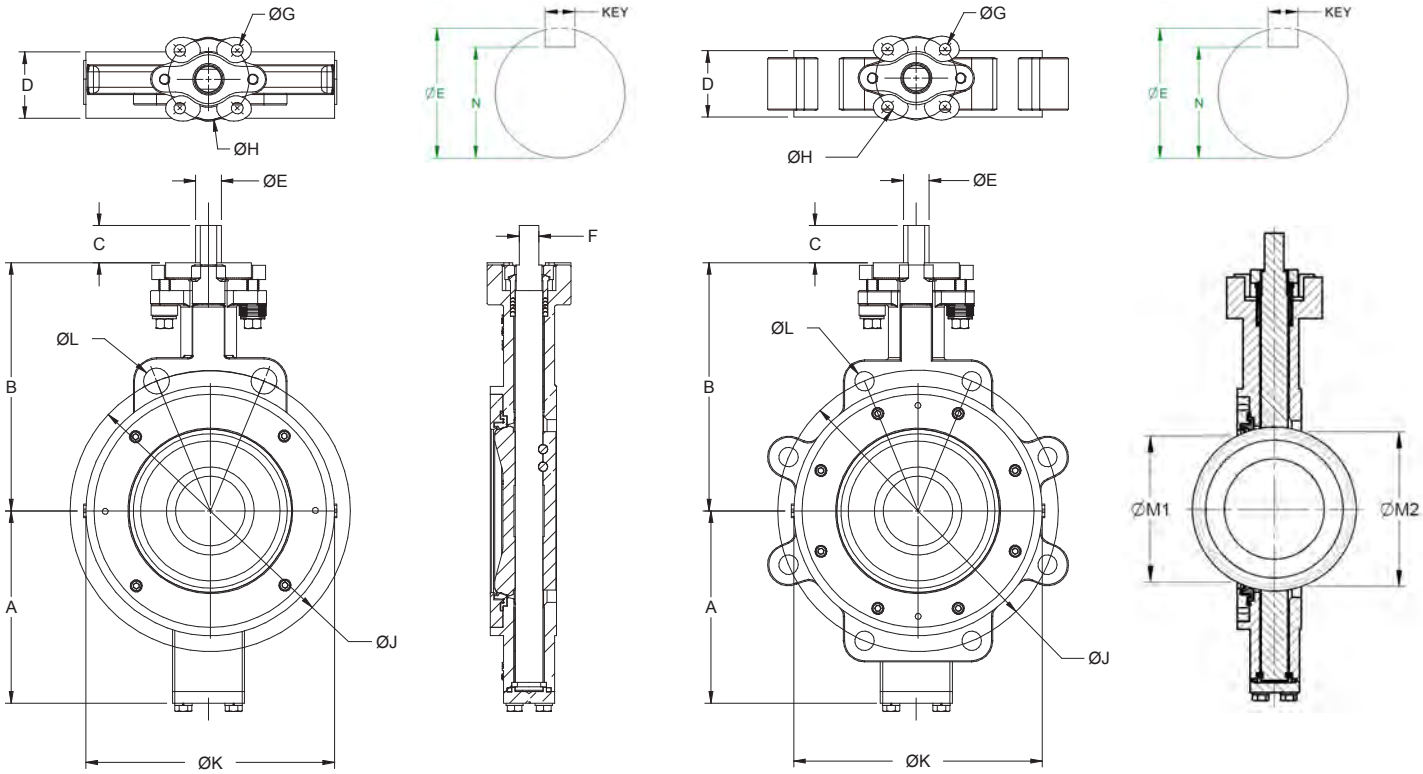

WAFER **LUG**

150 CLASS

DOUBLE-D AND KEYED STEM

SIZE (IN.)	SIZE DN	DIMENSIONS (IN.)															
		A	B	C	D	ØE	F	ØG	ØH**	ØJ	ØK	ØL WAFER	ØL LUG	ØM1	ØM2	N	KEY
2	50	3.622	5.276	1.102	1.693	0.476	0.354	4 x 0.394	2.756 (F07)	4.75	4.09	2 x 0.669	4 x 5/8"-11UNC-2B	0.50	1.64	--	--
2.5	65	4.016	5.787	1.102	1.850	0.555	0.433	4 x 0.394	2.756 (F07)	5.50	4.72	2 x 0.748	4 x 5/8"-11UNC-2B	1.48	2.06	--	--
3	80	4.331	6.142	1.102	1.890	0.555	0.433	4 x 0.394	2.756 (F07)	6.00	4.92	2 x 0.748	4 x 5/8"-11UNC-2B	1.67	2.58	--	--
4	100	4.764	7.008	1.260	2.126	0.713	0.551	4 x 0.394	2.756 (F07)	7.50	6.10	2 x 0.748	8 x 5/8"-11UNC-2B	2.76	3.46	--	--
5	125	5.591	7.598	1.260	2.244	0.874	0.669	4 x 0.394	2.756 (F07)	8.50	7.24	2 x 0.874	8 x 3/4"-10UNC-2B	3.94	4.49	--	--
6	150	6.496	8.386	1.259	2.244	0.874	0.669	4 x 0.394	2.756 (F07)	9.50	8.43	2 x 0.874	8 x 3/4"-10UNC-2B	5.02	5.46	--	--
8	200	7.165	9.449	1.260	2.520	0.992	0.748	4 x 0.551	4.921 (F12)	11.75	10.55	2 x 0.874	8 x 3/4"-10UNC-2B	6.95	7.26	--	--
10	250	8.386	10.827	2.165	2.795	1.102	--	4 x 0.551	4.921 (F12)	14.25	12.68	2 x 0.984	12 x 7/8"-9UNC-2B	8.85	9.15	0.924	0.313
12	300	10.236	12.283	2.165	3.189	1.417	--	4 x 0.551	4.921 (F12)	17.00	14.92	2 x 0.984	12 x 7/8"-9UNC-2B	10.37	10.70	1.205	0.375
14	350	11.811	13.307	2.559	3.622	1.654	--	4 x 0.709	5.512 (F14)	18.75	16.14	2 x 1.118	12 x 1"-8UNC-2B	11.89	12.25	1.406	0.437
16	400	13.307	15.354	3.150	4.016	1.969	--	4 x 0.866	6.496 (F16)	21.25	18.43	2 x 1.118	16 x 1"-8UNC-2B	13.59	13.94	1.686	0.500
18	450	14.803	16.732	3.149	4.488	1.969	--	4 x 0.866	6.496 (F16)	22.75	20.94	4 x 1.240	16 x1-1/8"-8UN-2B	15.65	15.91	1.686	0.500
20	500	15.748	17.717	3.543	5.000	2.362	--	4 x 0.866	6.496 (F16)	25.00	22.99	4 x 1-1/8"-8UN-2B	20 x 1-1/8"-8UN-2B	17.50	17.72	2.101	0.625
24	600	18.622	20.787	4.331	6.063	2.559	--	8 x 0.748	10.000 (F25)	29.50	27.24	4 x 1-1/4"-8UN-2B	20 x 1-1/4"-8UN-2B	20.94	21.01	2.253	0.750
*30	750	23.228	25.315	4.331	7.480	3.150	--	8 x 0.748	10.000 (F25)	36.00	36.42	--	28 x 1-1/4"-8UN-2B	26.22	26.28	2.775	0.875
*36	850	26.575	28.740	4.331	7.992	3.150	--	8 x 0.906	11.732 (F30)	42.75	45.28	--	32 x 1-1/2"-8UN-2B	32.29	32.35	2.775	0.875

**30" & 36" are Class 150 lug style only.*
*** ISO 5211 mounting/drilling pattern (F size) shown in parentheses.*

REV. 03DEC18

230L/230W SERIES

CLASS 300 - 2" THRU 24"

Four hole mounting pattern shown.
See table column "G" for number of mounting holes.

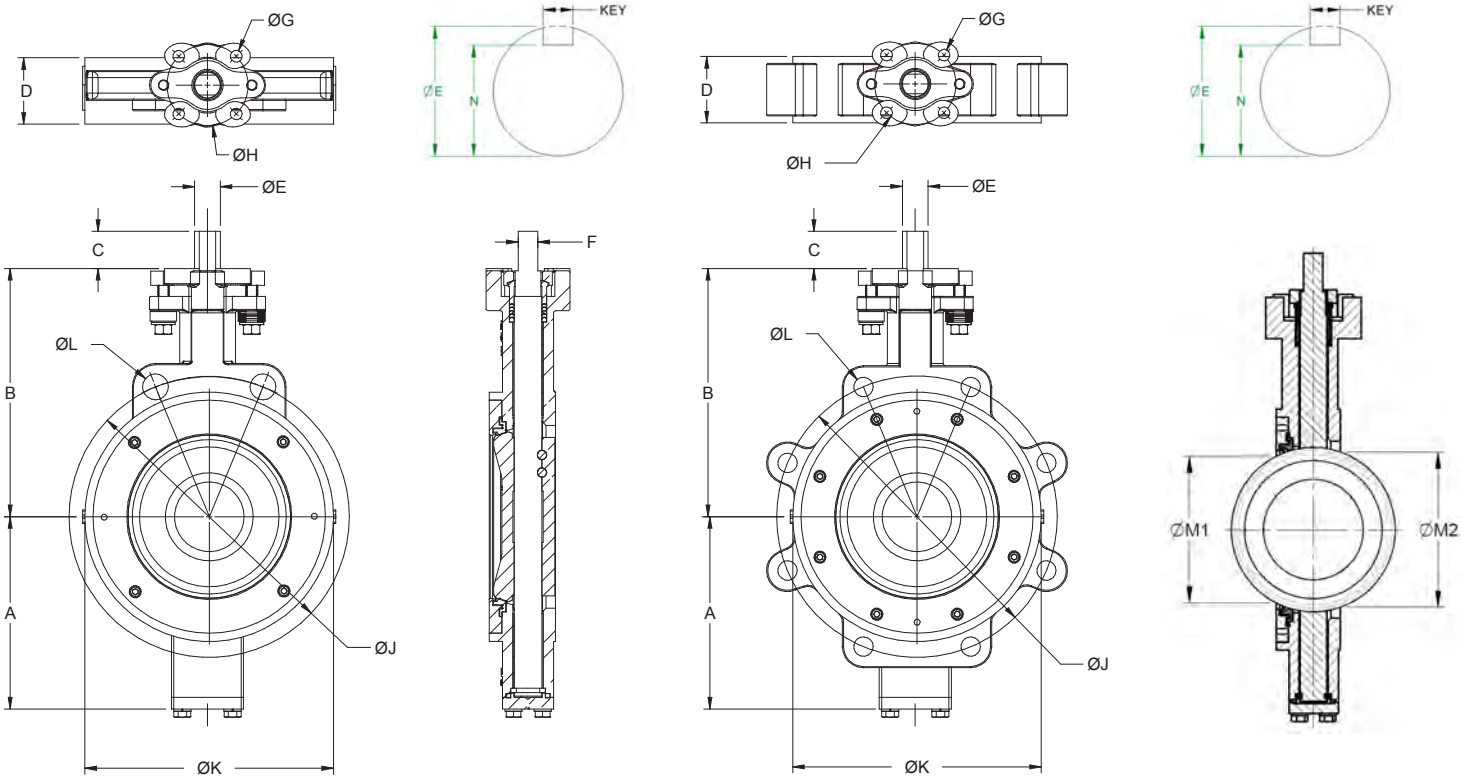

WAFER **LUG**

300 CLASS

DOUBLE-D AND KEYED STEM

SIZE (IN.)	SIZE DN	DIMENSIONS (IN.)															
		A	B	C	D	ØE	F	ØG	ØH**	ØJ	ØK	ØL WAFER	ØL LUG	ØM1	ØM2	N	KEY
2	50	3.622	5.276	1.102	1.693	0.476	0.354	4 x 0.394	2.756 (F07)	5.00	4.17	2 x 0.709	8 x 5/8"-11 UNC-2B	0.50	1.64	--	--
2.5	65	4.016	5.787	1.102	1.850	0.555	0.433	4 x 0.394	2.756 (F07)	5.88	4.72	2 x 0.874	8 x 3/4"-10 UNC-2B	1.48	2.06	--	--
3	80	4.331	6.142	1.102	1.890	0.555	0.433	4 x 0.394	2.756 (F07)	6.62	4.92	2 x 0.874	8 x 3/4"-10 UNC-2B	1.67	2.58	--	--
4	100	4.764	7.008	1.260	2.126	0.713	0.551	4 x 0.394	2.756 (F07)	7.88	6.10	2 x 0.874	8 x 3/4"-10 UNC-2B	2.76	3.46	--	--
5	125	5.591	7.598	1.260	2.244	0.874	0.669	4 x 0.472	4.016 (F10)	9.25	7.24	2 x 0.874	8 x 3/4"-10 UNC-2B	3.94	4.49	--	--
6	150	6.496	8.386	1.259	2.323	0.874	0.669	4 x 0.472	4.016 (F10)	10.62	8.43	2 x 0.874	12 x 3/4"-10 UNC-2B	4.93	5.46	--	--
8	200	8.268	10.157	2.165	2.874	1.102	--	4 x 0.551	4.921 (F12)	13.00	10.55	2 x 0.984	12 x 7/8"-9 UNC-2B	6.73	7.19	0.924	0.313
10	250	9.449	11.417	2.165	3.268	1.417	--	4 x 0.551	4.921 (F12)	15.25	12.72	4 x 1"-8UNC-2B	16 x 1"-8 UNC-2B	8.44	8.85	1.205	0.375
12	300	10.63	12.795	2.559	3.662	1.654	--	4 x 0.709	5.512 (F14)	17.75	15.04	4 x 1-1/8"-8UN-2B	16 x 1-1/8"-8 UN-2B	10.17	10.62	1.406	0.437
14	350	12.756	14.764	3.150	4.606	1.969	--	4 x 0.866	6.496 (F16)	20.25	16.14	4 x 1-1/8"-8UN-2B	20 x 1-1/8"-8 UN-2B	11.55	11.89	1.686	0.500
16	400	14.37	16.732	3.149	5.236	1.969	--	4 x 0.866	6.496 (F16)	22.50	18.43	4 x 1-1/4"-8UN-2B	20 x 1-1/4"-8 UN-2B	13.21	13.55	1.686	0.500
18	450	16.043	18.209	4.331	5.866	2.362	--	8 x 0.748	10.000 (F25)	24.75	20.94	4 x 1-1/4"-8UN-2B	24 x 1-1/4"-8 UN-2B	15.36	15.54	2.101	0.625
20	500	17.795	19.882	4.331	6.260	2.835	--	8 x 0.748	10.000 (F25)	27.00	22.99	4 x 1-1/4"-8UN-2B	24 x 1-1/4"-8 UN-2B	16.93	17.27	2.534	0.750
24	600	20.315	22.835	4.331	7.126	3.150	--	8 x 0.748	10.000 (F25)	32.00	27.24	4 x 1-1/2"-8UN-2B	24 x 1-1/2"-8 UN-2B	20.57	20.57	2.775	0.875

*** ISO 5211 mounting/drilling pattern (F size) shown in parentheses.*

REV. 03DEC18

aalberts integrated piping systems

260L/260W SERIES

CLASS 600 - 3" THRU 12"

Four hole mounting pattern shown.
See table column "G" for number of mounting holes.

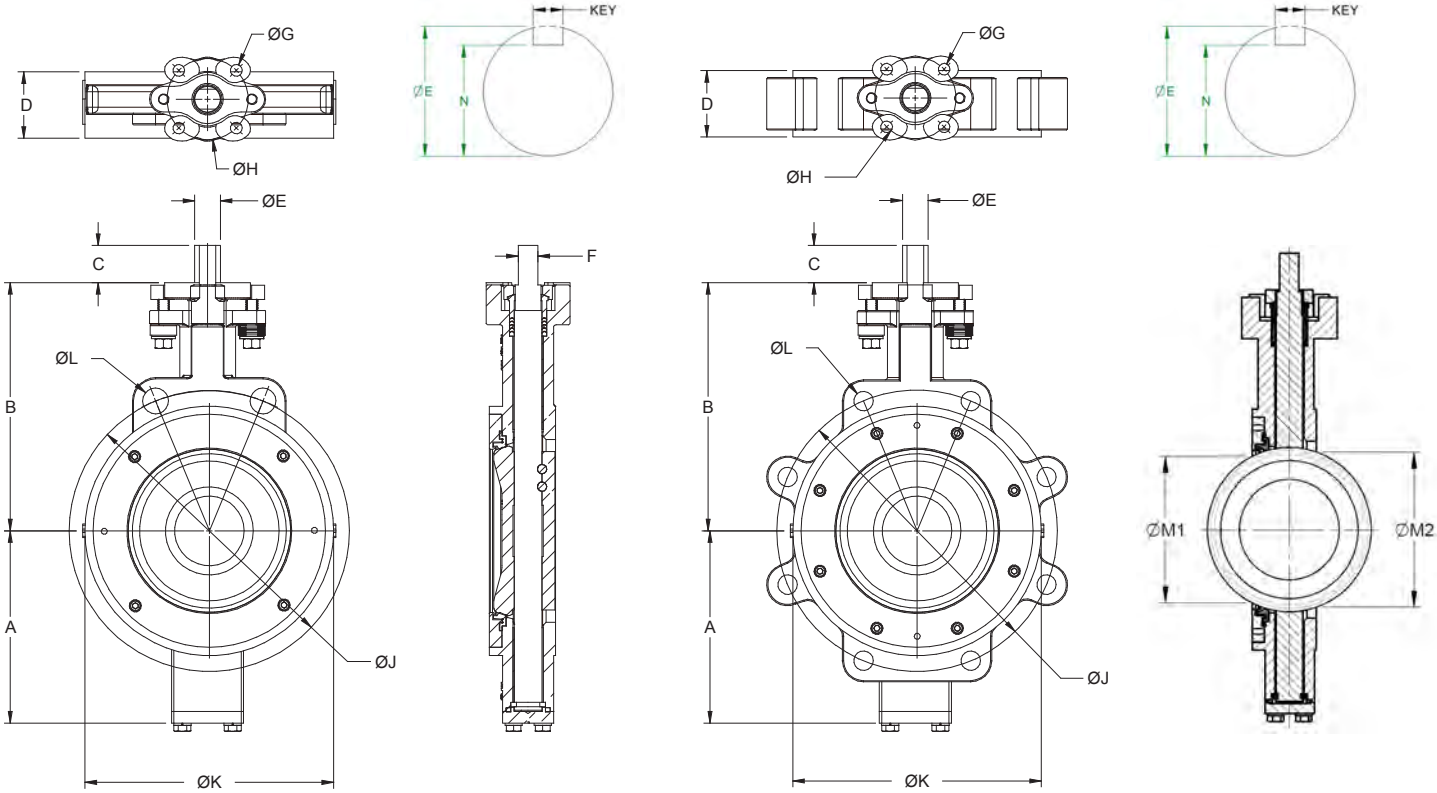

WAFER **LUG**

600 CLASS

DOUBLE-D AND KEYED STEM

SIZE (IN.)	SIZE DN	DIMENSIONS (IN.)															
		A	B	C	D	ØE	F	ØG	ØH**	ØJ	ØK	ØL WAFER	ØL LUG	ØM1	ØM2	N	KEY
3	80	4.705	6.496	1.260	2.126	0.713	0.551	4 x 0.394	2.756 (F07)	6.62	5.71	2 x 0.866	8 x 3/4"-10 UNC-2B	1.87	2.68	--	--
4	100	5.748	7.717	1.260	2.520	0.874	0.669	4 x 0.551	4.921 (F12)	8.50	6.85	2 x 0.984	8 x 7/8"-9 UNC-2B	2.79	3.37	--	--
6	150	7.953	9.724	2.165	3.071	1.417	--	4 x 0.551	4.921 (F12)	11.50	9.45	4 x 1"-8UNC-2B	12 x 1"-8 UNC-2B	4.52	5.26	1.205	0.375
8	200	9.528	11.614	3.150	4.016	1.890	--	4 x 0.906	6.496 (F16)	13.75	11.65	4 x 1-1/8"-8UN-2B	12 x 1-1/8"-8 UN-2B	6.14	6.82	1.606	0.500
10	250	11.024	13.386	3.150	4.606	1.969	--	4 x 0.906	6.496 (F16)	17.00	13.86	4 x 1-1/4"-8UN-2B	16 x 1-1/4"-8 UN-2B	7.99	8.61	1.686	0.500
12	300	12.913	15.354	4.331	5.512	2.362	--	8 x 0.709	10.000 (F25)	19.25	16.34	4 x 1-1/4"-8UN-2B	20 x 1-1/4"-8 UN-2B	9.56	10.13	2.101	0.625

(5" size not available)
*** ISO 5211 mounting/drilling pattern (F size) shown in parentheses.*

REV. 03DEC18

HANDLE & GEAR DIMENSIONS

RTFM & UHMWPE SEATS

CLASS 150

RTFM & UHMWPE SEAT

VALVE SIZE		GEAR RATIO	DIMENSIONS IN INCHES						
INCHES	DN		A	B	C	D	E	F	G
2"	50	37:1	2.24	2.11	7.87	5.9	2.09	1.14	8.82
2.5"	65	37:1	2.24	2.11	7.87	5.9	2.09	1.14	8.82
3"	80	37:1	2.24	2.11	7.87	5.9	2.09	1.14	8.82
4"	100	37:1	2.24	2.11	7.87	5.9	2.09	1.14	12.82
5"	125	37:1	2.24	2.11	7.87	5.9	2.09	1.14	12.82
6"	150	37:1	2.24	2.11	7.87	5.9	2.09	1.14	12.82
8"	200	37:1	2.76	2.11	10.94	11.81	2.09	1.50	22.00
10"	250	37:1	2.76	2.11	10.94	11.81	2.09	1.50	22.00
12"	300	34:1	3.43	2.50	12.87	11.81	2.80	1.59	22.00
14"	350	55:1	4.06	4.39	13.07	15.75	4.11	1.93	–
16"	400	55:1	4.06	4.39	13.07	15.75	4.11	1.93	–
18"	450	55:1	4.06	4.39	13.07	15.75	4.11	1.93	–
20"	500	55:1	4.06	4.39	13.07	15.75	4.11	1.93	–
24"	600	52:1	4.96	4.92	13.11	15.75	5.12	2.40	–
30"	750	280:1	6.65	7.48	18.90	24.00	7.00	3.54	–
36"	850	360:1	8.15	9.06	20.90	24.00	8.26	4.29	

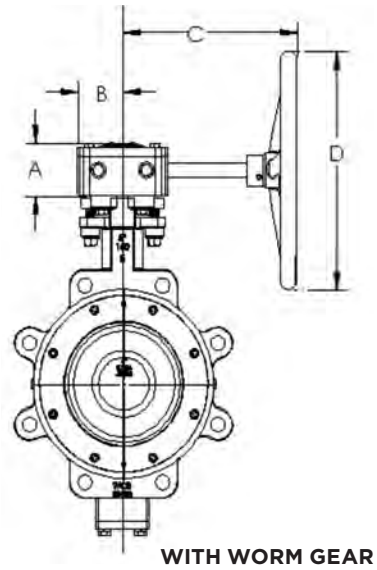

WITH WORM GEAR

CLASS 300

RTFM & UHMWPE SEAT

VALVE SIZE		GEAR RATIO	DIMENSIONS (IN.)						
INCHES	DN		A	B	C	D	E	F	G
2"	50	37:1	2.24	2.11	7.87	5.9	2.09	1.14	8.82
2.5"	65	37:1	2.24	2.11	7.87	5.9	2.09	1.14	8.82
3"	80	37:1	2.24	2.11	7.87	5.9	2.09	1.14	8.82
4"	100	37:1	2.24	2.11	7.87	5.9	2.09	1.14	12.82
5"	125	37:1	2.76	2.11	10.94	11.81	2.09	1.50	12.82
6"	150	37:1	2.76	2.11	10.94	11.81	2.09	1.50	12.82
8"	200	34:1	3.43	2.50	12.87	11.81	2.80	1.59	22.00
10"	250	34:1	3.43	2.50	12.87	11.81	2.80	1.59	22.00
12"	300	55:1	4.06	4.39	13.07	15.75	4.11	1.93	–
14"	350	55:1	4.06	4.39	13.07	15.75	4.11	1.93	–
16"	400	55:1	4.06	4.39	13.07	15.75	4.11	1.93	–
18"	450	52:1	4.96	4.92	13.11	15.75	5.12	2.40	–
20"	500	280:1	6.65	7.48	18.90	24.00	7.00	3.54	–
24"	600	280:1	6.65	7.48	18.90	24.00	7.00	3.54	–

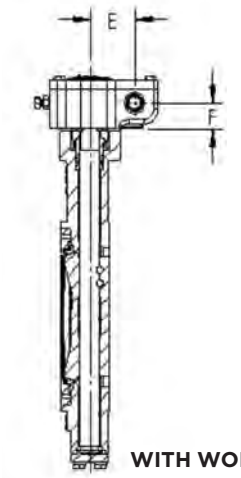

WITH WORM GEAR

CLASS 600

RTFM SEAT

VALVE SIZE		GEAR RATIO	DIMENSIONS (IN.)					
INCHES	DN		A	B	C	D	E	F
3"	80	37:1	2.24	2.11	7.87	5.9	2.09	1.14
4"	100	37:1	2.76	2.11	10.94	11.81	2.09	1.50
6"	150	34:1	2.76	2.11	10.94	11.81	2.09	1.50
8"	200	55:1	4.06	4.39	13.07	15.75	4.11	1.93
10"	250	55:1	4.06	4.39	13.07	15.75	4.11	1.93
12"	300	52:1	4.96	4.92	13.11	15.75	5.12	2.40

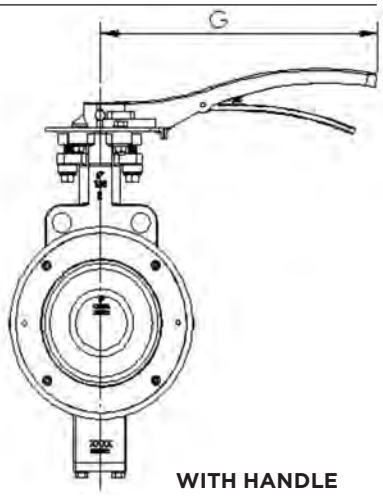

WITH HANDLE

aalberts integrated piping systems

HANDLE & GEAR DIMENSIONS

FIRE SAFE & METAL SEAT

CLASS 150

FIRE SAFE & METAL SEAT

VALVE SIZE		GEAR RATIO	DIMENSIONS (IN.)						
INCHES	DN		A	B	C	D	E	F	G
2"	50	37:1	2.24	2.11	7.87	5.9	2.09	1.14	8.82
2.5"	65	37:1	2.24	2.11	7.87	5.9	2.09	1.14	8.82
3"	80	37:1	2.24	2.11	7.87	5.9	2.09	1.14	8.82
4"	100	37:1	2.24	2.11	7.87	5.9	2.09	1.14	12.82
5"	125	37:1	2.24	2.11	7.87	5.9	2.09	1.14	12.82
6"	150	37:1	2.24	2.11	7.87	5.9	2.09	1.14	12.82
8"	200	37:1	2.76	2.11	10.94	11.81	2.09	1.50	22.00
10"	250	34:1	3.43	2.50	12.87	11.81	2.80	1.59	22.00
12"	300	55:1	4.06	4.39	13.07	15.75	4.11	1.93	22.00
14"	350	55:1	4.06	4.39	13.07	15.75	4.11	1.93	–
16"	400	55:1	4.06	4.39	13.07	15.75	4.11	1.93	–
18"	450	52:1	4.96	4.92	13.11	15.75	5.12	2.40	–
20"	500	52:1	4.96	4.92	13.11	15.75	5.12	2.40	–
24"	600	280:1	6.65	7.48	18.90	24.00	7.00	3.54	–

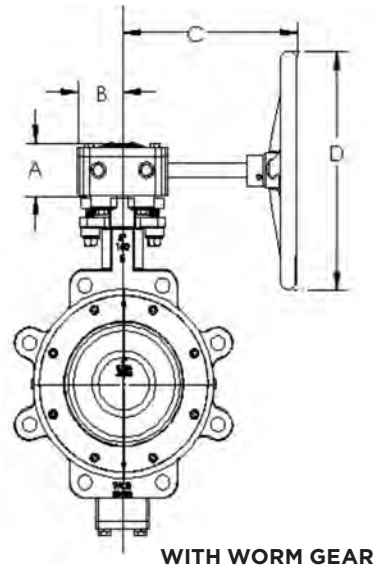

WITH WORM GEAR

CLASS 300

FIRE SAFE & METAL SEAT

VALVE SIZE		GEAR RATIO	DIMENSIONS (IN.)						
INCHES	DN		A	B	C	D	E	F	G
2"	50	37:1	2.24	2.11	7.87	5.9	2.09	1.14	8.82
2.5"	65	37:1	2.24	2.11	7.87	5.9	2.09	1.14	8.82
3"	80	37:1	2.24	2.11	7.87	5.9	2.09	1.14	8.82
4"	100	37:1	2.24	2.11	7.87	5.9	2.09	1.14	12.82
5"	125	37:1	2.76	2.11	10.94	11.81	2.09	1.50	12.82
6"	150	37:1	2.76	2.11	10.94	11.81	2.09	1.50	12.82
8"	200	34:1	3.43	2.50	12.87	11.81	2.80	1.59	22.00
10"	250	55:1	4.06	4.39	13.07	15.75	4.11	1.93	22.00
12"	300	55:1	4.06	4.39	13.07	15.75	4.11	1.93	–
14"	350	52:1	4.96	4.92	13.11	15.75	5.12	2.40	–
16"	400	52:1	4.96	4.92	13.11	15.75	5.12	2.40	–
18"	450	280:1	6.65	7.48	18.90	24.00	7.00	3.54	–
20"	500	280:1	6.65	7.48	18.90	24.00	7.00	3.54	–
24"	600	360:1	8.15	9.06	20.90	24.00	8.26	4.29	

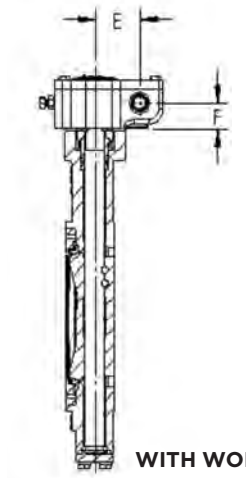

WITH WORM GEAR

CLASS 600

FIRE SAFE & METAL SEAT

VALVE SIZE		GEAR RATIO	DIMENSIONS (IN.)					
INCHES	DN		A	B	C	D	E	F
3"	80	37:1	2.24	2.11	7.87	5.9	2.09	1.14
4"	100	34:1	3.43	2.50	12.87	11.81	2.80	1.59
6"	150	55:1	4.06	4.39	13.07	15.75	4.11	1.93
8"	200	55:1	4.06	4.39	13.07	15.75	4.11	1.93
10"	250	52:1	4.96	4.92	13.11	15.75	5.12	2.40
12"	300	280:1	8.86	5.91	15.04	24.00	9.02	3.23

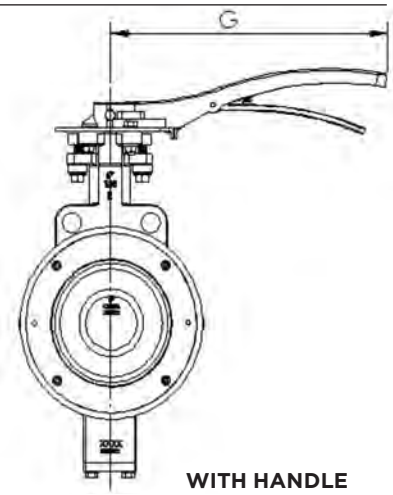

WITH HANDLE

FLOW DATA

DOUBLE OFFSET HIGH PERFORMANCE BUTTERFLY VALVES

Cv values (US gallons per minute) represent the flow of 60°F water through a 100% open valve at a pressure drop of 1 psi.

The metric equivalent, Kv, is the flow of water at 16°C through the valve in cubic meters per hour at a pressure drop of 1 kg/cm2.
To convert Cv to Kv, multiply the Cv by 0.8569.

RATED FLOW COEFFICIENT (CV)

215L/215W

SIZE		CLASS	ANGLE OF DISC OPENING (DEGREES)								
INCHES	DN		10°	20°	30°	40°	50°	60°	70°	80°	90°
2"	50	150	1	12	26	40	47	49	50	51	62
2.5"	65	150	4	19	47	63	78	78	84	95	110
3"	80	150	3	25	52	74	87	100	123	145	157
4"	100	150	6	44	82	119	156	196	240	266	284
5"	125	150	14	71	131	168	209	280	368	479	512
6"	150	150	20	108	198	272	380	501	651	803	831
8"	200	150	54	251	390	559	780	1043	1385	1747	1838
10"	250	150	84	382	580	827	1174	1612	2202	2803	2811
12"	300	150	119	553	874	1230	1733	2371	3274	4178	4205
14"	350	150	163	632	955	1383	1813	2855	3944	5219	5564
16"	400	150	250	879	1334	1916	2781	3939	5530	6984	7091
18"	450	150	388	1136	1681	2433	3526	4981	6843	8631	9127
20"	500	150	463	1390	2052	2985	4363	6280	8900	11803	12613
24"	600	150	710	2159	3312	4750	6881	9926	14336	19656	20596
30"	750	150	1107	2602	3603	5556	8721	13216	20376	28285	31500
36"	900	150	1692	3391	4917	7914	12744	20021	31640	45241	51233

RATED FLOW COEFFICIENT (CV)

230L/230W

SIZE		CLASS	ANGLE OF DISC OPENING (DEGREES)								
INCHES	DN		10°	20°	30°	40°	50°	60°	70°	80°	90°
2"	50	300	1	12	26	40	47	49	50	51	62
2.5"	65	300	4	19	47	63	78	78	84	95	110
3"	80	300	3	25	52	74	87	100	123	145	157
4"	100	300	6	44	82	119	156	196	240	266	284
5"	125	300	14	71	131	168	209	280	368	479	512
6"	150	300	20	108	198	272	380	501	651	803	831
8"	200	300	47	206	319	420	595	843	1106	1463	1502
10"	250	300	81	344	524	720	1014	1399	1821	2205	2413
12"	300	300	117	506	728	1019	1449	2044	2717	3456	3575
14"	350	300	161	603	898	1208	1754	2493	3294	4129	4603
16"	400	300	164	766	1172	1560	2275	3287	4301	5550	6646
18"	450	300	274	809	1320	1791	2803	4051	5603	7193	8946
20"	500	300	394	1100	1624	2274	3392	5075	6818	8906	11003
24"	600	300	318	1728	2462	3518	5222	7613	10323	13596	16430

RATED FLOW COEFFICIENT (CV)

260L/260W

SIZE		CLASS	ANGLE OF DISC OPENING (DEGREES)								
INCHES	DN		10°	20°	30°	40°	50°	60°	70°	80°	90°
3"	80	600	2	25	61	82	84	89	94	107	126
4"	100	600	6	42	96	138	140	149	163	197	230
6"	150	600	17	110	225	281	291	336	402	497	578
8"	200	600	43	231	424	524	528	621	731	913	1076
10"	250	600	61	335	597	772	876	1049	1281	1623	1891
12"	300	600	82	484	875	1108	1223	1498	1821	2341	2740

- *This chart should be used as a general guide.*
- *Cv = the volume of water in U.S. gallons per minute that will pass through a given valve opening with a pressure drop of 1 psig at room temperature.*

TORQUE CONSTANTS

DOUBLE OFFSET HIGH PERFORMANCE BUTTERFLY VALVES

RTFM & UHMWPE SEAT

TORQUE RATING (IN-LB)

SIZE	PSIG	CLASS 150				CLASS 300					CLASS 600					
		ΔP=100	ΔP=150	ΔP=200	ΔP=285	ΔP=100	ΔP=150	ΔP=200	ΔP=285	ΔP=740	ΔP=150	ΔP=500	ΔP=800	ΔP=1000	ΔP=1200	ΔP=1480
2"	in-lb	204	230	266	332	248	332	381	425	531	–	–	–	–	–	–
2.5"	in-lb	239	283	319	398	301	398	443	478	575	–	–	–	–	–	–
3"	in-lb	257	301	345	434	327	434	487	540	664	407	513	841	974	1,106	1,283
4"	in-lb	398	469	531	664	469	664	761	867	1,106	620	841	1,540	1,823	2,106	2,487
5"	in-lb	558	655	743	929	620	885	1,062	1,239	1,664	–	–	–	–	–	–
6"	in-lb	726	850	974	1,212	858	1,221	1,505	1,779	2,460	974	1,363	2,593	3,089	3,575	4,248
8"	in-lb	1,328	1,549	1,770	2,213	1,646	2,354	2,921	3,487	4,868	1,912	2,673	5,080	6,045	7,009	8,319
10"	in-lb	2,213	2,575	2,947	3,682	2,575	3,682	4,691	5,699	8,142	3,177	4,437	8,434	10,036	11,638	13,806
12"	in-lb	2,867	3,345	3,823	4,779	3,629	5,177	6,522	7,877	11,151	4,788	6,682	12,709	15,116	17,523	20,798
14"	in-lb	4,938	5,761	6,584	8,231	6,053	8,646	11,186	13,735	19,913	–	–	–	–	–	–
16"	in-lb	6,903	8,054	9,204	11,505	8,461	12,080	14,788	17,496	24,072	–	–	–	–	–	–
18"	in-lb	9,717	11,337	12,956	16,196	11,903	17,010	20,461	23,913	32,303	–	–	–	–	–	–
20"	in-lb	12,930	15,089	17,240	21,550	15,842	22,629	26,816	30,993	41,153	–	–	–	–	–	–
24"	in-lb	19,859	23,169	26,479	33,099	24,329	34,754	40,595	46,436	60,623	–	–	–	–	–	–
30"	in-lb	30,090	35,400	40,710	49,472	–	–	–	–	–	–	–	–	–	–	–
36"	in-lb	48,233	58,145	68,057	84,849	–	–	–	–	–	–	–	–	–	–	–

FIRE SAFE SEAT

TORQUE RATING (IN-LB)

SIZE	PSIG	CLASS 150				CLASS 300					CLASS 600					
		ΔP=100	ΔP=150	ΔP=200	ΔP=285	ΔP=100	ΔP=150	ΔP=200	ΔP=285	ΔP=740	ΔP=150	ΔP=500	ΔP=800	ΔP=1000	ΔP=1200	ΔP=1480
2"	in-lb	434	504	584	726	504	726	770	814	929	–	–	–	–	–	–
2.5"	in-lb	460	540	620	770	540	770	823	885	1,018	–	–	–	–	–	–
3"	in-lb	584	681	779	974	681	974	1,035	1,097	1,257	866	1,208	1,549	1,788	2,027	2,354
4"	in-lb	708	832	947	1,186	832	1,186	1,248	1,319	1,478	1,402	1,887	2,372	2,797	3,230	3,814
5"	in-lb	965	1,124	1,283	1,602	1,133	1,620	1,894	2,177	2,850	–	–	–	–	–	–
6"	in-lb	1,345	1,566	1,788	2,239	1,584	2,257	2,531	2,805	3,478	3,758	4,485	5,213	6,204	7,186	8,531
8"	in-lb	2,089	2,443	2,788	3,487	2,513	3,584	4,160	4,735	6,133	7,077	8,455	9,832	11,691	13,558	16,089
10"	in-lb	3,283	3,832	4,381	5,478	4,027	5,753	6,673	7,602	9,841	11,400	13,616	15,833	18,833	21,833	25,913
12"	in-lb	5,168	6,036	6,894	8,620	6,230	8,894	10,470	12,045	15,877	17,542	20,949	24,355	28,975	33,595	39,869
14"	in-lb	6,912	8,062	9,213	11,514	8,363	11,948	14,426	16,904	22,913	–	–	–	–	–	–
16"	in-lb	8,770	10,231	11,700	14,620	10,655	15,222	18,682	22,152	30,559	–	–	–	–	–	–
18"	in-lb	12,567	14,664	16,762	20,948	15,178	21,683	27,541	33,409	47,640	–	–	–	–	–	–
20"	in-lb	16,859	19,674	22,479	28,099	20,196	28,851	37,993	47,126	69,322	–	–	–	–	–	–
24"	in-lb	25,072	29,249	33,426	41,781	30,046	42,923	56,622	70,331	103,607	–	–	–	–	–	–

METAL SEAT

TORQUE RATING (IN-LB)

SIZE	PSIG	CLASS 150				CLASS 300					CLASS 600					
		ΔP=100	ΔP=150	ΔP=200	ΔP=285	ΔP=100	ΔP=150	ΔP=200	ΔP=285	ΔP=740	ΔP=150	ΔP=500	ΔP=800	ΔP=1000	ΔP=1200	ΔP=1480
2"	in-lb	478	558	637	797	558	797	850	903	1,027	–	–	–	–	–	–
2.5"	in-lb	513	593	681	850	593	850	912	974	1,124	–	–	–	–	–	–
3"	in-lb	637	743	850	1,062	743	1,062	1,133	1,204	1,381	832	1,035	1,699	1,965	2,230	2,593
4"	in-lb	797	929	1,062	1,328	929	1,328	1,398	1,460	1,628	1,496	2,018	3,708	4,381	5,053	5,965
5"	in-lb	1,062	1,239	1,416	1,770	1,248	1,788	2,089	2,398	3,133	–	–	–	–	–	–
6"	in-lb	1,487	1,735	1,982	2,478	1,770	2,522	2,814	3,106	3,823	2,947	4,106	7,815	9,301	10,788	12,797
8"	in-lb	2,257	2,637	3,009	3,761	2,726	3,894	4,540	5,177	6,744	4,443	6,204	11,797	14,036	16,275	19,311
10"	in-lb	3,797	4,434	5,052	6,328	4646	6,638	7,584	8,531	10,824	6,558	9,151	17,417	20,718	24,019	28,506
12"	in-lb	5,947	6,938	7,930	9,912	7,558	10,797	12,302	13,815	17,470	11,001	15,364	29,223	34,772	40,321	47,843
14"	in-lb	8,655	10,098	11,540	14,426	10,841	15,488	18,196	20,904	27,488	–	–	–	–	–	–
16"	in-lb	10,965	12,797	14,620	18,275	14,249	20,355	23,691	27,037	35,143	–	–	–	–	–	–
18"	in-lb	15,718	18,337	20,957	26,196	19,514	27,878	33,949	40,029	54,782	–	–	–	–	–	–
20"	in-lb	21,081	24,594	28108	35,135	25709	36,728	45,648	54,578	76,252	–	–	–	–	–	–
24"	in-lb	31,382	36,612	41,843	52,304	38,595	55,136	67,251	79,367	108,793	–	–	–	–	–	–

- *Under certain conditions, hydrodynamic torque can meet or exceed seating and unseating torques. When designing valve systems, hydrodynamic torque must be considered to help ensure correct selection of actuation.*
- *All published double offset High Performance Butterfly Valve torque charts have a 10% safety factor included.*

WEIGHTS

DOUBLE OFFSET HIGH PERFORMANCE BUTTERFLY VALVES

RTFM & UHMWPE SEAT

VALVE SIZE		CLASS 150		CLASS 300		CLASS 600	
INCHES	DN	WAFER LB (KG)	LUG LB (KG)	WAFER LB (KG)	LUG LB (KG)	WAFER LB (KG)	LUG LB (KG)
2″	50	9.2 (4.2)	10.9 (5.0)	9.2 (4.2)	12.2 (5.5)	–	–
2.5″	65	11.7 (5.3)	13.0 (5.9)	11.7 (5.3)	15.4 (7.0)	–	–
3″	80	12.4 (5.6)	14.2 (6.4)	12.4 (5.6)	17.7 (8.0)	18.2 (8.2)	22.5 (10.2)
4″	100	17.9 (8.1)	23.5 (10.7)	18.0 (8.2)	25.7 (11.6)	31.5 (14.3)	41.1 (18.6)
5″	125	24.0 (10.9)	31.0 (14.1)	25.3 (11.5)	34.9 (15.8)	–	–
6″	150	30.6 (13.9)	38.0 (17.2)	32.4 (14.7)	47.0 (21.2)	71.4 (32.4)	90.6 (41.1)
8″	200	46.7 (21.2)	56.3 (25.5)	60.0 (27.2)	82.8 (37.5)	136.6 (62.0)	167.1 (75.8)
10″	250	68.5 (31.1)	86.4 (39.2)	96.8 (43.9)	129.5 (58.7)	200.2 (90.8)	279.8(126.9)
12″	300	104.2 (47.3)	133.0 (60.3)	143.4 (65.0)	189.0 (85.7)	325.0 (147.4)	452.3 (205.2)
14″	350	138.7 (62.9)	183.3 (83.1)	218.0 (98.9)	325.0 (147.4)	–	–
16″	400	206.9 (93.8)	273.6 (124.1)	309.1 (140.2)	443.9 (201.4)	–	–
18″	450	278.9 (126.5)	340.6 (154.5)	438.7 (199.0)	634.7 (288.0)	–	–
20″	500	357.2 (162.0)	440.8 (199.9)	575.0 (260.8)	782.7 (355.0)	–	–
24″	600	574.3 (260.5)	709.4 (321.8)	840.2 (381.1)	1,201.9 (545.2)	–	–
30″	750	–	1,392.6 (633.0)	–	–	–	–
36″	850	–	2,142.8 (974.0)	–	–	–	–

FIRE SAFE & METAL SEAT

VALVE SIZE		CLASS 150		CLASS 300		CLASS 600	
INCHES	DN	WAFER LB (KG)	LUG LB (KG)	WAFER LB (KG)	LUG LB (KG)	WAFER LB (KG)	LUG LB (KG)
2″	50	9.3 (4.2)	11.0 (5.0)	9.3 (4.2)	12.2 (5.5)	–	–
2.5″	65	11.8 (5.3)	13.0 (5.9)	11.8 (5.3)	15.5 (7.0)	–	–
3″	80	12.4 (5.6)	14.3 (6.5)	12.4 (5.6)	17.8 (8.1)	18.3 (8.3)	22.6 (10.2)
4″	100	18.0 (8.2)	23.6 (10.7)	18.1 (8.2)	25.8 (11.7)	31.7 (14.4)	41.3 (18.7)
5″	125	24.1 (10.9)	31.2 (14.1)	25.4 (11.5)	35.0 (15.9)	–	–
6″	150	30.8 (14.0)	38.2(17.3)	32.6 (14.8)	46.9 (21.3)	71.7 (32.5)	91.1 (41.3)
8″	200	47.0 (21.3)	56.6 (25.7)	60.3 (27.3)	83.1 (37.7)	137.3 (62.3)	168.0 (76.2)
10″	250	68.8 (31.2)	86.8 (39.4)	97.2 (44.1)	130.0 (59.0)	201.2 (91.3)	281.2 (127.5)
12″	300	104.8 (47.5)	133.6 (60.6)	143.9 (65.3)	189.8 (86.1)	326.7 (148.2)	454.6 (206.2)
14″	350	139.4 (63.3)	184.2 (83.5)	218.9 (99.3)	326.3 (148.0)		–
16″	400	207.9 (94.3)	275.0 (124.7)	310.3 (140.7)	445.7 (202.2)	–	–
18″	450	280.2 (127.1)	342.3 (155.3)	440.5 (199.8)	637.2 (289.0)	–	–
20″	500	359.0 (162.8)	443.0 (200.9)	577.3 (261.8)	785.9 (356.5)	–	–
24″	600	577.2 (261.8)	712.9 (323.4)	843.5 (382.62)	1,206.7 (547.4)	–	–

PRESSURE/TEMPERATURE RATINGS

DOUBLE OFFSET HIGH PERFORMANCE BUTTERFLY VALVES

CLASS 150

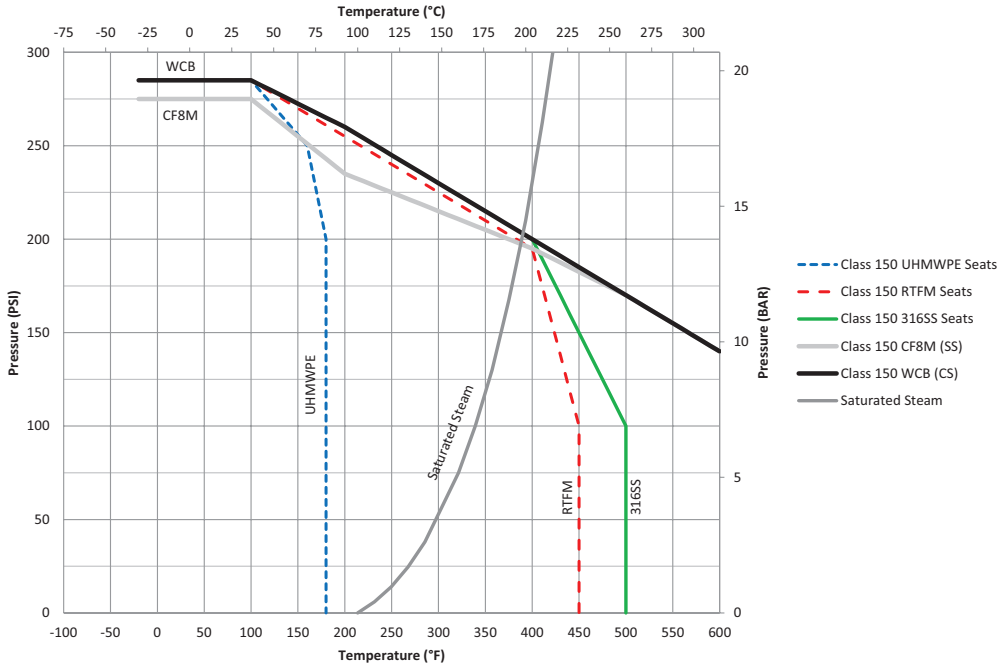

CLASS 300

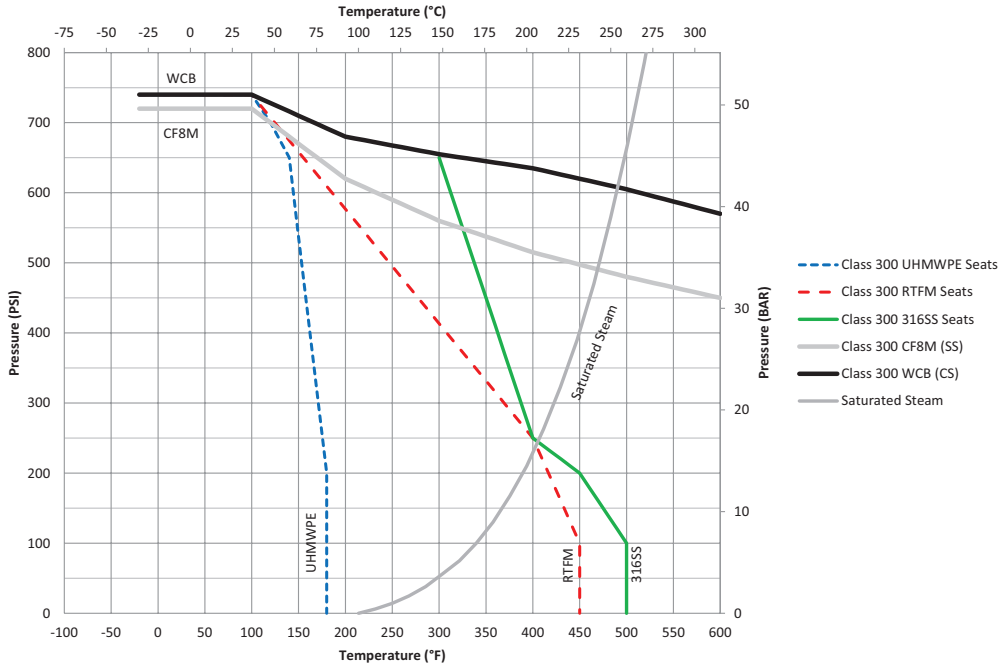

REV. 20JUL16

PRESSURE/TEMPERATURE RATINGS

DOUBLE OFFSET HIGH PERFORMANCE BUTTERFLY VALVES

CLASS 600

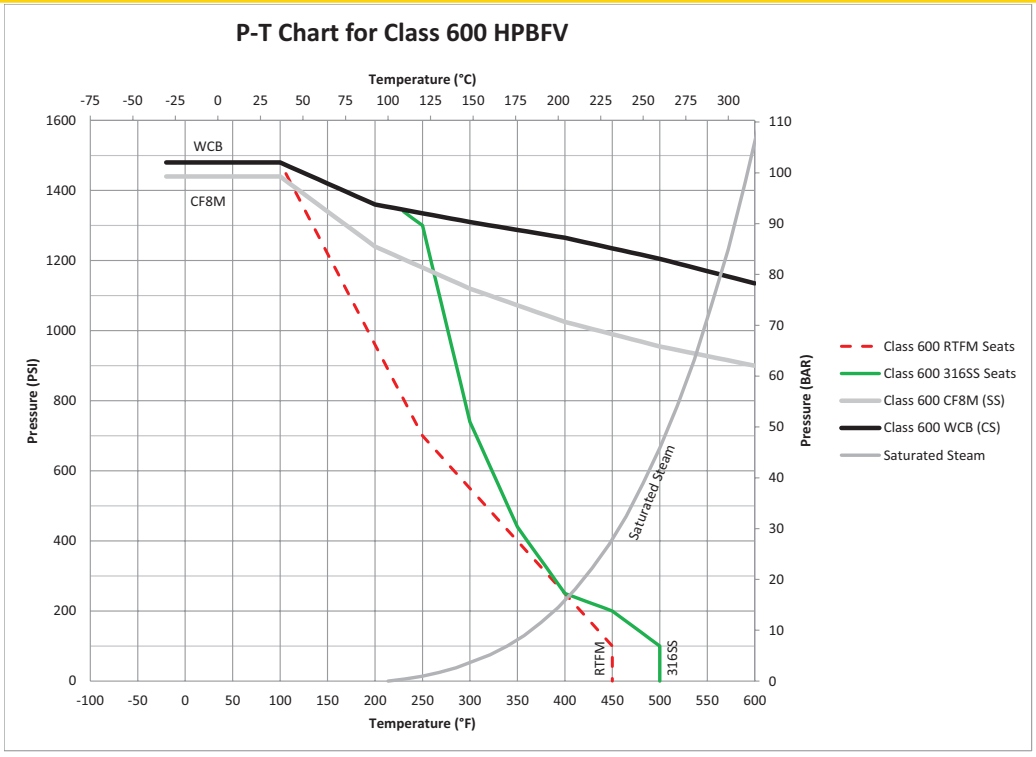

REV. 20JUL16

aalberts integrated piping systems

HOW TO SPECIFY

DOUBLE OFFSET HIGH PERFORMANCE BUTTERFLY VALVES

2	15	L	06	C	S	P	8T	A	0
VALVE TYPE	CLASS	VALVE STYLE	SIZE	BODY MATERIAL	DISC MATERIAL	STEM & PIN MATERIAL	SEAT MATERIAL	SPECIAL SERVICE	OPERATOR
2 - DOUBLE OFFSET	15 (150)	L - LUG	02 (2")	**CARBON STEEL**	**STAINLESS STEEL**	P - 17-4 PH SS	8T - RTFM (TFM 1700 W/GLASS)	A - STANDARD APOLLO	0 - BARE STEM
	30 (300)	W - WAFER	25 (2.5")	C - A216 WCB	S - A351 CF8M (316 SS)				1 - LEVER OPERATOR[4]
	60 (600)[1]		03 (3")						2 - WORM GEAR OPERATOR
			04 (4")			A - ALLOY 20	2F - TFM/INCONEL, GRAPHITE SEALS (FIRE SAFE)		
			05 (5")	**STAINLESS STEEL**	A - A351 CN7M (ALLOY 20)	B - 317 SS			5 - WORM GEAR OPERATOR W/ CHAIN WHEEL
			06 (6")	S - A351 CF8M (316 SS)		H - HASTELLOY® C			
			08 (8")		B - A351 CG8M (317 SS)	J - DUPLEX	2M - 316SS (METAL SEATED)		
			10 (10")			K - SUPER DUPLEX			7 - LOCKING WORM GEAR OPERATOR
			12 (12")	A - A351 CN7M (ALLOY 20)	J - A995 CD3MN (2205 DUPLEX)		21 - UHMWPE[3]		
			14 (14")			M - MONEL®			8 - LOCKING WORM GEAR OPERATOR W/ CHAIN WHEEL
			16 (16")	B - A351 CG8M (317 SS)	K - A995 CD3MWCUN (2507 SUPER DUPLEX)	S - 316 SS			
			18 (18")						
			20 (20")	J - A995 CD3MN (2205 DUPLEX)					
			24 (24")						
			30 (30")[2]	K - A995 CD3MWCUN (2507 SUPER DUPLEX)	**NICKEL ALLOYS**				
			36 (36")[2]		H - A494 CW12MW (HASTELLOY® C)				
					M - A494 M-35-1 (MONEL®)				
				NICKEL ALLOYS					
				H - A494 CW12MW (HASTELLOY® C)					
				M - A494 M-35-1 (MONEL®)					

EXAMPLE: 215L06CSP8TA0 = 6" Class 150 Lug, Carbon Steel Body, SS Disc, 17-4 PH Stem, TFM 1700 Seats, Standard Service, Bare Stem

( ) Represents close wrought equivalent
[1] Class 600 valves available in sizes 3" through 12" (excluding 5" size)
[2] 215L Only
[3] UHMWPE not available in Class 600
[4] Standard handle can be locked in the full open or fully closed position.
Lever operators are available with 2"-12" class 150 valves (215), and 2"-10" class 300 valves (230)
See table for Lever Handle Availability & Maximum Differential Pressure

Safety Warning:

Gear operators are normally specified for larger high performance butterfly valves because the force of the pipeline flow on the disc can be too great to safely use a handle.

LEVER HANDLE AVAILABILITY & MAXIMUM DIFFERENTIAL PRESSURE

			SOFT SEAT (CODES: 8T & 21)		FIRE-SAFE SEAT (CODE: 2F)		METAL SEAT (CODE: 2M)	
			PSI	BAR	PSI	BAR	PSI	BAR
Class 150	215	2"-6"	Full Rating		Full Rating		Full Rating	
		8"	150	10.3	Not Available		Not Available	
		10"-12"	50	3.4	Not Available		Not Available	
Class 300	230	2"-4"	Full Rating		Full Rating		Full Rating	
		6"-8"	150	10.3	Not Available		Not Available	
		10"	50	3.4	Not Available		Not Available	

REV. 04MAY17

SECTION S

REVISIONS

PAGE	DATE	DESCRIPTION
S-6	20JUL16	Added metal seat exploded view page
S-7 THRU S-9	03DEC18	Added keyed shaft drawing and dimensions to Column N
	20JUL16	Added disc cord drawing and dimensions to Columns ØM1 & ØM2
	25APR16	Added bolt hole count to Column G and ISO mounting pattern designation to Column H
S-10 THRU S-11	05SEP18	Updated handwheel dimensions
S-12	05SEP18	Updated 215/230/260 flow coefficients (Cv)
S-13	20JUL16	Added metal seat torque rating table
S-14 THRU S-16	20JUL16	Updated pressure temperature rating charts
S-17	04MAY17	Clarified body & disc material
	20JUL16	Updated seat material list
	09MAY16	Clarified lever operator footnote. Added safety warning for 8" and larger valves.
	20APR16	Added additional stem material list and updated specification note 3